ANL/FPP-80-1

STARFIRE

A COMMERCIAL TOKAMAK
FUSION POWER PLANT STUDY

VOLUME II

Distribution Category:
Magnetic Fusion Energy
(UC-20)

ANL/FPP-80-1
Volume II

ARGONNE NATIONAL LABORATORY
9700 South Cass Avenue
Argonne, Illinois 60439

STARFIRE - A COMMERCIAL TOKAMAK FUSION POWER PLANT STUDY

Argonne National Laboratory

McDonnell Douglas Astronautics Co. - East

General Atomic Company

The Ralph M. Parsons Company

September 1980

The facilities of Argonne National Laboratory are owned by the United States Government. Under the terms of a contract (W-31-109-Eng-38) among the U. S. Department of Energy, Argonne Universities Association and The University of Chicago, the University employs the staff and operates the Laboratory in accordance with policies and programs formulated, approved and reviewed by the Association.

MEMBERS OF ARGONNE UNIVERSITIES ASSOCIATION

The University of Arizona
Carnegie-Mellon University
Case Western Reserve University
The University of Chicago
University of Cincinnati
Illinois Institute of Technology
University of Illinois
Indiana University
The University of Iowa
Iowa State University
The University of Kansas
Kansas State University
Loyola University of Chicago
Marquette University
The University of Michigan
Michigan State University
University of Minnesota
University of Missouri
Northwestern University
University of Notre Dame
The Ohio State University
Ohio University
The Pennsylvania State University
Purdue University
Saint Louis University
Southern Illinois University
The University of Texas at Austin
Washington University
Wayne State University
The University of Wisconsin-Madison

NOTICE

This report was prepared as an account of work sponsored by an agency of the United States Government. Neither the United States Government or any agency thereof, nor any of their employees, make any warranty, express or implied, or assume any legal liability or responsibility for the accuracy, completeness, or usefulness of any information, apparatus, product, or process disclosed, or represent that its use would not infringe privately owned rights. Reference herein to any specific commercial product, process, or service by trade name, mark, manufacturer, or otherwise, does not necessarily constitute or imply its endorsement, recommendation, or favoring by the United States Government or any agency thereof. The views and opinions of authors expressed herein do not necessarily state or reflect those of the United States Government or any agency thereof.

Printed in the United States of America
Available from
National Technical Information Service
U. S. Department of Commerce
5285 Port Royal Road
Springfield, VA 22161

NTIS price codes
Printed copy: A99
Microfiche copy: A01

Table of Contents

****Volume I*****

Chapter		Page
1	INTRODUCTION	1-1
2	STARFIRE OVERVIEW	
	2.1 INTRODUCTION	2-1
	2.2 KEY ASSUMPTIONS	2-5
	2.3 REACTOR OVERVIEW	2-6
	2.4 BALANCE OF PLANT	2-69
	2.5 PLANT CONSTRUCTION	2-77
	2.6 OPERATION AND MAINTENANCE	2-77
	2.7 POWER FLOW	2-83
	2.8 ECONOMICS	2-83
	2.9 SAFETY	2-86
3	STUDY CONCLUSIONS	
	3.1 INTRODUCTION	3-1
	3.2 STEADY STATE	3-2
	3.3 IMPURITY CONTROL AND EXHAUST	3-2
	3.4 ENERGY CONVERSION	3-3
	3.5 ECONOMICS AND MAINTAINABILITY	3-5
	3.6 SAFETY	3-6
4	TABLE OF DESIGN PARAMETERS	
5	RATIONALE FOR KEY DESIGN SELECTIONS	
	5.1 INTRODUCTION	5-1
	5.2 PLASMA BURN MODE (STEADY STATE)	5-2
	5.3 IMPURITY CONTROL AND EXHAUST	5-7
	5.4 CHOICE OF BREEDER AND COOLANT	5-8
	5.5 KEY REACTOR PARAMETERS	5-21
	5.6 DESIGN CONFIGURATION	5-33
6	PLASMA ENGINEERING	
	6.1 SUMMARY AND INTRODUCTION	6-1
	6.2 MHD EQUILIBRIUM AND STEADY STATE OPERATING POINT	6-4
	6.3 BURN CYCLE	6-32

Table of Contents (Continued)

Chapter		Page
7	PLASMA HEATING AND CURRENT DRIVE SYSTEM	
	7.1 LOWER-HYBRID CURRENT DRIVE THEORY	7-1
	7.2 WAVEGUIDE ANTENNA THEORY	7-18
	7.3 RF SYSTEM DESIGN	7-29
	7.4 LOWER-HYBRID HEATING AND CURRENT DRIVE FOR STARTUP	7-45
8	PLASMA IMPURITY CONTROL AND EXHAUST (LIMITER/VACUUM SYSTEM	
	8.1 INTRODUCTION	8-1
	8.2 REFERENCE DESIGN SUMMARY	8-4
	8.3 PLASMA ENGINEERING FOR THE LIMITER/VACUUM SYSTEM	8-16
	8.4 LIMITER ENGINEERING	8-38
	8.5 VACUUM SYSTEM	8-110
9	MAGNETS	
	9.1 INTRODUCTION	9-1
	9.2 TOROIDAL FIELD COIL SYSTEM	9-2
	9.3 EQUILIBRIUM FIELD COILS AND OHMIC HEATING COILS	9-46
	9.4 CORRECTION FIELD COILS	9-59
	9.5 MAGNET SAFETY	9-61
10	FIRST-WALL/BLANKET	
	10.1 MATERIALS SELECTION AND PROPERTIES	10-10
	10.2 MECHANICAL DESIGN	10-57
	10.3 TRITIUM RECOVERY	10-86
	10.4 NEUTRONIC ANALYSIS	10-105
	10.5 THERMAL-HYDRAULIC ANALYSES	10-154
	10.6 STRESS ANALYSIS AND LIFETIME MODELS	10-185
	10.7 ELECTROMAGNETIC EFFECTS ON THE FIRST WALL AND BLANKET	10-222
	10.8 SAFETY	10-227
	10.9 REFERENCE FIRST-WALL/BLANKET DESIGN	10-232

Table of Contents (Continued)

Chapter		Page
11	RADIATION SHIELDING AND VACUUM BOUNDARY	
	11.1 INTRODUCTION	11-1
	11.2 BULK SHIELD	11-2
	11.3 PENETRATION SHIELD	11-26
	11.4 SHIELD MECHANICAL DESIGN	11-44
	****Volume II****	
12	RADIOACTIVITY	
	12.1 INTRODUCTION	12-1
	12.2 COMPONENT ACTIVATION	12-4
	12.3 MATERIAL RECYCLING	12-27
	12.4 DECAY AFTERHEAT	12-38
	12.5 REACTOR ROOM ATMOSPHERIC ACTIVATION	12-44
13	HEAT TRANSPORT AND ENERGY CONVERSION	
	13.1 INTRODUCTION AND SUMMARY	13-1
	13.2 FIRST WALL/BLANKET PRIMARY LOOPS	13-2
	13.3 LIMITER FEEDWATER LOOP	13-11
	13.4 RESIDUAL HEAT REMOVAL LOOP	13-14
14	TRITIUM SYSTEMS	
	14.1 INTRODUCTION	14-1
	14.2 PARAMETRIC ANALYSIS	14-1
	14.3 FUEL PROCESSING	14-6
	14.4 TRITIUM IN THE COOLANTS	14-8
	14.5 ATMOSPHERIC TRITIUM RECOVERY (ATR) SCENARIOS	14-11
	14.6 TRITIUM FACILITY	14-20
	14.7 TRITIUM REFERENCE PARAMETERS	14-24
	14.8 CONCLUSIONS	14-24
15	ELECTRICAL STORAGE AND POWER SUPPLIES	
	15.1 INTRODUCTION AND GENERAL SEQUENCE OF OPERATION	15-1
	15.2 TOROIDAL FIELD COIL POWER SYSTEM	15-2
	15.3 CORRECTION FIELD COIL POWER SYSTEM	15-3
	15.4 EQUILIBRIUM FIELD COIL POWER SYSTEMS	15-6

Table of Contents (Continued)

Chapter		Page
	15.5 OHMIC HEATING COIL POWER SYSTEM	15-7
	15.6 ELECTRON-CYCLOTRON-RESONANCE-HEATING SYSTEM	15-9
	15.7 LOWER HYBRID RADIO-FREQUENCY HEATING POWER SYSTEM	15-9
16	SUPPORT STRUCTURE	
	16.1 INTRODUCTION AND SUMMARY	16-1
	16.2 DESIGN CONSIDERATIONS	16-4
	16.3 SUPPORT STRUCTURE REFERENCE DESIGN	16-7
	16.4 STRUCTURAL ANALYSES	16-23
17	CRYOGENICS	
	17.1 INTRODUCTION AND SUMMARY	17-1
	17.2 CRYOGENIC REQUIREMENTS	17-3
	17.3 CRYOGENIC SYSTEM DESCRIPTION	17-4
18	INSTRUMENTATION AND CONTROL	
	18.1 INTRODUCTION AND SCOPE	18-1
	18.2 TECHNOLOGY PROJECTION	18-1
	18.3 STARFIRE REQUIREMENTS	18-13
	18.4 STARFIRE I&C CONCEPTUAL DESIGN	18-19
	18.5 PROBLEM AREAS	18-27
19	MAINTENANCE AND OPERATION	
	19.1 SUMMARY	19-1
	19.2 PLANT OPERATION	19-3
	19.3 MAINTENANCE	19-14
	19.4 PERSONNEL REQUIREMENTS	19-112
20	BALANCE OF PLANT DESIGN	
	20.1 SITE PLAN	20-2
	20.2 BUILDINGS DESIGN	20-8
	20.3 SITE FACILITIES DESIGN	20-36
	20.4 MECHANICAL SYSTEMS DESIGN	20-40
	20.5 BUILDING SERVICES DESIGN	20-58
	20.6 ELECTRICAL SYSTEMS DESIGN	20-73
	20.7 DRAWINGS	20-92
	20.8 OUTLINE SPECIFICATIONS	20-109

Table of Contents (Continued)

Chapter		Page
21	SAFETY AND ENVIRONMENTAL ANALYSIS	
	21.1 INTRODUCTION AND SUMMARY	21-1
	21.2 ISSUES OF CONCERN	21-6
	21.3 METHODOLOGY OF SAFETY ANALYSIS	21-11
	21.4 BARRIERS AGAINST RELEASE OF RADIOACTIVITY	21-11
	21.5 TRITIUM DOSE RATES	21-17
	21.6 ACCIDENT-RELATED DOSE RATES DUE TO STRUCTURAL MATERIALS	21-19
	21.7 CORROSION PRODUCTS IN THE PRIMARY COOLANT LOOP . .	21-23
	21.8 ENGINEERED SAFETY FEATURES	21-24
	21.9 LICENSING CONSIDERATIONS	21-28
	21.10 ENVIRONMENTAL IMPACTS	21-29
22	ECONOMIC ANALYSIS	
	22.1 INTRODUCTION/SUMMARY	22-1
	22.2 ECONOMIC GUIDELINES AND ASSUMPTIONS	22-2
	22.3 KEY DESIGN, PERFORMANCE AND OPERATIONAL FEATURES .	22-13
	22.4 CAPITAL COST ACCOUNTS	22-17
	22.5 CAPITAL COSTS	22-18
	22.6 BUSBAR ENERGY COST ELEMENTS	22-101
23	PLANT CONSTRUCTION	
	23.1 REFERENCE SITE	23-1
	23.2 MODULAR CONSTRUCTION AND CONSIDERATIONS	23-2
	23.3 HANDLING AND SHIPPING CONSIDERATIONS	23-4
	23.4 BALANCE OF PLANT SCHEDULE	23-5
	23.5 REACTOR INSTALLATION AND SCHEDULE	23-16
	23.6 DECOMMISSIONING	23-27

APPENDIX A -- UTILITY INTERFACE

APPENDIX B -- VACUUM SYSTEM CONDUCTANCE MODELING

APPENDIX C -- RESOURCE REQUIREMENTS

APPENDIX D -- STARFIRE SEISMIC ANALYSIS

APPENDIX E -- MATERIALS DATA BASE

Table of Contents (Continued)

APPENDIX F -- TRITIUM DOSE CALCULATIONS

APPENDIX G -- CORROSION PRODUCTS IN THE PRIMARY COOLANT LOOP

APPENDIX H -- ADDITIONAL ELECTROMAGNETIC CONSIDERATIONS

APPENDIX I -- MODELING OF ECRH STARTUP

Table of Contents

		Page
12.1	INTRODUCTION	12-1
12.2	COMPONENT ACTIVATION	12-4
12.3	MATERIAL RECYCLING	12-27
12.4	DECAY AFTERHEAT	12-38
12.5	REACTOR ROOM ATMOSPHERIC ACTIVATION	12-44

List of Tables

Number		Page
12-1	Material Inventories of Major Components in the STARFIRE Reactor	12-2
12-2	Radioactivity Concentration in Reactor Components (MCi/m^3)	12-6
12-3	BHP-Air Concentration in Reactor Components km^3 of Air/m^3 of Material	12-8
12-4	BHP-Water Concentration in Reactor Components km^3 of Water/m^3 of Material	12-9
12-5	Radioactivity Inventory in Reactor Components	12-10
12-6	Biological Hazard Potential of Air for Reactor Components	12-11
12-7	Biological Hazard Potential of Water for Reactor Components	12-12
12-8	Radioactivity Analysis for the Limiter System	12-23
12-9	Radioactivity Analysis for the rf-waveguide System	12-24
12-10	Radioactivity Analysis for the Vacuum Pumping System	12-25
12-11	Material Recyclability Classification Based on Component Radioactivity Concentrations	12-32
12-12	Contact Biological Dose of Reactor Components Dose	12-33
12-13	Material Recyclability Classification Based on Component Surface Biological Doses	12-35
12-14	Time Requirement for Material Recycling of Limiter, rf and Vacuum Systems	12-37
12-15	Decay Afterheating Rate of Reactor Components	12-43

List of Figures

Number		Page
12-1	Time-dependence of component radioactivity concentration during reactor operation	12-5
12-2	Isotopic radioactivity contribution of the PCA first wall	12-13
12-3	Elemental contribution to the PCA first wall radioactivity	12-14
12-4	Isotopic radioactivity contribution of the Zr_5Pb_3 neutron multiplier	12-16
12-5	Isotopic radioactivity contribution of the $LiAlO_2$ breeder	12-17
12-6	Isotopic radioactivity contribution of the Ti6Al4V shield	12-18
12-7	Isotopic radioactivity contribution of the Fe14Mn2Ni2Cr shield	12-19
12-8	Isotopic radioactivity contribution of the Nb3Sn superconductor	12-20
12-9	Isotopic radioactivity contribution of the NbTi superconductor	12-21
12-10	Effect of decay gamma source volume upon the surface contact biological dose.	12-30
12-11	Spatial dependence of contact biological dose in a sphere with a uniform source distribution	12-31
12-12	Time dependence of decay heating in the Zr_5Pb_3 multiplier system	12-40
12-13	Time dependence of decay heating in the beryllium multiplier system	12-41
12-14	A comparison of the system decay heat for the Zr_5Pb_3 and Be neutron multiplier system designs	12-42
12-15	Time dependence of the system decay heat	12-42
12-16	Activation of the candidate inert gases in the reactor building	12-45

12.1 INTRODUCTION

One of the major objectives of the STARFIRE study is to develop a reactor design with favorable safety and environmental features. Neutron-induced activation in the component materials and tritium in the DT fuel are the primary source terms for environmental impact assessments. The most serious concern with regard to the activation is the production of radioisotopes with very long half-lives (> 50 - 100 year) in relatively large volumes of materials as this has two consequences of: (1) permanent storage requirements and (2) depletion of some resource-limited materials. Although the activation level of fusion reactors is expected to be substantially lower than fission reactors because of the absence of fission products and actinides, minimizing the long-lived radioactive products from future fusion reactors remains an important design criterion.

With regard to the material resource problem, it should be emphasized that in a mature fusion power economy, the continued use of materials without the ability to recycle would result in the serious depletion of some reactor construction materials. Based on the study shown in Appendix C and also the study of the UWMAK-III[1] design, one of the key areas associated with the resource limitation is the large material inventory requirement for a broad class of important elements such as niobium, chromium, tungsten, etc. (see Table 12-1). For example, the STARFIRE design requires approximately 100 metric tons (MT) of niobium for the superconducting magnets, resulting in a resource requirement of $\sim 8 \times 10^3$ MT for 10^5 MWe fusion economy (equivalent to $\sim$ 83 STARFIRE reactors). This figure is compared to an identified niobium resource in the United States of $\sim 1.4 \times 10^5$ MT and worldwide resource of $\sim 1.5 \times 10^7$ MT[2] indicating that $\sim$ 5.7% of the total U. S. resource would be required. Another example is the chromium resource of which the identified chromite ore in the U. S. is estimated to be $\sim 5.6 \times 10^6$ MT[3] and the chromium metal resource in the U. S. is only $\sim 4.1 \times 10^5$ MT. Under the same condition of 10^5 MWe fusion economy, approximately 1.1×10^5 metric tons of chromium which is $\sim$ 28% of the U. S. resource will be needed. If the primary shield material of Fe-14Mn-2Ni-2Cr (Fel422) is replaced by more conventional iron-base alloys such as type 304 stainless steel (304 SS) and type 316 stainless steel (316 SS) the chromium requirement will be raised to $\sim 2.8 \times 10^5$ MT

Table 12-1. Material Inventories of Major Components in the STARFIRE Reactor

Material	Volume[a] (m^3)	Mass[a] (MT)
PCA	57	450
Zr_5Pb_3	37	329
$LiAlO_2$	178	605
C	102	163
Fe1422	1697	13475
W	44	840
B_4C	355	887
Ti6Al4V	33	147
TiH_2	422	1646
304SS	564	4441
Nb_3Sn	6.4	51
NbTi	14	90
Cu	245	2188
G-10	227	426
Fiberglass	50	90
Liquid-helium	331	42
Be	0.6	1.2
Ta-5W	1.9	31
Total	4,365	25,902
Concrete	9,370	21,500

a - Relation between the weight and mass may not be consistent because of independent rounding.

which is ∿ 69% of the total U. S. resource. In fact, this is one of the reasons that Fe1422 has been selected as the primary shield structural material, instead of 304 SS, in the STARFIRE design.

An important strategy for fusion reactor development, therefore, is to avoid generating any large inventories of high-level, long-term activation so that a majority of the reactor construction materials could be recycled on a reasonably short time-scale, e.g., within a human generation of ∿ 30 yr after component replacement or reactor decommissioning. Our analysis shows that more than 98% of the total radioactivity inventory in the STARFIRE design is confined to the first wall/blanket region which is less than 10% of the total reactor component volume (excluding reactor building). More than 90% of the total volume of the radioactive material inventory in STARFIRE, and in tokamak reactors in general, is therefore present in reactor components external to the first wall and blanket such as the bulk and penetration shields, toroidal and poloidal magnets and auxiliary plasma heating system. This large volume contains ∿ 2% of the total activation whose specific radioactivity concentration is still high enough to be accounted for in the design consideration. This observation clearly indicates the importance of the shielding design in minimizing the total long-lived radioactive products in the system. The STARFIRE shield design has, in fact, evolved from a comprehensive optimization study prior to the final design selection. As shown in Chapter 11 the shield optimization criteria include the minimization of long-term activation products, in addition to providing for adequate protection for all reactor components.

One of the primary objectives of this section is to identify key radioactive isotopes along with their inventories in each reactor-component. Importance of the major radioisotopes will be examined in terms of radioactivity and radioactivity-related parameters such as biological hazard potentials. The analysis focuses on the following categories: (1) component activation, (2) material recyclability, (3) decay afterheat and (4) reactor room atmospheric activation. The activation analysis has been carried out using a radioactivity calculation code, RACC[4] along with the associated activation data libraries of RACCXLIB and RACCDLIB[5].

12.2 COMPONENT ACTIVATION

The system dimensions and material compositions used in the analysis are presented in Tables 11-1, 11-2, 11-7 and 11-8 of the radiation shielding chapter. For the purpose of the radioactivity calculations, the reactor is assumed to be in operation for five full years at a neutron wall load of 3.6 MW/m^2, i.e., 18 $MW\text{-}yr/m^2$ integral wall load prior to reactor shutdown. Figure 12-1 shows the radioactivity concentration during reactor operation in the first wall, the neutron multiplier and the second wall, as a function of time after startup. Due to the constant production of the ^{55}Fe isotope, the radioactivity concentrations in the PCA steel walls exhibit continual increases with irradiation time. This is in contrast to the multiplier activation that reaches equilibrium shortly after startup. For most of the operational durations of interest (e.g., 4 - 5 yr), however, the variation of the concentration seems quite trivial. It is noted that the radioactivity level in the first wall builds up to $\sim$ 50% its maximum value in only $\sim$ 1 month.

Tables 12-2 through 12-4 summarize specific radioactivity, biological hazard potential of air (BHP-air) and biological hazard potential of water (BHP-water), respectively. Their respective volume-integrated values are given in Tables 12-5 through 12-7. The BHP values are defined as the air/water dillution required for the radioactivity concentrations to decrease to their maximum permissible concentrations (MPCs)* defined in the NRC regulations[6]. These parameters provide some measure of the biological impact upon inhalation and ingestion if the radioactive products were dispersed into the environment. It should be pointed out, however, that radioactive products in fusion systems are generally rather non-vulnerable (i.e., non-mobile) particularly when solid breeding materials are used for the tritium fuel generation as in the present design. The major exceptions in which fusion systems may potentially impact the environment through the more vulnerable radioactive inventories, and hence, where such biological hazard measures as BHPs represent the essential importance, is associated with tritium as fuel and radioactive corrosion products in the water-coolant system. The potential release of such tritium and corrosion products is addressed in Chapter 21.

*MPCs are given for air and water according to whether (a) the isotope is in a soluble or insoluble form, and (b) the exposure in a restricted area (40 hr/week - 13 week/calendar quarter exposure) is for general individuals or for minors under 18 years of age. To assure an unambiguous comparison, all MPCs used herein apply to exposure to minors in restricted areas and the minimum between soluble and insoluble.

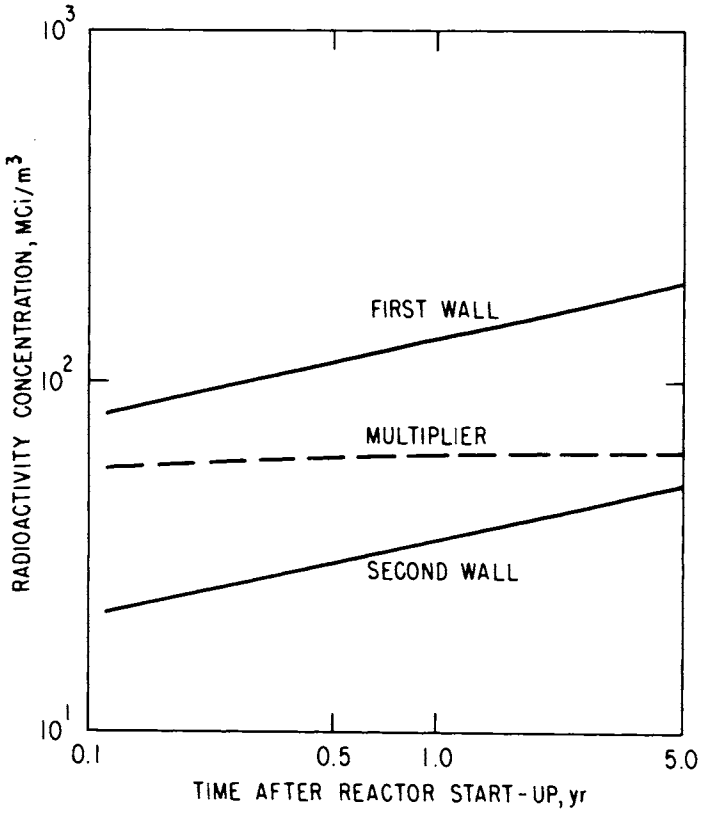

Figure 12-1. Time-dependence of component radioactivity concentration during reactor operation.

Nevertheless, the BHP values are useful for comparing activation levels of different reactor components. As an example, both of the BHP-air and BHP-water for the Zr_5Pb_3 neutron multiplier are ∿ 95% of the total BHPs for the reactor because of a significant production of isotope ^{89}Zr (decay half-life of 78.4 hr, $EC/\beta^+/\gamma$).[7] On the other hand, the relative importance of the Zr_5Pb_3 component in units of Curies is less and its contribution to the total radioactivity is only about 38% (∿ 2.3×10^3 MCi) at reactor shutdown. The implication is that one needs a reliable biological protection against dispersion of the multiplier. However, as shown in Chapter 12, no accident that could potentially melt, vaporize and release the multiplier outside the reactor building could be identified for STARFIRE.

Over the span of 0 to 1000 yr after shutdown the first wall, the neutron multiplier, the breeding blanket and the reflector contain almost 99% of the total radioactivity inventory by all three measures studied. This clearly indicates the importance of these four components from the activation standpoint while at the same time, it shows that most of the high-level long-term activation

Table 12-2. Radioactivity Concentration in Reactor Components (MCi/m^3)

TIME AFTER REACTOR SHUTDOWN

REACTOR COMPONENT			0	1YR	5YR	10YR	20YR	30YR	50YR	100YR	500YR	1000YR
1ST WALL	PCA	--	3.82E 02	1.39E 02	4.43E 01	1.24E 01	1.36E 00	3.73E-01	2.01E-01	4.00E-02	1.72E-02	8.16E-03
	H2O	--	1.15E 01	0.0	0.0	0.0	0.0	0.0	0.0	0.0	0.0	0.0
MULTIFLR	ZR5FB3	--	6.28E 01	3.54E-01	1.57E-03	1.13E-03	8.20E-04	6.35E-04	4.12E-04	7.59E-05	7.51E-05	7.51E-05
2ND WALL	PCA	--	1.45E 02	5.00E 01	1.59E 01	4.46E 00	4.93E-01	1.36E-01	7.43E-02	1.74E-02	8.97E-03	4.94E-03
	H2O	--	4.11E 00	0.0	0.0	0.0	0.0	0.0	0.0	0.0	0.0	0.0
IBLANKET	PCA	--	4.06E 01	1.43E 01	4.46E 00	1.24E 00	1.23E-01	2.31E-02	7.57E-03	3.23E-03	2.45E-03	1.65E-03
	LIALO2	--	1.04E 01	2.37E-06	2.37E-06	2.37E-06	2.37E-06	2.37E-06	2.37E-06	2.37E-06	2.36E-06	2.36E-06
	H2O	--	1.24E 00	0.0	0.0	0.0	0.0	0.0	0.0	0.0	0.0	0.0
OBLANKET	PCA	--	2.56E 01	8.93E 00	2.79E 00	7.76E-01	7.60E-02	1.45E-02	4.77E-03	2.04E-03	1.55E-03	1.04E-03
	LIALO2	--	6.64E 00	1.46E-06	1.46E-06	1.46E-06	1.46E-06	1.46E-06	1.46E-06	1.46E-06	1.46E-06	1.46E-06
	H2O	--	7.79E-01	0.0	0.0	0.0	0.0	0.0	0.0	0.0	0.0	0.0
REFLECTR	PCA	--	3.40E 00	6.21E-01	2.16E-01	7.19E-02	2.21E-02	1.71E-02	1.43E-02	2.20E-03	5.87E-04	9.51E-05
	GRAPHITE	--	2.32E-03	2.32E-03	2.32E-03	2.32E-03	2.31E-03	2.31E-03	2.31E-03	2.24E-03	2.13E-03	2.06E-03
	H2O	--	2.40E-02	0.0	0.0	0.0	0.0	0.0	0.0	0.0	0.0	0.0
IBLK-JKT	PCA	--	7.25E 00	2.16E 00	6.69E-01	1.86E-01	1.91E-02	4.20E-03	1.85E-03	1.01E-03	8.09E-04	5.57E-04
OBLK-JKT	PCA	--	2.09E 00	3.72E-01	1.33E-01	4.55E-02	1.53E-02	1.22E-02	1.03E-02	1.61E-03	3.94E-04	4.67E-05
HEADER	PCA	--	2.20E 00	3.96E-01	1.45E-01	5.03E-02	1.82E-02	1.40E-02	1.25E-02	1.93E-03	4.53E-04	3.85E-05
	H2O	--	6.53E-03	0.0	0.0	0.0	0.0	0.0	0.0	0.0	0.0	0.0
IBLD-JKT	FE1422	--	9.62E 00	1.96E 00	5.28E-01	1.36E-01	9.90E-03	8.56E-04	7.57E-05	1.14E-05	4.22E-06	2.12E-06
OBLD-JKT	FE1422	--	1.76E 00	1.45E-01	4.59E-02	1.24E-02	1.30E-03	4.91E-04	3.71E-04	5.81E-05	1.43E-05	2.47E-06
ISHIELD1	FE1422	--	5.11E-02	1.22E-02	3.30E-03	8.50E-04	6.17E-05	5.23E-06	4.15E-07	6.20E-08	2.33E-08	1.25E-08
	TUNGSTEN	--	2.89E-01	9.74E-03	3.76E-06	2.65E-07	1.09E-07	8.81E-08	8.27E-08	6.85E-08	5.95E-08	4.21E-08
	H2O	--	8.70E-04	0.0	0.0	0.0	0.0	0.0	0.0	0.0	0.0	0.0
ISHIELD2	FE1422	--	5.46E-03	1.46E-03	3.90E-04	1.00E-04	7.29E-06	6.21E-07	4.45E-08	6.46E-09	2.50E-09	1.33E-09
	B4C	--	2.24E-04	2.01E-10	2.01E-10	2.01E-10	2.01E-10	2.01E-10	2.01E-10	2.01E-10	2.01E-10	2.01E-10
	H2O	--	1.07E-04	0.0	0.0	0.0	0.0	0.0	0.0	0.0	0.0	0.0
OSHIELD1	TI6AL4V	--	4.54E-03	1.15E-04	4.66E-07	9.42E-08	2.63E-08	1.83E-08	1.50E-08	4.24E-09	2.62E-09	1.89E-09
	TIH2	--	3.15E-03	1.04E-04	1.44E-07	6.82E-11	1.53E-17	3.44E-24	1.74E-37	0.0	0.0	0.0
	B4C	--	1.01E-03	1.02E-09	1.02E-09	1.02E-09	1.02E-09	1.02E-09	1.02E-09	1.02E-09	1.02E-09	1.02E-09
	H2O	--	4.58E-04	0.0	0.0	0.0	0.0	0.0	0.0	0.0	0.0	0.0
OSHIELD2	FE1422	--	2.02E-05	6.10E-06	1.51E-06	3.86E-07	2.83E-08	2.59E-09	2.85E-10	4.23E-11	1.43E-11	6.29E-12
	B4C	--	1.37E-06	1.53E-12	1.53E-12	1.53E-12	1.53E-12	1.53E-12	1.53E-12	1.53E-12	1.53E-12	1.53E-12
	H2O	--	5.92E-07	0.0	0.0	0.0	0.0	0.0	0.0	0.0	0.0	0.0
OSHIELD3	FE1422	--	3.99E-07	2.19E-08	5.53E-09	1.42E-09	1.00E-10	1.41E-11	5.14E-12	8.56E-13	2.78E-13	1.12E-13
ISLD-JK2	FE1422	--	2.62E-04	6.12E-05	1.59E-05	4.09E-06	2.98E-07	2.65E-08	2.76E-09	4.22E-10	1.51E-10	7.23E-11
AIR	CO2	--	1.36E-13	1.95E-20	1.95E-20	1.95E-20	1.95E-20	1.91E-20	1.94E-20	1.82E-20	1.84E-20	1.73E-20
IMAG-DHR	FE1422	--	2.47E-04	4.02E-05	1.03E-05	2.70E-06	1.90E-07	1.89E-08	3.09E-09	4.80E-10	1.61E-10	6.03E-11
OMAG-DHR	FE1422	--	1.61E-07	1.32E-09	3.91E-10	1.04E-10	1.06E-11	3.79E-12	2.81E-12	4.53E-13	1.25E-13	3.23E-14
IMAG-HET	304SS	--	6.21E-05	1.33E-05	4.30E-06	1.19E-06	1.29E-07	4.13E-08	2.71E-08	7.41E-09	4.30E-09	2.57E-09
OMAG-HET	304SS	--	1.94E-08	9.57E-10	3.36E-10	1.00E-10	3.02E-11	2.28E-11	1.95E-11	4.05E-12	2.57E-12	1.45E-12
IMAGNET1	COPPER	--	1.52E-04	1.83E-07	1.45E-07	1.13E-07	8.50E-08	7.35E-08	6.15E-08	9.31E-09	2.03E-09	4.74E-11
	304SS	--	1.15E-05	1.74E-06	5.72E-07	1.70E-07	3.27E-08	2.03E-08	1.70E-08	3.23E-09	1.24E-09	5.20E-10
	NB3SN	--	5.35E-05	2.21E-06	1.07E-06	5.63E-07	2.64E-07	1.56E-07	6.09E-08	7.80E-09	7.75E-09	7.61E-09
	G-10	--	2.78E-03	2.89E-14	2.89E-14	2.89E-14	2.88E-14	2.88E-14	2.87E-14	2.79E-14	2.72E-14	2.56E-14
IMAGNET2	304SS	--	1.05E-07	1.12E-03	4.01E-09	1.30E-09	3.74E-10	2.83E-10	2.44E-10	4.13E-11	1.31E-11	4.04E-12
	COPPER	--	1.66E-06	2.71E-10	2.03E-10	1.62E-10	1.21E-10	1.05E-10	8.75E-11	1.32E-11	2.93E-12	6.74E-14
	NBTI	--	2.94E-07	2.57E-09	2.10E-09	1.64E-09	1.01E-09	6.20E-10	2.62E-10	5.52E-11	5.43E-11	5.39E-11
	G-10	--	4.07E-11	4.27E-16	4.26E-16	4.26E-16	4.26E-16	4.25E-16	4.24E-16	4.11E-16	4.03E-16	3.70E-16
IMAG-HE2	304SS	--	4.98E-10	3.60E-11	1.32E-11	4.35E-12	1.32E-12	1.04E-12	8.81E-13	1.58E-13	5.43E-14	1.96E-14
OMAGNET1	304SS	--	4.61E-09	3.95E-10	1.64E-10	4.73E-11	1.43E-11	1.12E-11	9.53E-12	1.71E-12	5.84E-13	2.10E-13
	COPPER	--	8.09E-08	4.03E-12	3.79E-12	3.00E-12	2.28E-12	1.90E-12	1.66E-12	2.52E-13	5.57E-14	1.23E-15
	NB3SN	--	2.51E-08	1.03E-09	4.39E-10	1.92E-10	7.29E-11	4.19E-11	1.73E-11	3.72E-12	3.69E-12	3.63E-12
	G-10	--	6.03E-13	1.63E-17	1.60E-17	1.60E-17	1.60E-17	1.67E-17	1.67E-17	1.62E-17	1.52E-17	1.49E-17
OMAGNET2	COPPER	--	6.85E-10	1.34E-14	1.04E-14	8.11E-15	6.10E-15	5.23E-15	4.42E-15	6.69E-16	1.40E-16	3.41E-18
	304SS	--	4.33E-11	4.40E-12	1.64E-12	5.43E-13	1.67E-13	1.31E-13	1.11E-13	1.83E-14	5.41E-15	1.40E-15
	NBTI	--	1.13E-10	6.31E-13	5.19E-13	4.07E-13	2.53E-13	1.61E-13	7.17E-14	2.13E-14	2.12E-14	2.03E-14
	G-10	--	1.81E-15	1.95E-19	1.95E-19	1.95E-19	1.95E-19	1.95E-19	1.94E-19	1.83E-19	1.84E-19	1.73E-19
SUPT-CYL	G-10	--	2.00E-19	2.00E-19	2.00E-19	2.00E-19	1.99E-19	1.99E-19	1.99E-19	1.93E-19	1.80E-19	1.77E-19
OH/EF	COPPER	--	1.23E-12	1.05E-17	7.86E-18	5.95E-18	4.29E-18	3.65E-18	3.03E-18	4.50E-19	1.01E-19	2.33E-21
	304SS	--	9.39E-14	4.30E-15	1.57E-15	5.20E-16	1.61E-16	1.26E-16	1.00E-16	1.90E-17	6.37E-18	2.20E-18
	NBTI	--	1.87E-13	9.13E-16	7.51E-16	5.90E-16	3.69E-16	2.30E-16	1.00E-16	3.54E-17	3.52E-17	3.46E-17
	G-10	--	1.63E-18	2.10E-22	2.18E-22	2.17E-22	2.17E-22	2.17E-22	2.16E-22	2.10E-22	2.03E-22	1.93E-22
BLDGWALL	CONCRETE	--	1.49E-09	3.29E-10	1.13E-10	2.90E-11	2.07E-12	1.44E-13	6.97E-16	2.25E-18	2.24E-18	2.21E-18

1ST WALL	: FIRST WALL	MULTIPLR	: NEUTRON MULTIPLIER
2ND WALL	: SECOND WALL	IBLANKET	: INBOARD BLANKET
OBLANKET	: OUTBOARD BLANKET	REFLECTR	: REFLECTOR
IBLK-JKT	: INBOARD BLANKET JACKET	OBLT-JKT	: OUTBOARD BLANKET JACKET
HEADER	: COOLANT MANIFOLD HEADER	ISLD-JK1	: INBOARD SHIELD JACKET 1
OSLD-JKT	: OUTBOARD SHIELD JACKET	ISHIELD1	: INBOARD SHIELD 1
ISHIELD2	: INBOARD SHIELD 2	OSHIELD1	: OUTBOARD SHIELD 1
OSHIELD2	: OUTBOARD SHIELD 2	OSHIELD3	: OUTBOARD SHIELD 3
ISLD-JK2	: INBOARD SHIELD JACKET 2	AIR	: REACTOR ROOM ATMOSPHERE
INAG-DWR	: INBOARD MAGNET DEWAR	OMAG-DWR	: OUTBOARD MAGNET DEWAR
INAG-HET	: INBOARD MAGNET HELIUM VESSEL	OMAG-HET	: OUTBOARD MAGNET HELIUM VESSEL
INACNET1	: INBOARD HIGH FIELD MAGNET	INACNET2	: INBOARD LOW FIELD MAGNET
INAG-HE2	: INBOARD MAGNET HE-VESSEL 2	OMAGNET1	: OUTBOARD HIGH FIELD MAGNET
OMAGNET2	: OUTBOARD LOW FIELD MAGNET	SUPT-CYL	: SUPPORT CYLINDER
OH/EF	: SUPER-CONDUCTING OH/EF COILS	BLDGWALL	: REACTOR BUILDING

is confined to a small reactor volume or weight. The average annual radwaste removed from the STARFIRE reactor is estimated to be $\sim$ 250 MT ($\sim$ 62 m^3 in volume) based on a blanket sector replacement interval of 6 yr. Note that $\sim$ 40% of the radwaste weight ($\sim$ 48% in volume) comes from the $LiAlO_2$ breeder which has a fairly low radioactivity concentration of only about 1 Ci/m^3. This concentration is almost constant over a period of 1 $\sim$ 1000 yr after shutdown. About 11% of the waste ($\sim$ 28% in volume) comes from the graphite reflector which also has a very low concentration of $\sim$ 20 mCi/m^3. The activity of the Zr_5Pb_3 decays in several years to an order of 1 kCi/m^3 which can be considered as a medium level waste. As a result, the most important radwaste depository requirement for <u>high-level</u> <u>long-term</u> activation in STARFIRE is dictated by the PCA structural material waste whose average annual discharge rate is only about 75 MT ($\sim$ 9.5 m^3 in volume). A simple superposition of the accumulated radwastes (without taking into account the radioactivity decay), therefore, results in $\sim$ 2250 MT ($\sim$ 286 m^3 in volume) at the end of plant life. Based on Ref. (8), a typical annual high-level radwaste from a 1200 MWe LMFBR system is estimated to be $\sim$ 12 m^3. The waste primarily consists of a liquid waste that has been concentrated and solidified by vitrification and a solid waste of cladding hulls. It is assumed in the estimate that the uranium and plutonium fuels of $\sim$ 29 MT have been reprocessed for reuse and the fission products/activities of $\sim$ 1 MT have been also separated out of the total waste of $\sim$ 30 MT annually discharged. It should also be pointed out that the degree of biological hazard potential associated with fusion systems is substantially low compared to that in fission systems. For example, the BHP-air of the STARFIRE design varies as air volumes of 57 km^3, 0.03 km^3 and 0.0004 km^3 per kWth reactor power at post-shutdown times of 1 yr, 100 yr and 1000 yr, respectively, compared to the

Table 12-3. BHP-Air Concentration in Reactor Components
(km^3 of Air/m^3 of Material)

TIME AFTER REACTOR SHUTDOWN

REACTOR COMPONENT		0	1YR	5YR	10YR	20YR	30YR	50YR	100YR	500YR	1000YR
1ST WALL	FCA --	1.03E 08	3.43E 07	1.09E 07	5.12E 06	1.37E 06	4.36E 05	1.14E 05	1.51E 04	4.35E 03	1.05E 03
	H2O --	3.82E 05	0.0	0.0	0.0	0.0	0.0	0.0	0.0	0.0	0.0
MULTIPLR	ZR5PB3 --	4.33E 08	2.20E 05	1.79E 04	1.55E 04	1.20E 04	9.37E 03	5.73E 03	7.64E 01	6.49E 01	6.49E 01
2ND WALL	FCA --	3.84E 07	1.26E 07	3.99E 06	1.87E 06	5.02E 05	1.59E 05	4.09E 04	5.60E 03	1.87E 03	6.12E 02
	H2O --	1.37E 05	0.0	0.0	0.0	0.0	0.0	0.0	0.0	0.0	0.0
IBLANKET	FCA --	1.17E 07	3.70E 06	1.16E 06	5.33E 05	1.33E 05	3.81E 04	4.72E 03	5.99E 02	3.40E 02	2.00E 02
	LIALO2 --	9.79E 05	2.37E 01	2.37E 01	2.37E 01	2.37E 01	2.37E 01	2.37E 01	2.37E 01	2.36E 01	2.36E 01
	H2O --	4.13E 04	0.0	0.0	0.0	0.0	0.0	0.0	0.0	0.0	0.0
OBLANKET	FCA --	7.37E 06	2.33E 06	7.26E 05	3.33E 05	8.66E 04	2.39E 04	2.97E 03	3.78E 02	2.15E 02	1.26E 02
	LIALO2 --	6.21E 05	1.46E 01	1.46E 01	1.46E 01	1.46E 01	1.46E 01	1.46E 01	1.46E 01	1.46E 01	1.46E 01
	H2O --	2.59E 04	0.0	0.0	0.0	0.0	0.0	0.0	0.0	0.0	0.0
REFLECTR	FCA --	3.61E 05	9.83E 04	3.52E 04	2.05E 04	1.15E 04	8.92E 03	7.15E 03	1.09E 03	2.50E 02	1.41E 01
	GRAPHITE--	2.32E-04	2.32E-04	2.32E-04	2.32E-04	2.31E-04	2.31E-04	2.31E-04	2.24E-04	2.13E-04	2.06E-04
	H2O --	7.99E 02	0.0	0.0	0.0	0.0	0.0	0.0	0.0	0.0	0.0
IBLK-JKT	FCA --	1.92E 06	5.95E 05	1.76E 05	8.15E 04	2.10E 04	5.89E 03	8.43E 02	1.59E 02	1.05E 02	6.64E 01
OBLK-JKT	FCA --	1.76E 05	4.71E 04	1.83E 04	1.17E 04	7.51E 03	6.24E 03	5.16E 03	7.84E 02	1.77E 02	7.50E 00
HEADER	FCA --	1.47E 05	3.99E 04	1.81E 04	1.20E 04	8.50E 03	7.45E 03	6.27E 03	9.51E 02	2.13E 02	7.05E 00
	H2O --	2.18E 02	0.0	0.0	0.0	0.0	0.0	0.0	0.0	0.0	0.0
ISLD-JK1	FE1422 --	1.57E 06	5.44E 05	4.55E 04	1.12E 04	2.06E 03	5.14E 02	6.36E 01	5.39E 00	1.81E 00	8.20E-01
OSLD-JKT	FE1422 --	1.19E 05	1.83E 04	2.56E 03	8.26E 02	3.05E 02	2.28E 02	1.85E 02	2.83E 01	6.23E 00	2.00E-01
ISHIELD1	FE1422 --	9.33E 03	3.42E 03	2.85E 02	6.96E 01	1.28E 01	3.17E 00	3.68E-01	2.94E-02	1.04E-02	5.13E-03
	TUNGSTEN--	5.16E 04	1.48E 03	5.92E-01	2.55E-01	7.48E-02	2.75E-02	1.17E-02	8.27E-03	7.12E-03	5.06E-03
	H2O --	2.90E 01	0.0	0.0	0.0	0.0	0.0	0.0	0.0	0.0	0.0
ISHIELD2	FE1422 --	1.11E 03	4.19E 02	3.45E 01	8.39E 00	1.55E 00	3.83E-01	4.20E-02	3.13E-03	1.16E-03	6.14E-04
	B4C --	7.46E 00	2.01E-03	2.01E-03	2.01E-03	2.01E-03	2.01E-03	2.01E-03	2.01E-03	2.01E-03	2.01E-03
	H2O --	3.55E 00	0.0	0.0	0.0	0.0	0.0	0.0	0.0	0.0	0.0
OSHIELD1	TI6AL4V --	1.75E 03	1.24E 02	2.83E-01	6.52E-02	2.34E-02	1.23E-02	7.73E-03	2.19E-03	1.45E-03	1.21E-03
	TIH2 --	1.53E 03	1.13E 02	1.44E-01	6.82E-05	1.53E-11	3.44E-13	1.74E-31	0.0	0.0	0.0
	B4C --	3.32E 01	1.02E-02	1.02E-02	1.02E-02	1.02E-02	1.02E-02	1.02E-02	1.02E-02	1.02E-02	1.02E-02
	H2O --	1.53E 01	0.0	0.0	0.0	0.0	0.0	0.0	0.0	0.0	0.0
OSHIELD2	FE1422 --	5.85E 00	2.12E 00	1.57E-01	3.65E-02	7.10E-03	1.82E-03	2.36E-04	2.09E-05	7.04E-06	3.13E-06
	B4C --	4.53E-02	1.53E-05	1.53E-05	1.53E-05	1.53E-05	1.53E-05	1.53E-05	1.53E-05	1.53E-05	1.53E-05
	H2O --	1.97E-02	0.0	0.0	0.0	0.0	0.0	0.0	0.0	0.0	0.0
OSHIELD3	FE1422 --	3.50E-02	7.25E-03	5.46E-04	1.20E-04	2.63E-05	8.40E-06	2.83E-06	3.81E-07	9.34E-08	1.35E-08
ISLD-JK2	FE1422 --	5.15E 01	1.83E 01	1.43E 00	3.52E-01	6.63E-02	1.63E-02	2.22E-03	2.01E-04	6.63E-05	2.89E-05
AIR	CO2 --	4.53E-09	1.95E-16	1.95E-16	1.95E-16	1.95E-16	1.94E-16	1.94E-16	1.88E-16	1.84E-16	1.73E-16
IMAG-DNR	FE1422 --	3.73E 01	1.23E 01	9.63E-01	2.30E-01	4.38E-02	1.16E-02	2.03E-03	2.28E-04	6.50E-05	1.93E-05
OMAG-DNR	FE1422 --	8.53E-03	2.64E-04	2.68E-05	7.83E-06	2.64E-06	1.81E-06	1.40E-06	2.11E-07	4.73E-08	1.84E-09
IMAG-HET	304SS --	1.06E 01	3.03E 00	7.64E-01	3.41E-01	9.37E-02	3.39E-02	1.29E-02	2.13E-03	7.00E-04	3.03E-04
OMAG-HET	304SS --	1.12E-03	1.28E-04	5.04E-05	2.82E-05	1.47E-05	1.11E-05	8.79E-06	1.54E-06	5.11E-07	1.69E-07
IMAGNET1	COPPER --	4.03E 00	3.76E-01	2.38E-01	1.42E-01	6.53E-02	4.28E-02	3.12E-02	4.65E-03	1.03E-03	2.37E-05
	304SS --	1.15E 00	2.87E-01	8.24E-02	4.10E-02	1.72E-02	1.12E-02	8.25E-03	1.31E-03	3.47E-04	6.13E-05
	NB3SN --	1.89E-01	1.65E-01	1.35E-01	1.06E-01	6.50E-02	4.06E-02	1.72E-02	3.90E-03	3.87E-03	3.81E-03
	G-10 --	9.28E-04	2.88E-10	2.88E-10	2.88E-10	2.88E-10	2.88E-10	2.87E-10	2.79E-10	2.72E-10	2.56E-10
IMAGNET2	304SS --	5.69E-03	8.94E-04	3.92E-04	2.43E-04	1.65E-04	1.42E-04	1.19E-04	1.86E-05	4.52E-06	4.73E-07
	COPPER --	3.93E-02	5.45E-04	3.45E-04	2.05E-04	9.37E-05	6.12E-05	4.44E-05	6.62E-06	1.46E-06	3.37E-08
	NBTI --	7.07E-04	6.55E-04	5.40E-04	4.25E-04	2.66E-04	1.71E-04	7.95E-05	2.76E-05	2.74E-05	2.69E-05
	G-10 --	1.36E-06	4.27E-12	4.26E-12	4.26E-12	4.26E-12	4.25E-12	4.24E-12	4.11E-12	4.02E-12	3.78E-12
IMAG-HE2	304SS --	2.47E-05	2.43E-06	1.25E-06	8.09E-07	5.76E-07	5.05E-07	4.23E-07	6.75E-08	1.70E-08	2.32E-09
OMAGNET1	304SS --	2.27E-04	2.75E-05	1.37E-05	8.83E-06	6.25E-06	5.48E-06	4.63E-06	7.30E-07	1.84E-07	2.47E-08
	COPPER --	1.93E-03	9.46E-06	6.03E-06	3.63E-06	1.71E-06	1.14E-06	8.42E-07	1.26E-07	2.78E-08	6.41E-10
	NB3SN --	4.58E-05	4.32E-05	3.55E-05	2.80E-05	1.75E-05	1.13E-05	5.27E-06	1.85E-06	1.85E-06	1.81E-06
	G-10 --	2.03E-08	1.69E-13	1.69E-13	1.69E-13	1.69E-13	1.67E-13	1.67E-13	1.62E-13	1.58E-13	1.49E-13
OMAGNET2	COPPER --	1.59E-05	2.67E-08	1.69E-08	1.01E-08	4.67E-09	3.07E-09	2.24E-09	3.35E-10	7.40E-11	1.70E-12
	304SS --	2.01E-06	2.56E-07	1.40E-07	9.33E-08	7.13E-08	6.42E-08	5.49E-08	8.48E-09	2.00E-09	1.67E-10
	NBTI --	1.73E-07	1.63E-07	1.35E-07	1.07E-07	6.87E-08	4.55E-08	2.33E-08	1.07E-08	1.06E-08	1.04E-08
	G-10 --	6.02E-11	1.95E-15	1.95E-15	1.95E-15	1.95E-15	1.95E-15	1.94E-15	1.88E-15	1.84E-15	1.73E-15
SUPT-CYL	G-10 --	2.00E-15	2.00E-15	2.00E-15	2.00E-15	1.99E-15	1.99E-15	1.99E-15	1.93E-15	1.88E-15	1.77E-15
OH/EF	COPPER --	4.60E-08	2.27E-11	1.42E-11	8.27E-12	3.55E-12	2.20E-12	1.54E-12	2.29E-13	5.07E-14	1.17E-15
	304SS --	4.44E-09	2.55E-10	1.40E-10	9.27E-11	6.89E-11	6.15E-11	5.24E-11	8.24E-12	2.06E-12	2.69E-13
	NBTI --	2.50E-10	2.37E-10	1.97E-10	1.57E-10	1.01E-10	6.79E-11	3.59E-11	1.77E-11	1.76E-11	1.73E-11
	G-10 --	5.43E-14	2.18E-18	2.13E-18	2.17E-18	2.17E-18	2.17E-18	2.16E-18	2.10E-18	2.05E-18	1.93E-18
BLDGWALL	CONCRETE--	7.77E-05	1.12E-05	3.78E-06	9.94E-07	6.91E-03	4.80E-09	2.49E-11	1.71E-12	1.71E-12	1.71E-12

Table 12-4. BHP-Water Concentration in Reactor Components (km^3 of Water/m^3 of Material)

TIME AFTER REACTOR SHUTDOWN

REACTOR COMPONENT		0	1YR	5YR	10YR	20YR	30YR	50YR	100YR	500YR	1000YR
1ST WALL	PCA --	2.96E 03	5.20E 02	1.60E 02	7.08E 01	2.35E 01	1.30E 01	8.89E 00	3.17E 00	2.18E 00	1.40E 00
	H2O --	0.0	0.0	0.0	0.0	0.0	0.0	0.0	0.0	0.0	0.0
MULTIPLR	ZR5PB3 --	1.48E 04	6.93E 00	1.74E 00	1.54E 00	1.20E 00	9.36E-01	5.71E-01	2.83E-03	1.67E-03	1.66E-03
2ND WALL	PCA --	1.12E 03	1.88E 02	5.85E 01	2.64E 01	9.17E 00	5.34E 00	3.84E 00	1.72E 00	1.29E 00	8.67E-01
	H2O --	0.0	0.0	0.0	0.0	0.0	0.0	0.0	0.0	0.0	0.0
IBLANKET	PCA --	3.27E 02	5.50E 01	1.64E 01	7.11E 00	2.16E 00	1.08E 00	7.17E-01	4.97E-01	4.21E-01	2.95E-01
	LIALO2 --	1.26E 02	7.83E-04	7.83E-04	7.88E-04	7.88E-04	7.83E-04	7.88E-04	7.83E-04	7.83E-04	7.83E-04
	H2O --	0.0	0.0	0.0	0.0	0.0	0.0	0.0	0.0	0.0	0.0
OBLANKET	PCA --	2.06E 02	3.45E 01	1.03E 01	4.46E 00	1.36E 00	6.81E-01	4.53E-01	3.15E-01	2.66E-01	1.87E-01
	LIALO2 --	8.00E 01	4.83E-04	4.83E-04	4.88E-04	4.88E-04	4.88E-04	4.83E-04	4.83E-04	4.83E-04	4.83E-04
	H2O --	0.0	0.0	0.0	0.0	0.0	0.0	0.0	0.0	0.0	0.0
REFLECTR	PCA --	2.20E 01	2.18E 00	1.12E 00	8.17E-01	6.45E-01	5.79E-01	4.96E-01	9.03E-02	3.25E-02	1.22E-02
	GRAPHITE--	2.90E-03	2.90E-03	2.90E-03	2.90E-03	2.89E-03	2.89E-03	2.88E-03	2.83E-03	2.73E-03	2.57E-03
	H2O --	0.0	0.0	0.0	0.0	0.0	0.0	0.0	0.0	0.0	0.0
IBLK-JKT	PCA --	6.05E 01	3.62E 00	2.59E 00	1.19E 00	4.41E-01	2.77E-01	2.20E-01	1.66E-01	1.42E-01	1.00E-01
OBLK-JKT	PCA --	1.26E 01	1.25E 00	7.13E-01	5.47E-01	4.50E-01	4.09E-01	3.51E-01	5.92E-02	1.79E-02	4.82E-03
HEADER	PCA --	1.18E 01	1.23E 00	7.99E-01	6.34E-01	5.36E-01	4.91E-01	4.21E-01	6.67E-02	1.71E-02	2.56E-03
	H2O --	0.0	0.0	0.0	0.0	0.0	0.0	0.0	0.0	0.0	0.0
ISLD-JK1	FE1422 --	7.72E 01	6.88E 00	9.29E-01	2.37E-01	3.13E-02	7.75E-03	2.38E-03	3.35E-04	9.65E-05	3.02E-05
OSLD-JKT	FE1422 --	1.59E 01	3.25E-01	8.14E-02	3.32E-02	1.69E-02	1.45E-02	1.23E-02	1.86E-03	4.16E-04	1.43E-05
ISHIELD1	FE1422 --	3.95E-01	4.32E-02	5.80E-03	1.48E-03	1.93E-04	4.61E-05	1.29E-05	1.81E-06	5.39E-07	1.87E-07
	TUNGSTEN--	3.43E 00	6.90E-02	3.09E-05	1.77E-05	1.56E-05	1.51E-05	1.47E-05	1.23E-05	1.07E-05	7.59E-06
	H2O --	0.0	0.0	0.0	0.0	0.0	0.0	0.0	0.0	0.0	0.0
ISHIELD2	FE1422 --	4.08E-02	5.25E-03	6.93E-04	1.76E-04	2.30E-05	5.38E-06	1.38E-06	1.90E-07	5.86E-08	2.22E-08
	B4C --	6.71E-08	6.71E-08	6.71E-08	6.71E-08	6.71E-08	6.71E-08	6.71E-08	6.71E-08	6.71E-08	6.71E-08
	H2O --	0.0	0.0	0.0	0.0	0.0	0.0	0.0	0.0	0.0	0.0
OSHIELD1	TIGAL4V --	1.32E-01	9.34E-03	2.90E-05	1.62E-06	9.18E-07	7.70E-07	6.64E-07	2.78E-07	2.07E-07	1.48E-07
	TIH2 --	1.11E-01	8.24E-03	1.60E-05	7.57E-09	1.70E-15	3.82E-22	1.93E-35	0.0	0.0	0.0
	B4C --	3.39E-07	3.39E-07	3.39E-07	3.39E-07	3.39E-07	3.39E-07	3.39E-07	3.39E-07	3.39E-07	3.39E-07
	H2O --	0.0	0.0	0.0	0.0	0.0	0.0	0.0	0.0	0.0	0.0
OSHIELD2	FE1422 --	2.25E-04	2.54E-05	2.91E-06	7.20E-07	1.03E-07	2.77E-08	9.10E-09	1.30E-09	3.72E-10	1.15E-10
	B4C --	5.11E-10	5.11E-10	5.11E-10	5.11E-10	5.11E-10	5.11E-10	5.11E-10	5.11E-10	5.11E-10	5.11E-10
	H2O --	0.0	0.0	0.0	0.0	0.0	0.0	0.0	0.0	0.0	0.0
OSHIELD3	FE1422 --	3.78E-06	8.77E-08	1.05E-08	2.74E-09	5.25E-10	2.51E-10	1.67E-10	2.51E-11	5.95E-12	6.25E-13
ISLD-JK2	FE1422 --	2.04E-03	2.32E-04	2.90E-05	7.29E-06	1.00E-06	2.61E-07	8.75E-08	1.25E-08	3.56E-09	1.06E-09
AIR	CO2 --	2.44E-20	2.44E-20	2.44E-20	2.44E-20	2.43E-20	2.43E-20	2.42E-20	2.35E-20	2.30E-20	2.16E-20
IMAG-DWR	FE1422 --	2.09E-03	1.51E-04	1.91E-05	4.84E-06	7.05E-07	2.19E-07	9.95E-08	1.46E-08	3.73E-09	7.61E-10
OMAG-DWR	FE1422 --	1.59E-06	3.79E-09	7.27E-10	2.76E-10	1.31E-10	1.10E-10	9.26E-11	1.41E-11	3.16E-12	1.32E-13
IMAG-HET	304SS --	4.62E-04	5.17E-05	1.35E-05	6.10E-06	2.64E-06	1.92E-06	1.59E-06	8.23E-07	6.45E-07	4.39E-07
OMAG-HET	304SS --	1.63E-07	3.42E-09	1.95E-09	1.49E-09	1.23E-09	1.15E-09	1.04E-09	4.87E-10	3.68E-10	2.45E-10
IMAGNET1	COPPER --	7.28E-04	6.27E-06	4.82E-06	3.77E-06	2.83E-06	2.45E-06	2.05E-06	3.10E-07	6.86E-08	1.58E-09
	304SS --	8.21E-05	5.79E-06	2.14E-06	1.31E-06	9.11E-07	8.00E-07	6.93E-07	2.13E-07	1.33E-07	8.18E-08
	NB3SN --	3.02E-03	5.23E-04	1.82E-04	5.31E-05	7.06E-06	3.29E-06	2.76E-06	2.60E-06	2.58E-06	2.54E-06
	G-10 --	3.61E-14	3.61E-14	3.61E-14	3.61E-14	3.60E-14	3.60E-14	3.59E-14	3.48E-14	3.40E-14	3.20E-14
IMAGNET2	304SS --	7.45E-07	3.05E-08	1.79E-08	1.35E-08	1.12E-08	1.03E-08	9.00E-09	2.12E-09	1.07E-09	5.74E-10
	COPPER --	7.75E-06	9.03E-09	6.92E-09	5.40E-09	4.04E-09	3.49E-09	2.92E-09	4.41E-10	9.76E-11	2.25E-12
	NBTI --	6.13E-07	2.49E-08	2.37E-08	2.25E-08	2.10E-08	2.00E-08	1.91E-08	1.84E-08	1.83E-08	1.80E-08
	G-10 --	5.33E-16	5.33E-16	5.33E-16	5.33E-16	5.32E-16	5.31E-16	5.30E-16	5.14E-16	5.02E-16	4.73E-16
IMAG-HE2	304SS --	3.97E-09	9.77E-11	6.30E-11	4.93E-11	4.19E-11	3.88E-11	3.40E-11	9.11E-12	5.15E-12	2.99E-12
OMAGNET1	304SS --	3.39E-08	1.07E-09	6.84E-10	5.33E-10	4.52E-10	4.18E-10	3.67E-10	9.76E-11	5.49E-11	3.13E-11
	COPPER --	3.84E-07	1.63E-10	1.26E-10	9.99E-11	7.60E-11	6.61E-11	5.54E-11	8.39E-12	1.86E-12	4.27E-14
	NB3SN --	1.30E-06	2.90E-07	1.02E-07	2.94E-08	3.56E-09	1.51E-09	1.28E-09	1.24E-09	1.23E-09	1.21E-09
	G-10 --	2.10E-17	2.10E-17	2.10E-17	2.10E-17	2.09E-17	2.09E-17	2.09E-17	2.02E-17	1.98E-17	1.86E-17
OMAGNET2	COPPER --	3.17E-09	4.48E-13	3.45E-13	2.70E-13	2.03E-13	1.76E-13	1.47E-13	2.23E-14	4.94E-15	1.14E-16
	304SS --	3.03E-10	1.14E-11	7.46E-12	5.83E-12	4.97E-12	4.59E-12	3.99E-12	8.45E-13	3.73E-13	1.84E-13
	NBTI --	3.55E-11	8.71E-12	8.43E-12	8.15E-12	7.76E-12	7.53E-12	7.30E-12	7.11E-12	7.06E-12	6.94E-12
	G-10 --	2.44E-19	2.44E-19	2.44E-19	2.44E-19	2.44E-19	2.43E-19	2.43E-19	2.39E-19	2.30E-19	2.16E-19
SUPT-CYL	G-10 --	2.50E-19	2.50E-19	2.50E-19	2.50E-19	2.49E-19	2.49E-19	2.48E-19	2.41E-19	2.35E-19	2.21E-19
OH/EF	COPPER --	9.19E-12	3.50E-16	2.62E-16	1.99E-16	1.43E-16	1.22E-16	1.01E-16	1.53E-17	3.39E-18	7.78E-20
	304SS --	7.77E-13	1.13E-14	7.48E-15	5.89E-15	5.04E-15	4.67E-15	4.09E-15	1.05E-15	5.77E-16	3.20E-16
	NBTI --	3.84E-14	1.41E-14	1.37E-14	1.33E-14	1.28E-14	1.24E-14	1.21E-14	1.18E-14	1.17E-14	1.15E-14
	G-10 --	2.72E-22	2.72E-22	2.72E-22	2.72E-22	2.71E-22	2.71E-22	2.70E-22	2.62E-22	2.56E-22	2.41E-22
BLDGWALL	CONCRETE--	2.93E-09	4.17E-10	1.41E-10	3.73E-11	2.59E-12	1.80E-13	9.26E-16	5.74E-17	5.74E-17	5.73E-17

Table 12-5. Radioactivity Inventory in Reactor Components (MCi)

REACTOR COMPONENT		VOLUME(M3)	WEIGHT(MT)	TIME AFTER REACTOR SHUTDOWN 0	1YR	10YR	30YR	50YR	100YR	500YR	1000YR
1ST WALL	FCA --	3.64E 00	2.86E 01	1.39E 03	5.07E 02	4.52E 01	1.36E 00	7.31E-01	1.45E-01	6.27E-02	2.97E-02
	H2O --	1.97E 00	1.97E 00	2.26E 01	0.0	0.0	0.0	0.0	0.0	0.0	0.0
MULTIPLR	ZR5FB3 --	3.60E 01	3.23E 02	2.31E 03	1.30E 01	4.35E-02	2.33E-02	1.52E-02	2.79E-03	2.76E-03	2.76E-03
2ND WALL	FCA --	2.60E 00	2.05E 01	3.71E 02	1.30E 02	1.16E 01	3.54E-01	1.93E-01	4.51E-02	2.33E-02	1.23E-02
	H2O --	1.26E 00	1.26E 00	5.10E 00	0.0	0.0	0.0	0.0	0.0	0.0	0.0
IBLANKET	FCA --	2.51E 00	1.97E 01	1.02E 02	3.59E 01	3.12E 00	5.81E-02	1.90E-02	8.10E-03	6.14E-03	4.14E-03
	LIALO2 --	2.01E 01	6.85E 01	2.10E 02	4.77E-05	4.77E-05	4.77E-05	4.77E-05	4.77E-05	4.76E-05	4.76E-05
	H2O --	1.27E 00	1.27E 00	1.58E 00	0.0	0.0	0.0	0.0	0.0	0.0	0.0
OBLANKET	FCA --	1.97E 01	1.55E 02	5.04E 02	1.76E 02	1.53E 01	2.87E-01	9.41E-02	4.02E-02	3.05E-02	2.06E-02
	LIALO2 --	1.50E 02	5.30E 02	1.05E 03	2.32E-04	2.32E-04	2.32E-04	2.32E-04	2.32E-04	2.32E-04	2.32E-04
	H2O --	1.00E 01	1.00E 01	7.79E 00	0.0	0.0	0.0	0.0	0.0	0.0	0.0
REFLECTR	FCA --	5.63E 00	4.47E 01	1.93E 01	3.53E 00	4.03E-01	9.69E-02	8.14E-02	1.29E-02	3.33E-03	5.40E-04
	GRAPHITE--	1.02E 02	1.64E 02	2.37E-06	2.37E-06	2.37E-06	2.36E-06	2.36E-06	2.29E-06	2.23E-06	2.10E-06
	H2O --	5.68E 00	5.68E 00	1.36E-01	0.0	0.0	0.0	0.0	0.0	0.0	0.0
IBLK-JKT	FCA --	3.47E 00	2.73E 01	2.52E 01	7.51E 00	6.47E-01	1.46E-02	6.42E-03	3.49E-03	2.81E-03	1.93E-03
OBLK-JKT	FCA --	1.55E 01	1.22E 02	3.24E 01	5.75E 00	7.04E-01	1.89E-01	1.60E-01	2.49E-02	6.09E-03	7.22E-04
HEADER	FCA --	4.09E 00	3.22E 01	8.99E 00	1.62E 00	2.03E-01	6.05E-02	5.13E-02	7.91E-03	1.85E-03	1.57E-04
	H2O --	2.95E 01	2.95E 01	1.92E-01	0.0	0.0	0.0	0.0	0.0	0.0	0.0
ISLD-JKT	FE1422 --	3.46E 00	2.73E 01	3.33E 01	6.77E 00	4.71E-01	2.96E-03	2.62E-04	3.95E-05	1.46E-05	7.33E-06
OSLD-JKT	FE1422 --	1.93E 01	1.57E 02	3.40E 01	2.83E 00	2.45E-01	9.70E-03	7.33E-03	1.15E-03	2.89E-04	4.89E-05
ISHIELD1	FE1422 --	7.92E 00	6.29E 01	4.04E-01	9.69E-02	6.73E-03	4.13E-05	3.29E-06	4.91E-07	1.83E-07	9.90E-08
	TUNGSTEN--	4.35E 01	8.40E 02	1.26E 01	4.24E-01	1.15E-05	3.83E-06	3.60E-06	2.98E-06	2.59E-06	1.83E-06
	H2O --	7.92E 00	7.92E 00	6.89E-03	0.0	0.0	0.0	0.0	0.0	0.0	0.0
ISHIELD2	FE1422 --	4.80E 00	3.81E 01	2.62E-02	7.00E-03	4.82E-04	2.93E-06	2.13E-07	3.10E-08	1.20E-08	6.39E-09
	B4C --	3.52E 01	8.80E 01	7.87E-03	7.09E-09	7.09E-09	7.09E-09	7.09E-09	7.09E-09	7.09E-09	7.09E-09
	H2O --	4.80E 00	4.80E 00	5.12E-04	0.0	0.0	0.0	0.0	0.0	0.0	0.0
OSHIELD1	TI6AL4V --	2.50E 01	1.17E 02	1.17E-01	2.99E-03	2.43E-06	4.74E-07	3.89E-07	1.10E-07	6.76E-08	4.83E-08
	TIH2 --	3.36E 02	1.31E 03	1.06E 00	3.40E-02	2.29E-08	1.16E-21	5.84E-35	0.0	0.0	0.0
	B4C --	7.75E 01	1.94E 02	7.87E-02	7.91E-08	7.91E-08	7.91E-08	7.91E-08	7.91E-08	7.91E-08	7.90E-08
	H2O --	7.75E 01	7.75E 01	3.55E-02	0.0	0.0	0.0	0.0	0.0	0.0	0.0
OSHIELD2	FE1422 --	3.14E 02	2.49E 03	8.87E-03	1.92E-03	1.21E-04	8.13E-07	8.96E-08	1.33E-08	4.51E-09	1.98E-09
	B4C --	6.73E 01	1.68E 02	9.25E-05	1.03E-10	1.03E-10	1.03E-10	1.03E-10	1.03E-10	1.03E-10	1.03E-10
	H2O --	6.73E 01	6.73E 01	3.99E-05	0.0	0.0	0.0	0.0	0.0	0.0	0.0
OSHIELD3	FE1422 --	4.16E 02	3.30E 03	1.66E-04	9.09E-06	5.89E-07	5.85E-09	2.13E-09	3.56E-10	1.15E-10	4.65E-11
ISLD-JK2	FE1422 --	3.64E 00	2.89E 01	9.52E-04	2.23E-04	1.49E-05	9.66E-03	1.01E-08	1.54E-09	5.51E-10	2.64E-10
IMAG-DWR	FE1422 --	8.80E 00	6.99E 01	2.17E-03	3.54E-04	2.37E-05	1.67E-07	2.72E-08	4.30E-09	1.42E-09	5.83E-10
OMAG-DWR	FE1422 --	1.23E 02	9.74E 02	1.97E-05	1.62E-07	1.28E-08	4.65E-10	3.45E-10	5.56E-11	1.53E-11	3.97E-12
IMAG-HET	304SS --	1.51E 01	1.19E 02	9.40E-04	2.10E-04	1.80E-05	6.26E-07	4.10E-07	1.12E-07	6.52E-08	3.93E-08
OMAG-HET	304SS --	1.23E 02	1.00E 03	2.40E-06	1.22E-07	1.39E-08	2.91E-09	2.49E-09	6.20E-10	3.29E-10	1.85E-10
IMAGNET1	COPPER --	6.55E 00	5.86E 01	9.94E-04	1.23E-06	7.42E-07	4.82E-07	4.03E-07	6.10E-08	1.35E-08	3.11E-10
	304SS --	5.65E 00	4.45E 01	6.50E-05	9.81E-06	9.59E-07	1.17E-07	9.69E-08	1.82E-08	6.93E-09	2.91E-09
	NB3SN --	6.83E-01	5.41E 00	3.65E-05	1.51E-06	3.84E-07	1.06E-07	4.15E-08	5.33E-09	5.29E-09	5.20E-09
	G-10 --	6.26E-01	1.18E 00	1.74E-08	1.81E-14	1.81E-14	1.80E-14	1.80E-14	1.74E-14	1.70E-14	1.60E-14
IMAGNET2	304SS --	2.54E 01	2.00E 02	2.68E-06	2.84E-07	3.30E-08	7.31E-09	6.19E-09	1.06E-09	3.34E-10	1.03E-10
	COPPER --	1.24E 01	1.11E 02	2.05E-05	3.35E-09	2.00E-09	1.29E-09	1.08E-09	1.64E-10	3.62E-11	8.34E-13
	NBTI --	9.37E-01	6.04E 00	2.76E-07	2.40E-09	1.54E-09	5.89E-10	2.46E-10	5.17E-11	5.13E-11	5.05E-11
	G-10 --	2.82E 00	5.31E 00	1.15E-10	1.20E-15	1.20E-15	1.20E-15	1.20E-15	1.16E-15	1.13E-15	1.07E-15
OMAGNET1	304SS --	4.76E 01	3.75E 02	2.20E-07	1.89E-08	2.25E-09	5.34E-10	4.54E-10	8.12E-11	2.78E-11	1.00E-11
	COPPER --	5.53E 01	4.94E 02	4.47E-06	2.70E-10	1.66E-10	1.10E-10	9.19E-11	1.39E-11	3.03E-12	7.03E-14
	NB3SN --	5.76E 00	4.53E 01	1.45E-07	5.95E-09	1.10E-09	2.41E-10	9.93E-11	2.14E-11	2.12E-11	2.09E-11
	G-10 --	5.27E 00	9.92E 00	3.21E-12	8.83E-17	8.85E-17	8.83E-17	8.80E-17	8.54E-17	8.34E-17	7.85E-17
OMAGNET2	COPPER --	1.04E 02	9.33E 02	7.15E-08	1.40E-12	8.46E-13	5.51E-13	4.61E-13	6.93E-14	1.54E-14	3.55E-15
	304SS --	2.14E 02	1.69E 03	9.39E-09	9.63E-10	1.16E-10	2.81E-11	2.39E-11	3.97E-12	1.16E-12	3.01E-13
	NBTI --	7.90E 00	5.10E 01	8.91E-10	4.99E-12	3.22E-12	1.27E-12	5.67E-13	1.69E-13	1.67E-13	1.65E-13
	G-10 --	2.33E 01	4.49E 01	4.39E-14	4.65E-13	4.65E-13	4.64E-18	4.63E-18	4.49E-18	4.39E-18	4.12E-18
SUPT-CYL	G-10 --	1.49E 02	2.81E 02	2.93E-17	2.93E-17	2.93E-17	2.97E-17	2.97E-17	2.83E-17	2.81E-17	2.64E-17
OH/EF	COPPER --	1.22E 01	1.09E 02	2.29E-11	1.23E-16	7.26E-17	4.45E-17	3.70E-17	5.59E-18	1.24E-18	2.85E-20
	304SS --	3.28E 01	2.53E 02	3.03E-12	1.41E-13	1.71E-14	4.15E-15	3.53E-15	6.24E-16	2.09E-16	7.23E-17
	NBTI --	1.26E 00	8.10E 00	2.35E-13	1.15E-15	7.41E-16	2.96E-16	1.36E-16	4.45E-17	4.42E-17	4.34E-17
	G-10 --	1.12E 01	2.10E 01	1.82E-17	2.43E-21	2.43E-21	2.42E-21	2.42E-21	2.34E-21	2.29E-21	2.15E-21
BLDGWALL	CONCRETE--	9.37E 03	2.15E 04	1.39E-05	3.03E-06	2.79E-07	1.33E-09	6.53E-12	2.10E-14	2.10E-14	2.07E-14
TOTAL (W/O REACTOR BLDG)	--	2.94E 03	1.75E 04	6.14E 03	8.91E 02	7.80E 01	2.45E 00	1.36E 00	2.92E-01	1.40E-01	7.37E-02

Table 12-6. Biological Hazard Potential of Air for Reactor Components (km^3 of Air)

REACTOR COMPONENT		VOLUME(M3)	WEIGHT(MT)	TIME AFTER REACTOR SHUTDOWN 0	1YR	10YR	30YR	50YR	100YR	500YR	1000YR
1ST WALL	PCA --	3.64E 00	2.86E 01	3.74E 08	1.25E 08	1.86E 07	1.59E 06	4.17E 05	5.50E 04	1.58E 04	3.81E 03
	H2O --	1.97E 00	1.97E 00	7.52E 05	0.0	0.0	0.0	0.0	0.0	0.0	0.0
MULTIPLR	ZR5FB3 --	3.68E 01	3.28E 02	1.61E 10	8.10E 06	5.71E 05	3.44E 05	2.11E 05	2.81E 03	2.38E 03	2.38E 03
2ND WALL	PCA --	2.60E 00	2.05E 01	9.99E 07	3.27E 07	4.87E 06	4.12E 05	1.06E 05	1.48E 04	4.86E 03	1.59E 03
	H2O --	1.26E 00	1.26E 00	1.73E 05	0.0	0.0	0.0	0.0	0.0	0.0	0.0
IBLANKET	PCA --	2.51E 00	1.97E 01	2.93E 07	9.42E 06	1.35E 06	9.55E 04	1.19E 04	1.50E 03	8.53E 02	5.02E 02
	LIALO2 --	2.01E 01	6.85E 01	1.97E 07	4.77E 02	4.77E 02	4.77E 02	4.77E 02	4.77E 02	4.76E 02	4.76E 02
	H2O --	1.27E 00	1.27E 00	5.25E 04	0.0	0.0	0.0	0.0	0.0	0.0	0.0
OBLANKET	PCA --	1.97E 01	1.55E 02	1.45E 03	4.68E 07	6.66E 06	4.71E 05	5.85E 04	7.45E 03	4.24E 03	2.49E 03
	LIALO2 --	1.58E 02	5.33E 02	9.84E 07	2.32E 03	2.32E 03	2.32E 03	2.32E 03	2.32E 03	2.32E 03	2.32E 03
	H2O --	1.00E 01	1.00E 01	2.60E 05	0.0	0.0	0.0	0.0	0.0	0.0	0.0
REFLECTR	PCA --	5.68E 00	4.47E 01	2.05E 06	5.50E 05	1.16E 05	5.07E 04	4.06E 04	6.19E 03	1.42E 03	8.02E 01
	GRAPHITE--	1.02E 02	1.64E 02	2.37E-02	2.37E-02	2.37E-02	2.36E-02	2.36E-02	2.29E-02	2.23E-02	2.10E-02
	H2O --	5.68E 00	5.68E 00	4.54E 03	0.0	0.0	0.0	0.0	0.0	0.0	0.0
IBLK-JKT	PCA --	3.47E 00	2.73E 01	6.66E 06	2.07E 06	2.83E 05	2.04E 04	2.93E 03	5.51E 02	3.63E 02	2.31E 02
OBLK-JKT	PCA --	1.55E 01	1.22E 02	2.72E 06	7.22E 05	1.81E 05	9.66E 04	7.98E 04	1.21E 04	2.74E 03	1.17E 02
HEADER	PCA --	4.09E 00	3.22E 01	6.01E 05	1.63E 05	4.92E 04	3.05E 04	2.55E 04	3.89E 03	8.69E 02	2.89E 01
	H2O --	2.95E 01	2.95E 01	6.41E 03	0.0	0.0	0.0	0.0	0.0	0.0	0.0
ISLD-JK1	FE1422 --	3.46E 00	2.75E 01	5.42E 06	1.82E 06	3.87E 04	1.78E 03	2.20E 02	1.87E 01	6.22E 00	2.84E 00
OSLD-JKT	FE1422 --	1.98E 01	1.57E 02	2.39E 06	3.72E 05	1.63E 04	4.51E 03	3.65E 03	5.53E 02	1.23E 02	3.95E 00
ISHIELD1	FE1422 --	7.92E 00	6.29E 01	7.42E 04	2.71E 04	5.51E 02	2.51E 01	2.92E 00	2.33E-01	8.24E-02	4.06E-02
	TUNGSTEN--	4.35E 01	8.40E 02	2.25E 06	6.44E 04	1.11E 01	1.20E 00	5.07E-01	3.60E-01	3.10E-01	2.20E-01
	H2O --	7.92E 00	7.92E 00	2.30E 02	0.0	0.0	0.0	0.0	0.0	0.0	0.0
ISHIELD2	FE1422 --	4.80E 00	3.81E 01	5.34E 03	2.01E 03	4.03E 01	1.84E 00	2.02E-01	1.50E-02	5.57E-03	2.95E-03
	B4C --	3.52E 01	8.80E 01	2.62E 02	7.09E-02	7.09E-02	7.09E-02	7.09E-02	7.09E-02	7.09E-02	7.09E-02
	H2O --	4.80E 00	4.80E 00	1.71E 01	0.0	0.0	0.0	0.0	0.0	0.0	0.0
OSHIELD1	TI6AL4V --	2.58E 01	1.17E 02	4.51E 04	3.22E 03	1.69E 00	3.17E-01	2.00E-01	5.67E-02	3.74E-02	3.14E-02
	TIH2 --	3.36E 02	1.31E 03	5.16E 05	3.80E 04	2.29E-02	1.16E-15	5.84E-29	0.0	0.0	0.0
	B4C --	7.75E 01	1.94E 02	2.62E 03	7.83E-01	7.83E-01	7.83E-01	7.83E-01	7.83E-01	7.83E-01	7.83E-01
	H2O --	7.75E 01	7.75E 01	1.18E 03	0.0	0.0	0.0	0.0	0.0	0.0	0.0
OSHIELD2	FE1422 --	3.14E 02	2.49E 03	1.84E 03	6.67E 02	1.15E 01	5.72E-01	7.41E-02	6.58E-03	2.21E-03	1.00E-03
	B4C --	6.73E 01	1.68E 02	3.08E 00	1.03E-03	1.03E-03	1.03E-03	1.03E-03	1.03E-03	1.03E-03	1.03E-03
	H2O --	6.73E 01	6.73E 01	1.33E 00	0.0	0.0	0.0	0.0	0.0	0.0	0.0
OSHIELD3	FE1422 --	4.16E 02	3.30E 03	1.45E 01	3.01E 00	5.32E-02	3.49E-03	1.17E-03	1.58E-04	3.83E-05	5.63E-06
ISLD-JK2	FE1422 --	3.64E 00	2.89E 01	1.87E 02	6.85E 01	1.23E 00	6.11E-02	8.03E-03	7.31E-04	2.41E-04	1.03E-04
IMAG-DWR	FE1422 --	8.80E 00	6.99E 01	3.29E 02	1.08E 02	2.03E 00	1.02E-01	1.83E-02	2.01E-03	5.72E-04	1.74E-04
OMAG-DWR	FE1422 --	1.23E 02	9.74E 02	1.05E 00	3.23E-02	9.60E-04	2.22E-04	1.72E-04	2.59E-05	5.80E-06	2.26E-07
IMAG-HET	304SS --	1.51E 01	1.19E 02	1.60E 02	4.66E 01	5.16E 00	5.14E-01	1.96E-01	3.23E-02	1.10E-02	4.53E-03
OMAG-HET	304SS --	1.28E 02	1.00E 03	1.44E-01	1.63E-02	3.61E-03	1.41E-03	1.12E-03	1.97E-04	6.53E-05	2.15E-05
IMAGNET1	COPPER --	6.55E 00	5.86E 01	2.64E 01	2.46E 00	9.32E-01	2.81E-01	2.04E-01	3.05E-02	6.78E-03	1.55E-04
	304SS --	5.65E 00	4.45E 01	6.51E 00	1.62E 00	2.31E-01	6.35E-02	4.66E-02	7.30E-03	1.98E-03	3.49E-04
	NB3SN --	6.83E-01	5.41E 00	1.29E-01	1.13E-01	7.21E-02	2.77E-02	1.17E-02	2.66E-03	2.64E-03	2.60E-03
	G-10 --	6.26E-01	1.18E 00	5.81E-04	1.81E-10	1.81E-10	1.80E-10	1.80E-10	1.74E-10	1.70E-10	1.60E-10
IMAGNET2	304SS --	2.54E 01	2.00E 02	1.44E-01	2.27E-02	6.17E-03	3.61E-03	3.03E-03	4.72E-04	1.15E-04	1.21E-05
	COPPER --	1.24E 01	1.11E 02	4.86E-01	6.74E-03	2.54E-03	7.56E-04	5.49E-04	8.19E-05	1.81E-05	4.17E-07
	NBTI --	9.37E-01	6.04E 00	6.62E-04	6.14E-04	3.90E-04	1.60E-04	7.44E-05	2.50E-05	2.57E-05	2.53E-05
	G-10 --	2.82E 00	5.31E 00	3.83E-06	1.20E-11	1.20E-11	1.20E-11	1.20E-11	1.16E-11	1.13E-11	1.07E-11
OMAGNET1	304SS --	4.76E 01	3.75E 02	1.09E-02	1.31E-03	4.21E-04	2.61E-04	2.21E-04	3.48E-05	8.75E-06	1.10E-06
	COPPER --	5.53E 01	4.94E 02	1.07E-01	5.23E-04	2.01E-04	6.32E-05	4.66E-05	6.98E-06	1.54E-06	3.54E-08
	NB3SN --	5.76E 00	4.53E 01	2.63E-04	2.48E-04	1.61E-04	6.50E-05	3.03E-05	1.07E-05	1.06E-05	1.04E-05
	G-10 --	5.27E 00	9.92E 00	1.07E-07	8.85E-13	8.85E-13	8.83E-13	8.80E-13	8.54E-13	8.34E-13	7.85E-13
OMAGNET2	COPPER --	1.04E 02	9.33E 02	1.66E-03	2.79E-06	1.06E-06	3.21E-07	2.34E-07	3.49E-08	7.72E-09	1.72E-10
	304SS --	2.14E 02	1.69E 03	4.30E-04	5.49E-05	2.01E-05	1.37E-05	1.17E-05	1.82E-06	4.29E-07	3.50E-08
	NBTI --	7.90E 00	5.10E 01	1.33E-06	1.29E-06	8.47E-07	3.60E-07	1.84E-07	8.43E-08	8.37E-08	8.23E-08
	G-10 --	2.38E 01	4.48E 01	1.43E-09	4.65E-14	4.65E-14	4.64E-14	4.63E-14	4.49E-14	4.32E-14	4.12E-14
SUPT-CYL	G-10 --	1.49E 02	2.81E 02	2.93E-13	2.93E-13	2.93E-13	2.97E-13	2.97E-13	2.80E-13	2.81E-13	2.64E-13
OH/EF	COPPER --	1.22E 01	1.09E 02	5.61E-07	2.76E-10	1.01E-10	2.68E-11	1.83E-11	2.79E-12	6.10E-13	1.42E-14
	304SS --	3.28E 01	2.59E 02	1.46E-07	8.39E-09	3.04E-09	2.02E-09	1.72E-09	2.70E-10	6.75E-11	8.83E-12
	NBTI --	1.26E 00	8.10E 00	3.14E-10	2.93E-10	1.97E-10	8.53E-11	4.51E-11	2.22E-11	2.21E-11	2.17E-11
	G-10 --	1.12E 01	2.10E 01	6.06E-13	2.43E-17	2.43E-17	2.42E-17	2.42E-17	2.34E-17	2.29E-17	2.15E-17
BLDGWALL	CONCRETE--	9.37E 03	2.15E 04	7.28E-01	1.05E-01	9.31E-03	4.50E-05	2.33E-07	1.60E-08	1.60E-08	1.60E-08
TOTAL (W/O REACTOR BLDG)	--	2.94E 03	1.75E 04	1.69E 10	2.28E 08	3.28E 07	3.12E 06	9.60E 05	1.08E 05	3.65E 04	1.40E 04

Table 12-7. Biological Hazard Potential of Water for Reactor Components (km^3 of Water)

REACTOR COMPONENT		VOLUME(M3)	WEIGHT(MT)	TIME AFTER REACTOR SHUTDOWN 0	1YR	10YR	30YR	50YR	100YR	500YR	1000YR
1ST WALL	PCA --	3.64E 00	2.86E 01	1.08E 04	1.89E 03	2.58E 02	4.74E 01	3.23E 01	1.15E 01	7.92E 00	5.11E 00
	H2O --	1.97E 00	1.97E 00	0.0	0.0	0.0	0.0	0.0	0.0	0.0	0.0
MULTIPLR	ZR5FB3 --	3.63E 01	3.22E 02	5.44E 05	2.55E 02	5.65E 01	3.44E 01	2.10E 01	1.04E-01	6.14E-02	6.11E-02
2ND WALL	PCA --	2.60E 00	2.05E 01	2.92E 03	4.90E 02	6.86E 01	1.39E 01	9.97E 00	4.47E 00	3.36E 00	2.25E 00
	H2O --	1.26E 00	1.26E 00	0.0	0.0	0.0	0.0	0.0	0.0	0.0	0.0
IBLANKET	PCA --	2.51E 00	1.97E 01	8.22E 02	1.38E 02	1.78E 01	2.71E 00	1.80E 00	1.25E 00	1.06E 00	7.41E-01
	LIALO2 --	2.01E 01	6.85E 01	2.55E 03	1.59E-02	1.59E-02	1.59E-02	1.59E-02	1.59E-02	1.59E-02	1.59E-02
	H2O --	1.27E 00	1.27E 00	0.0	0.0	0.0	0.0	0.0	0.0	0.0	0.0
OBLANKET	PCA --	1.97E 01	1.55E 02	4.07E 03	6.80E 02	8.79E 01	1.34E 01	8.94E 00	6.20E 00	5.25E 00	3.68E 00
	LIALO2 --	1.53E 02	5.30E 02	1.27E 04	7.73E-02	7.73E-02	7.73E-02	7.73E-02	7.73E-02	7.73E-02	7.72E-02
	H2O --	1.00E 01	1.00E 01	0.0	0.0	0.0	0.0	0.0	0.0	0.0	0.0
REFLECTR	PCA --	5.68E 00	4.47E 01	1.25E 02	1.24E 01	4.64E 00	3.29E 00	2.82E 00	5.16E-01	1.85E-01	6.92E-02
	GRAPHITE--	1.02E 02	1.64E 02	2.97E-06	2.97E-06	2.96E-06	2.95E-06	2.95E-06	2.86E-06	2.79E-06	2.63E-06
	H2O --	5.68E 00	5.68E 00	0.0	0.0	0.0	0.0	0.0	0.0	0.0	0.0
IBLK-JKT	PCA --	3.47E 00	2.73E 01	2.10E 02	2.99E 01	4.12E 00	9.60E-01	7.62E-01	5.75E-01	4.93E-01	3.47E-01
OBLK-JKT	PCA --	1.55E 01	1.22E 02	1.95E 02	1.93E 01	8.46E 00	6.33E 00	5.43E 00	9.16E-01	2.76E-01	7.46E-02
HEADER	PCA --	4.09E 00	3.22E 01	4.84E 01	5.22E 00	2.59E 00	2.01E 00	1.72E 00	2.73E-01	6.90E-02	1.05E-02
	H2O --	2.95E 01	2.95E 01	0.0	0.0	0.0	0.0	0.0	0.0	0.0	0.0
ISLD-JK1	FE1422 --	3.46E 00	2.75E 01	2.69E 02	2.33E 01	8.20E-01	2.68E-02	8.22E-03	1.16E-03	3.34E-04	1.04E-04
OSLD-JKT	FE1422 --	1.93E 01	1.57E 02	3.14E 02	6.42E 00	6.56E-01	2.86E-01	2.43E-01	3.69E-02	8.25E-03	2.83E-03
ISHIELD1	FE1422 --	7.92E 00	6.29E 01	3.13E 00	3.42E-01	1.17E-02	3.65E-04	1.02E-04	1.43E-05	4.27E-06	1.48E-06
	TUNGSTEN--	4.35E 01	8.40E 02	1.49E 02	3.00E 00	7.63E-04	6.55E-04	6.39E-04	5.35E-04	4.66E-04	3.30E-04
	H2O --	7.92E 00	7.92E 00	0.0	0.0	0.0	0.0	0.0	0.0	0.0	0.0
ISHIELD2	FE1422 --	4.80E 00	3.81E 01	1.96E-01	2.52E-02	8.43E-04	2.53E-05	6.63E-06	9.11E-07	2.81E-07	1.06E-07
	B4C --	3.52E 01	8.80E 01	2.36E-06	2.36E-06	2.36E-06	2.36E-06	2.36E-06	2.36E-06	2.36E-06	2.36E-06
	H2O --	4.80E 00	4.80E 00	0.0	0.0	0.0	0.0	0.0	0.0	0.0	0.0
OSHIELD1	TI6AL4V --	2.53E 01	1.17E 02	3.42E 00	2.41E-01	4.20E-05	1.99E-05	1.72E-05	7.19E-06	5.34E-06	3.83E-06
	TIH2 --	3.36E 02	1.31E 03	3.74E 01	2.77E 00	2.54E-06	1.29E-19	6.49E-33	0.0	0.0	0.0
	B4C --	7.75E 01	1.94E 02	2.63E-05	2.63E-05	2.63E-05	2.63E-05	2.63E-05	2.63E-05	2.63E-05	2.63E-05
	H2O --	7.75E 01	7.75E 01	0.0	0.0	0.0	0.0	0.0	0.0	0.0	0.0
OSHIELD2	FE1422 --	3.14E 02	2.49E 03	7.03E-02	7.97E-03	2.26E-04	8.70E-06	2.86E-06	4.03E-07	1.17E-07	3.62E-08
	B4C --	6.73E 01	1.68E 02	3.44E-08	3.44E-03	3.44E-08	3.44E-08	3.44E-08	3.44E-08	3.44E-08	3.44E-08
	H2O --	6.73E 01	6.73E 01	0.0	0.0	0.0	0.0	0.0	0.0	0.0	0.0
OSHIELD3	FE1422 --	4.16E 02	3.30E 03	1.57E-03	3.64E-05	1.14E-06	1.04E-07	6.92E-08	1.04E-08	2.47E-09	2.60E-10
ISLD-JK2	FE1422 --	3.64E 00	2.89E 01	7.44E-03	8.43E-04	2.65E-05	9.51E-07	3.19E-07	4.56E-08	1.29E-08	3.87E-09
IMAG-DNR	FE1422 --	8.80E 00	6.99E 01	1.84E-02	1.33E-03	4.26E-05	1.93E-06	8.75E-07	1.29E-07	3.32E-08	6.70E-09
OMAG-DNR	FE1422 --	1.23E 02	9.74E 02	1.95E-04	4.65E-07	3.39E-08	1.35E-08	1.14E-08	1.73E-09	3.83E-10	1.62E-11
IMAG-HET	304SS --	1.51E 01	1.19E 02	6.99E-03	7.82E-04	9.23E-05	2.91E-05	2.41E-05	1.25E-05	9.76E-06	6.65E-06
OMAG-HET	304SS --	1.28E 02	1.00E 03	2.03E-05	4.37E-07	1.90E-07	1.46E-07	1.33E-07	6.22E-08	4.70E-08	3.16E-08
IMAGNET1	COPPER --	6.55E 00	5.86E 01	4.77E-03	4.11E-05	2.47E-05	1.61E-05	1.34E-05	2.03E-06	4.50E-07	1.04E-08
	304SS --	5.65E 00	4.45E 01	4.64E-04	3.27E-05	7.42E-06	4.52E-06	3.92E-06	1.20E-06	7.51E-07	4.62E-07
	N33SN --	6.83E-01	5.41E 00	2.06E-03	3.57E-04	3.62E-05	2.24E-06	1.88E-06	1.77E-06	1.76E-06	1.73E-06
	G-10 --	6.26E-01	1.18E 00	2.26E-14	2.26E-14	2.26E-14	2.25E-14	2.25E-14	2.18E-14	2.13E-14	2.00E-14
IMAGNET2	304SS --	2.54E 01	2.00E 02	1.89E-05	7.75E-07	3.43E-07	2.63E-07	2.28E-07	5.32E-08	2.71E-08	1.46E-08
	COPPER --	1.24E 01	1.11E 02	9.59E-05	1.12E-07	6.68E-08	4.31E-08	3.61E-08	5.46E-09	1.21E-09	2.78E-11
	N3TI --	9.37E-01	6.04E 00	5.75E-07	2.33E-08	2.11E-08	1.87E-08	1.79E-08	1.72E-08	1.71E-08	1.63E-08
	G-10 --	2.82E 00	5.31E 00	1.51E-15	1.51E-15	1.50E-15	1.50E-15	1.50E-15	1.45E-15	1.42E-15	1.33E-15
OMAGNET1	304SS --	4.76E 01	3.75E 02	1.61E-06	5.12E-08	2.54E-08	1.99E-08	1.75E-08	4.65E-09	2.62E-09	1.52E-09
	COPPER --	5.53E 01	4.94E 02	2.12E-05	8.99E-09	5.52E-09	3.65E-09	3.06E-09	4.64E-10	1.03E-10	2.36E-12
	N33SN --	5.76E 00	4.56E 01	7.46E-06	1.67E-06	1.69E-07	8.70E-09	7.39E-09	7.13E-09	7.02E-09	6.96E-09
	G-10 --	5.27E 00	9.92E 00	1.11E-16	1.11E-16	1.11E-16	1.10E-16	1.10E-16	1.07E-16	1.04E-16	9.81E-17
OMAGNET2	COPPER --	1.04E 02	9.33E 02	3.31E-07	4.67E-11	2.82E-11	1.84E-11	1.54E-11	2.33E-12	5.15E-13	1.18E-14
	304SS --	2.14E 02	1.69E 03	6.50E-03	2.44E-09	1.25E-09	9.83E-10	8.54E-10	1.81E-10	8.09E-11	3.94E-11
	N3TI --	7.90E 00	5.10E 01	2.80E-10	6.83E-11	6.44E-11	5.95E-11	5.77E-11	5.62E-11	5.53E-11	5.43E-11
	G-10 --	2.33E 01	4.43E 01	5.82E-18	5.82E-18	5.81E-18	5.80E-18	5.78E-18	5.61E-18	5.40E-18	5.15E-18
SUPT-CYL	G-10 --	1.49E 02	2.81E 02	3.73E-17	3.73E-17	3.73E-17	3.72E-17	3.71E-17	3.60E-17	3.51E-17	3.33E-17
OH/EF	COPPER --	1.22E 01	1.09E 02	1.12E-10	4.27E-15	2.42E-15	1.48E-15	1.23E-15	1.86E-16	4.12E-17	9.48E-19
	304SS --	3.28E 01	2.53E 02	2.55E-11	3.70E-13	1.93E-13	1.53E-13	1.34E-13	3.46E-14	1.83E-14	1.03E-14
	N3TI --	1.26E 00	8.10E 00	4.83E-14	1.77E-14	1.67E-14	1.56E-14	1.52E-14	1.43E-14	1.47E-14	1.45E-14
	G-10 --	1.12E 01	2.10E 01	3.04E-21	3.04E-21	3.04E-21	3.03E-21	3.02E-21	2.93E-21	2.86E-21	2.69E-21
BLDGWALL	CONCRETE--	9.37E 03	2.15E 04	2.74E-05	3.90E-06	3.49E-07	1.69E-09	8.67E-12	5.33E-13	5.33E-13	5.37E-13
TOTAL (W/O REACTOR BLDG)	--	2.94E 03	1.75E 04	5.79E 05	3.56E 03	5.10E 02	1.25E 02	8.51E 01	2.60E 01	1.83E 01	1.24E 01

corresponding BHP-air values of ∿ 550 km^3, ∿ 100 km^3 and 80 km^3 in the LMFBR system[8]. These LMFBR BHP values are based on the case for a post-fuel reprocessing at 1 yr after discharge, and are dominated by a series of actinide isotopes such as Np, Am and Cm.

We now turn our attention to the decay characteristics of the key radioactive isotopes in each major reactor component. As discussed earlier, the highest activation level in the STARFIRE design is associated with the PCA-steel structures in the first wall/blanket. Based on the result of Fig. 12-2, the PCA activation can be characterized by three major groups of radioactive products. Namely, the activation is determined largely by ^{55}Fe (2.7 yr, EC/no-γ) up to 30 yr after shutdown, by ^{63}Ni (100 yr, β^-/no-γ) from 30 yr to 500 yr and by ^{93}Mo (3500 yr, EC/no-γ) beyond 1000 yr. Isotope ^{93}Mo decays to ^{93m}Nb (13.6 yr, IT) with the branching ratio of ∿ 0.9. The contribution of ^{93m}Nb to the long-term activation shown in Fig. 12-2, in spite of its relatively short half-life, is caused by an equilibrium decay state of ^{93m}Nb with the precursor isotope ^{93}Mo which has a very long half-life.

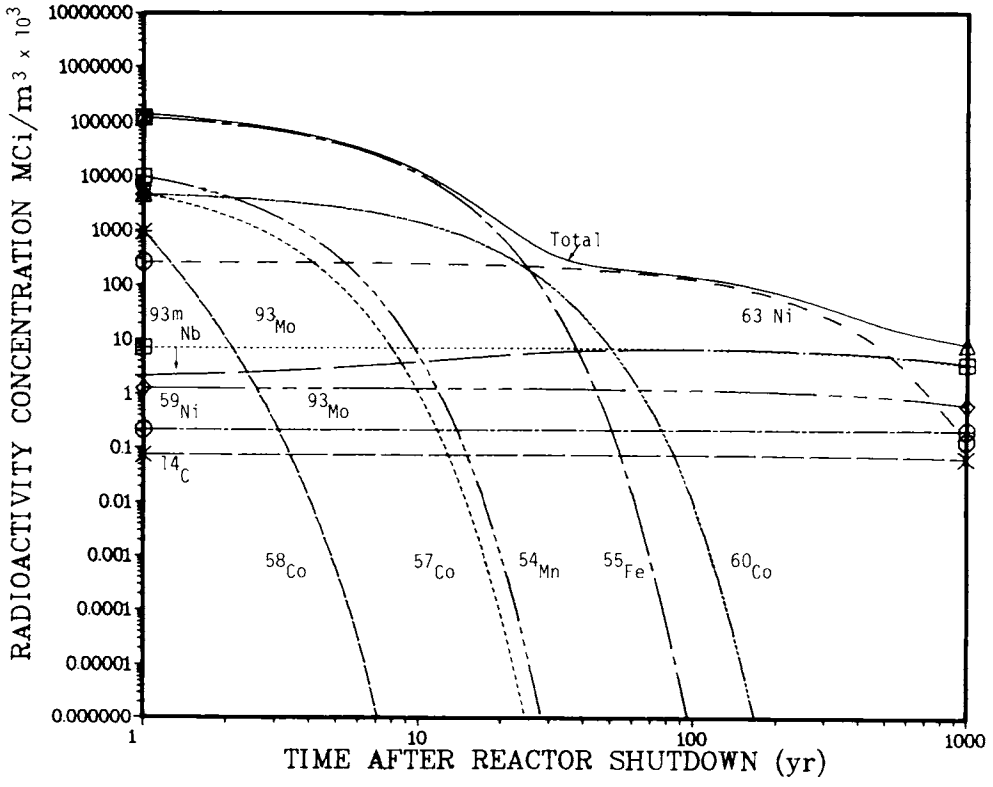

Figure 12-2. Isotopic radioactivity contribution of the PCA first wall.

For this reason the ^{93m}Nb activation concentration increases rather than decreases after shutdown as indicated in Fig. 12-2.

It should be pointed out that ^{93m}Nb is the only major gamma emitter after isotope ^{60}Co(5.3 yr, β^-/γ) decays out, and that decay gamma emission is far more important than β^-decay as far as the long-term radwaste shielding is concerned. As shown in Fig. 12-3, the molybdenum isotope ^{93}Mo is generated by neutron reaction with the Mo element itself, which is one of the primary constituents of PCA ($\sim$ 2% in weight). Specifically, two stable isotopes ^{92}Mo (14.8% in the natural abundance) and ^{94}Mo (9.3%) cause more than 99% of the total ^{93}Mo activation through the $^{92}Mo(n,\gamma)$ and $^{94}Mo(n,2n)$ reactions. In other words, the two Mo isotopes which are only $\sim$ 0.5% of the PCA structural material in the first wall/blanket, are contributing the most significant part of the whole long-term radwaste associated with the STARFIRE blanket design. This observation suggests strong incentives for a possible PCA material processing concerning the minimization of long-term radwaste storage requirement. The first possibility is that the two stable isotopes of ^{92}Mo and ^{94}Mo be

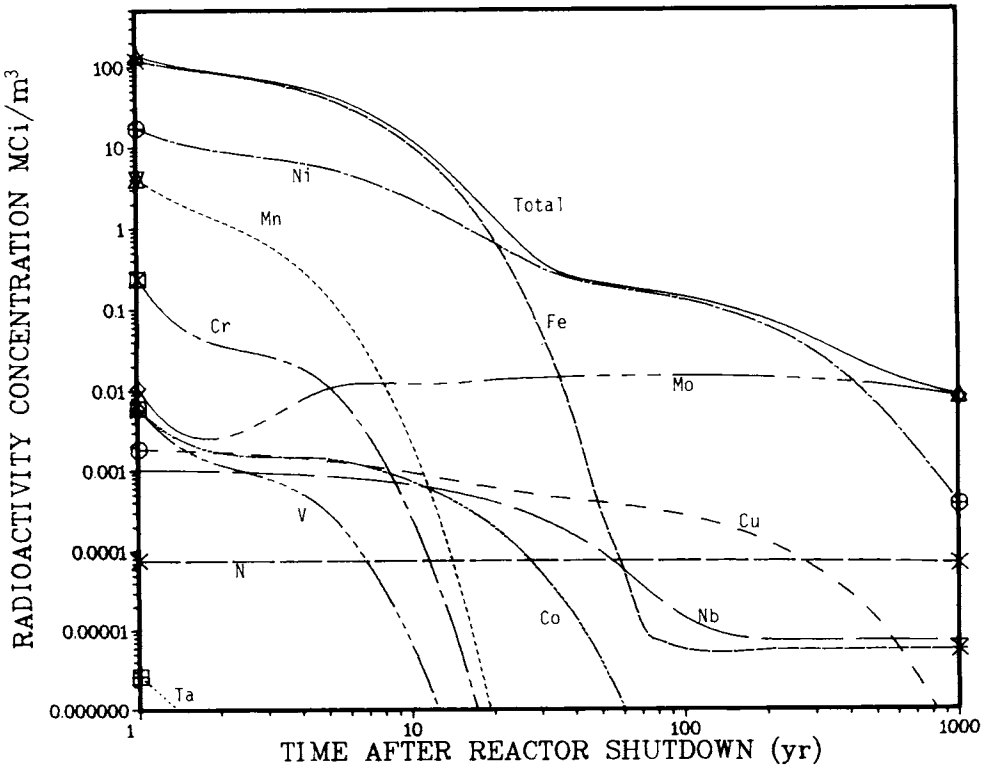

Figure 12-3. Elemental contribution to the PCA first wall radioactivity.

eliminated from the Mo element, or as suggested by R. Conn et al.,[9] the Mo element be tailored to 100% ^{97}Mo (9.6% in the natural abundance) since this isotope is least likely to pose the activation problem among a series of stable Mo isotopes. The second possibility is that isotope ^{93}Mo (or all stable/radioactive Mo isotopes) be separated isotopically (or chemically) after the PCA components are discharged from the reactor. The former method of isotope manupulation can completely eliminate the ^{93}Mo activation but questions regarding the economics and technological feasibilities relevant to such isotopic separation remain yet to be answered.

With regard to the total activation including both γ and β decays, ^{63}Ni is one of the most important isotopes at times of interest. Isotopes ^{62}Ni (3.59% in abundance) and ^{64}Ni (0.91%) give rise to the activation, and R. Conn et at.,[9] have also suggested a Ni element tailoring to 100% ^{61}Ni for a type 316 stainless steel structural material. When both ^{97}Mo and ^{61}Ni isotope selections are employed in ensemble, the long-term activation of the STARFIRE design will be drastically reduced. However, it should be mentioned that the ultimate activation level will be governed by the ^{14}C (5730 yr, β^-/no-γ) activation of $\sim$ 20 kCi/m^3 (still classified as a medium-level waste), produced from a trace element of nitrogen via the $^{14}N(n,p)$ reaction. The implication is that in order to fully exploit the isotopic tailoring technique, one would need a careful control of impurity contents in the structural material.

According to Fig. 12-4, many of the radioactive products in the Zr_5Pb_3 neutron multiplier rapidly decay to stable isotopes in a few years after shutdown. The remaining activation in this multiplier is determined by relatively short-lived isotopes of ^{204}Tl (3.8 yr, β^-/EC/no-γ rays observed between 0.1 and 2.5 MeV), ^{90}Sr(28.8 yr, β^-/no-γ) and ^{90}Y(64 hr, β^-/γ) and by two extremely long-lived isotopes, ^{93}Zr(1.53 x 10^6 yr, β^-/no-γ) and ^{205}Pb(1.4 x 10^7 yr, EC/no-γ). The continual presence of short-lived ^{90}Y isotope up to a few hundred years is due to the two-step decay chain of $^{90}Sr \xrightarrow{\beta^-} {}^{90}Y \xrightarrow{\beta^-} {}^{90}Zr$. It should be noted that the very toxic ^{90}Sr (the MPC-water values are 3 x 10^{-7} Ci/m^3 and 4 x 10^{-5} Ci/m^3 for soluble and insoluble forms, respectively) is generated in significant amounts (order of 1 kCi/m^3 up to 100 yr). In comparison, the tritium MPC-water is given as 3 x 10^{-3} Ci/m^3. An average annual discharge of ^{90}Sr in replaced blanket sectors yields $\sim$ 3 kCi up to $\sim$ 50 years. This discharge rate is compared to a typical ^{90}Sr fission produce of $\sim$ 1.3 MCi/GWe-yr discharged from an LMFBR[8] reactor.

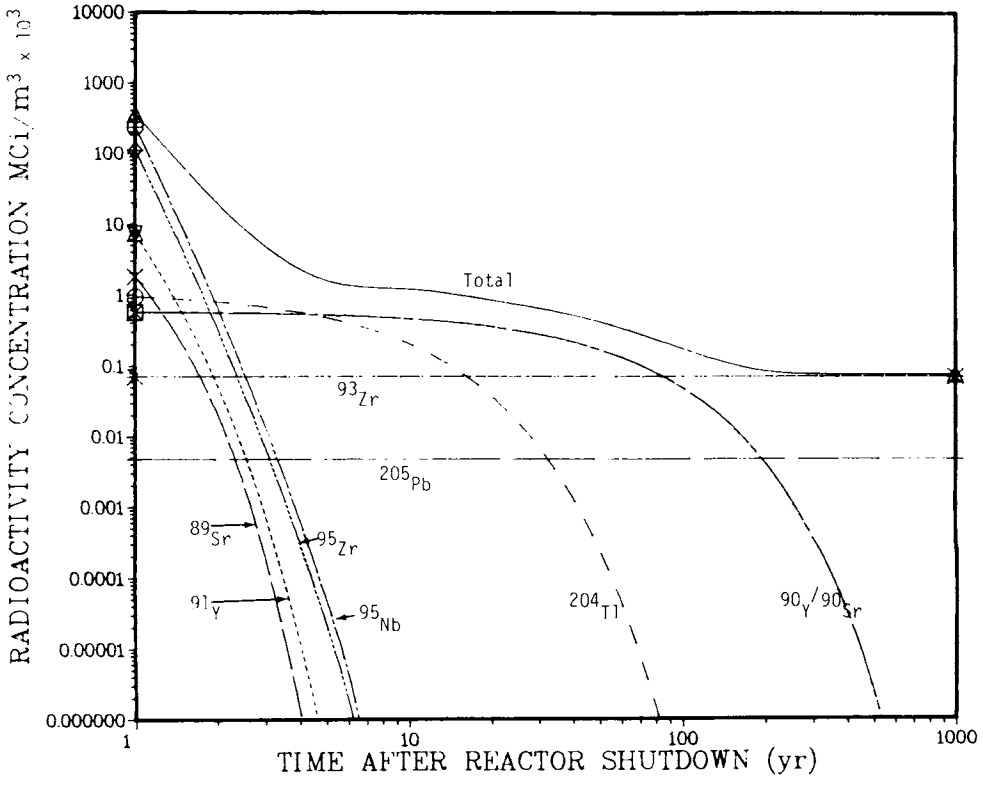

Figure 12-4. Isotopic radioactivity contribution of the Zr_5Pb_3 neutron multiplier.

Isotope ^{90}Sr is induced by the (n,n´α) neutron reaction with ^{94}Zr which is ∿ 17.4% in the naturally occuring abundance. This ^{94}Zr isotope is also the major source for the long-term activation of ^{93}Zr generated via the $^{94}Zr(n,2n)$ reaction. Therefore, any isotopic tailoring of Zr leading to a complete elimination of ^{94}Zr can be expected to result in a Zr_5Pb_3 activation level of only ∿ 5 Ci/m^3 being contributed solely by the Pb activation within ∿ 50 yr after shutdown. This observation should be emphasized not only from the standpoint of reducing the absolute activation level but from a consideration for the substantial production curtailment of toxic radioactive wastes such as ^{90}Sr and ^{93}Zr.

At times shortly after shutdown, the $LiAlO_2$ breeder material contains many short-lived isotopes such as ^{6}He(0.8s, β^-/no-γ), ^{8}Li(0.84s, β^-/α), ^{16}N(7.1s, $\beta^-/\alpha/\gamma$), ^{24}Na(15 hr, β^-/γ), ^{27}Mg(9.5m, β^-/γ) and ^{28}Al(2.2m, β^-/γ). Among those, ^{24}Na is the most important isotope. Beyond a few weeks after shutdown the $LiAlO_2$ activation is determined solely by ^{26}Al(7.2 x 10^5 yr, β^+/EC/γ) as

shown in Fig. 12-5. Note that there are two branches associated with the $^{27}Al(n,2n)$ reaction, i.e., $^{27}Al(n,2n)\ ^{26}Al$ and $^{27}Al(n,2n)^{26m}Al$. Unlike the normal internal transition decay of meta-stable isotopes, $^{26m}Al(6.3s,\ \beta^{+}/no\text{-}\gamma)$ decays to stable isotope ^{26}Mg with emission of β^{+}. Therefore, the production rate of ^{26}Al, and hence, the $LiAlO_2$ activation level strongly depends upon the reaction branching ratio leading to this particular isotope generation. Unfortunately, the reaction branching ratio is not well known[10] at present and somewhat arbitrary values are assumed in the literatures.[11] An equal probability for both reaction paths (^{26}Al and ^{26m}Al production paths) is assumed in the present analysis. When the calculated value of the $^{27}Al(n,2n)\ ^{26}Al$ reaction cross section given in Ref. (10) is used, the ^{26}Al activation shown below would be increased by a factor of two.

The $LiAlO_2$ activation level of $\sim 2\ Ci/m^3$ is somewhat too high to be classified as a low-level waste (LLW) and might impact the lithium resource unless the aluminum isotope is separated from the irradiated breeding material. The lithium inventory in the blanket is estimated to be $\sim$ 64 MT based on the

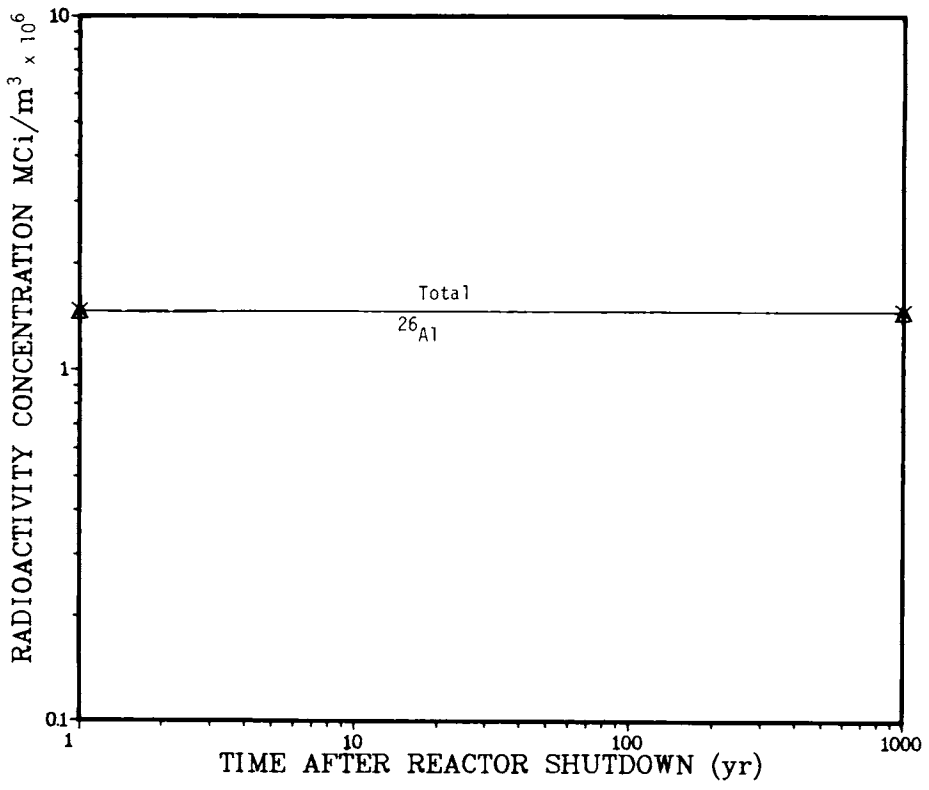

Figure 12-5. Isotopic radioactivity contribution of the $LiAlO_2$ breeder.

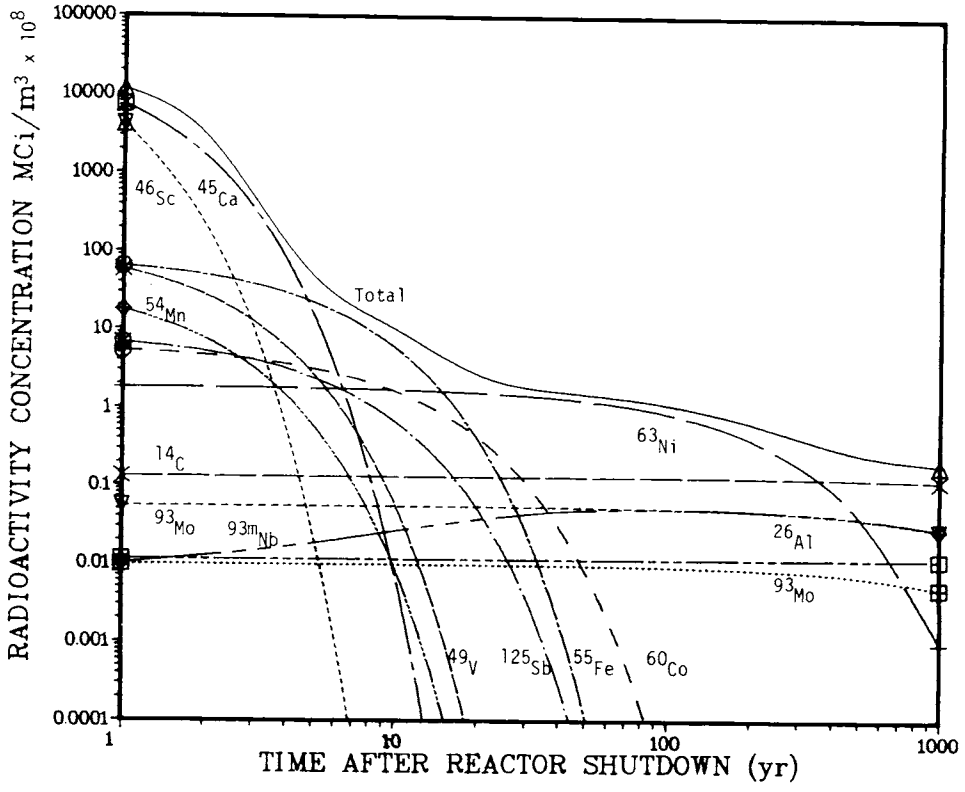

Figure 12-6. Isotopic radioactivity contribution of the Ti6Al4V shield.

natural lithium composition. Enrichment of the ^{6}Li concentration to 60%, raises the natural Li resource requirement to ∿ 510 MT per reactor load, and to ∿ 2550 MT over a 30-yr plant life. Of course, these resource requirements include unnecessary ^{7}Li of ∿ 53%, which could be utilized in other applications (e.g., battery program). According to the UWMAK-III estimate, the lithium resource which is considered available in the United States at up to 3X present (1976) price is ∿ 10^7 MT. More precise evaluation of the $LiAlO_2$ activation, which is currently somewhat uncertain due to the uncertainty in the ^{27}Al(n,2n) reaction branching is desirable. Recycling of $LiAlO_2$ appears to be technically and economically feasible but needs to be addressed in future studies in detail.

Figures 12-6 and 12-7 show radioactivity contributions in the primary structural materials of Ti6Al4V and Fe1422 in the high flux shield (HFS) and the medium flux shield (MFS) regions, respectively. The activation in the Ti6Al4V shield structure steeply decreases in 10 yr after shutdown due

primarily to the fast decays of ^{24}Na, ^{45}Ca (165d, β^-/γ), ^{46}Sc(84d, β^-/γ) and ^{48}Sc(44hr, β^-/γ). After 10 yr, the radioactivity in this material is dictated by the impurity activation products such as ^{63}Ni, ^{93m}Nb, ^{93}Mo and ^{14}C. It should be noted that by virtue of the comprehensive shield optimization, the Ti6Al4V - structured HFS shield exhibits an activation level of 0.1 Ci/m^3 or less ($\sim$ 2 Ci in total) within 10 yr after shutdown in spite of the fact that the shield is exposed to a relatively high neutron-fluence of $\sim 10^{16}$ m^{-2}s^{-1} during reactor operation. The radioactivity concentration of 0.1 Ci/m^3 is normally classified as the upper limit of LLW. As discussed earlier for the PCA structure, some more elaboration on the impurity level control for Ti6Al4V, particularly on Ni and N impurity control would substantially reduce the long-term activation level in this shield after the short-lived primary activation has decayed.

As is the case with most of the iron-base alloys, the Fe1422 activation does not significantly decrease up to $\sim$ 10 yr after shutdown, due to the large ^{55}Fe-production. Another feature characterizing the Fe1422 activation is the

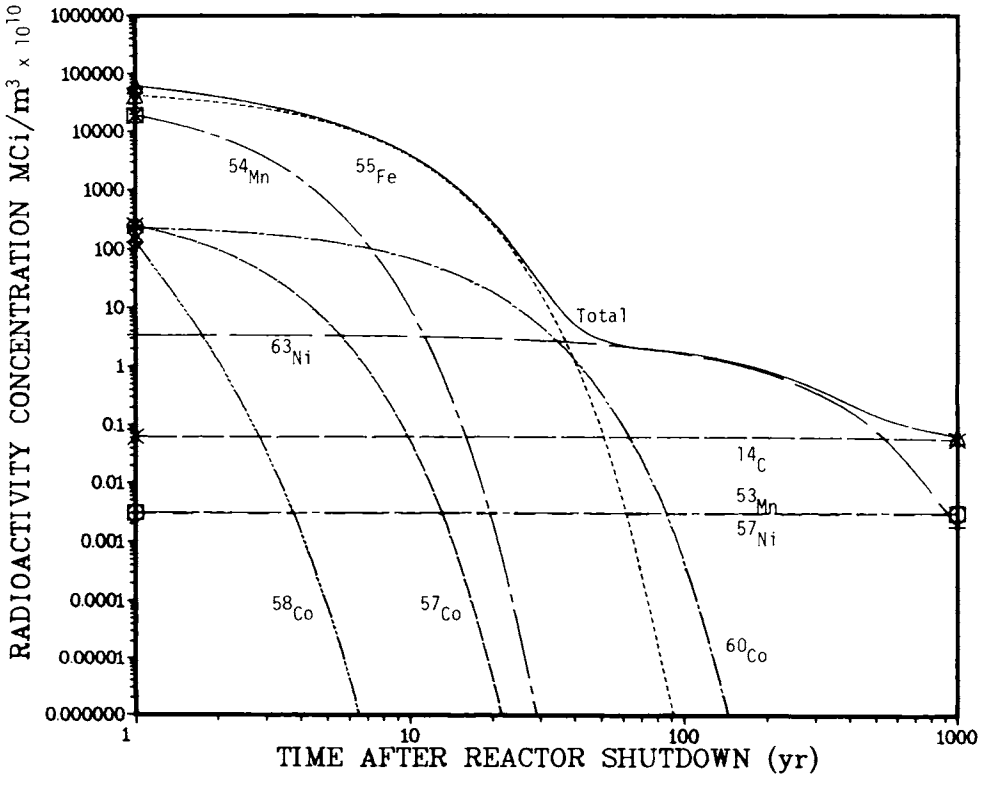

Figure 12-7. Isotopic radioactivity contribution of the Fe14Mn2Ni2Cr shield.

excitation of a series of radioactive manganese isotopes such as ^{53}Mn(3.7 x 10^6 yr, EC/no-γ), ^{54}Mn(312d, EC/γ) and ^{56}Mn (2.6 hr, β^-/γ). From the long-term activation standpoint, the ^{53}Mn isotope is the most important, although the associated activation level is not more than that of ^{14}C caused by the nitrogen impurity, as shown in Fig. 12-7. The rapid decrease in activation to < 3 x 10^{-3} Ci/m^3 ($\sim$ 0.8 Ci in total) within $\sim$ 30 yr after shutdown in this primary shield structure provides a great potential for material recycling of the shield material which is large in volume ($\sim$ 320 m^3 in MFS only, for instance).

The radioactivity decay of the TF-magnet superconductors, Nb_3Sn and NbTi is shown in Figs. 12-8 and 12-9, respectively. The variation of both conductor radioactivities is more or less identical and is characterized primarily by the two radioactive isotopes ^{93m}Nb and ^{94}Nb (2.0 x 10^4 yr, β^-/γ). The unique features which distinguish one from the other are found in the relatively short-lived isotopes such as ^{123}Sn(129d, β^-/γ) and ^{125}Sb(2.7 yr, β^-/γ)

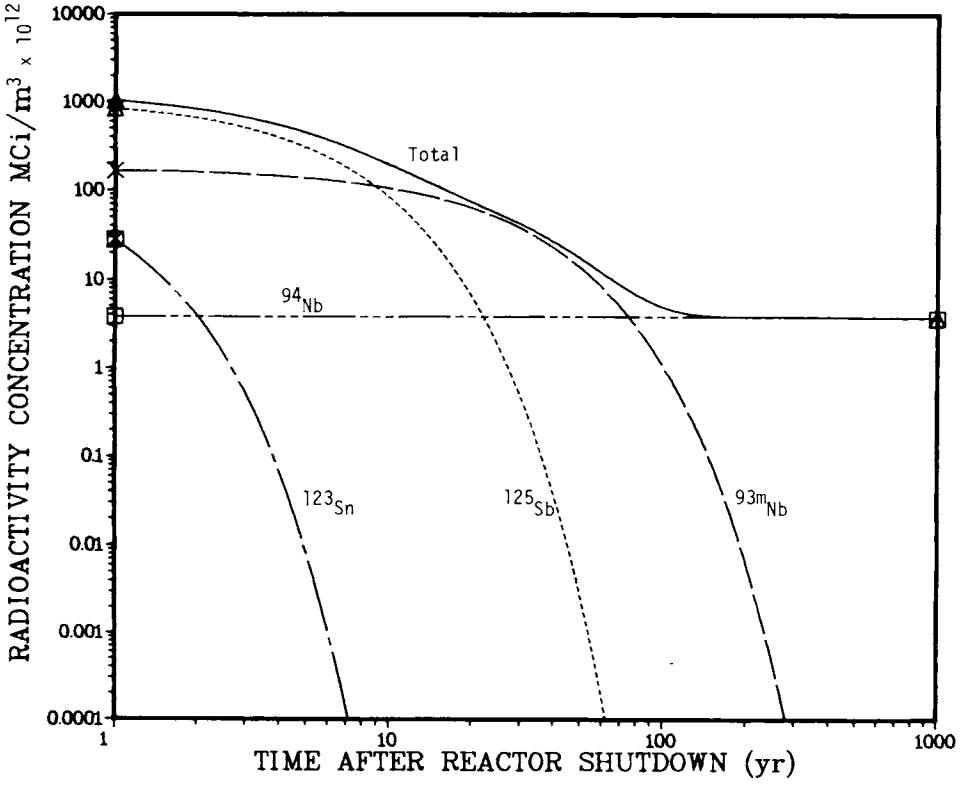

Figure 12-8. Isotopic radioactivity contribution of the Nb3Sn superconductor.

produced from Sn in Nb_3Sn, and ^{45}Ca and ^{45}Sc produced from Ti in NbTi. The fact that both conductor activation levels are below the LLW limit even at reactor shutdown is very promising for the recycling possibility of these resource-limited materials.

Despite the fact that ^{93}Nb is the only naturally abundant niobium element, the radioactivity analysis regarding this element is troublesome primarily because of the large uncertainties in the associated activation cross sections. In addition, the fact that there are many metastable niobium isotopes such as ^{92m}Nb, ^{93m}Nb, ^{94m}Nb, ^{95m}Nb, etc. makes the analysis more difficult. In particular, the reaction branching ratios for a sequence of the $^{93}Nb(n,\gamma)^{94}Nb/^{94m}Nb(n,\gamma)^{95}Nb/^{95m}Nb$ reactions and for the $^{93}Nb(n,2n)^{92}Nb/^{92m}Nb$ reactions are the central issues in this regard.[12-18] Fortunately, in the STARFIRE design, niobium is used only as the superconducting materials that are located in a low radiation field. Therefore, it is likely that the impact of these cross section uncertainties is small since the absolute magnitude of radioactivity is quite low from a practical standpoint. The only exception in which a more refined analysis would be required is related to the inboard section of the superconducting magnet which is exposed to a non-trival neutron fluence.

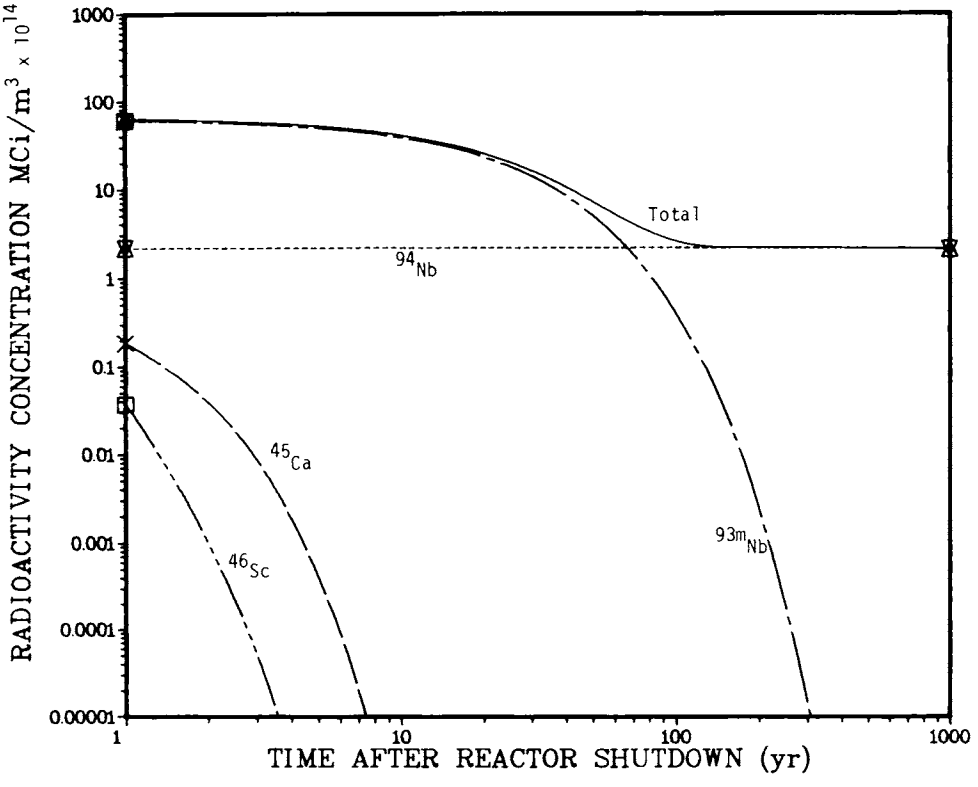

Figure 12-9. Isotopic radioactivity contribution of the NbTi superconductor.

Another important aspect of the reactor component activation analysis is related to penetration system components and their shield materials. In general, the direct radiation streaming in neutral beam ports, vacuum pumping ports, divertors, etc. in previous tokamak designs is one of the primary sources of the design complexities and consequent high radioactive shield inventories. In the STARFIRE design, a serious effort has been devoted to minimizing possible design difficulties as well as activation associated with major penetrations at its early phases of the conceptual design. A key feature of STARFIRE relevant to the vacuum pumping system is the elimination of any direct radiation streaming path from the plasma to the cryopumps. The STARFIRE design also features the selection of lower hybrid rf system over neutral beam heating systems and limiter impurity control concept over divertors. These design features have brought about overall shielding design simplicity as well as substantial reduction in the high-level long-term activation inventory regarding the major penetration shields.

Tables 12-8 through 12-10 summarize results of the radioactivity analysis for the three penetration subsystems of the limiter, rf-duct and vacuum pumping designs. The analysis was carried out at several key locations of each subsystem based on the results of the multi-dimensional shielding calculations (see Sec. 11.3). Because of the low activation characteristics inherent in both candidate limiter structural materials of Ta-5W and V-20Ti, none of the limiter system components exhibit any appreciable residual radioactivity beyond 30 yr after shutdown. An interesting feature associated with the Ta-5W structural material is the high burn-up or transmutation rate of ^{181}Ta ($\sim$ 99.99% in the natural abundance). Most of the ^{181}Ta burn-up yields ^{182}Ta(115d, β^-/γ) leading to a production of ^{182}W (26.3% in the abundance) via the β^--decay. At 6 yr after reactor start-up for instance, the ^{181}Ta burn-up rate reaches $\sim$ 20% and the ^{182}W content reaches $\sim$ 500% of its initial value. This high transmutation rate from tantalum to tungsten would eventually result in a different structure composition. Such a composition change is, however, expected not to appreciably impact the material integrity or chemical stability.[19] (See Chapter 8).

Table 12-8. Radioactivity Analysis for the Limiter System[a] (MCi/m^3)

	Time After Shutdown (yr)							
	0	1	10	30	50	100	500	1000
(A) Ta-5W								
A[b]	4.15(2)	4.66(1)	6.46(-7)	1.08(-22)	--	--	--	--
B[c]	4.21(2)	4.68(1)	3.29(-7)	4.31(-23)	--	--	--	--
C[d]	6.93(1)	7.65(0)	4.14(-8)	4.51(-24)	--	--	--	--
D[e]	8.13(0)	1.61(0)	1.19(-1)	1.80(-3)	9.91(-4)	6.75(-4)	3.89(-5)	6.68(-6)
(B) V-20Ti								
A[b]	6.61(1)	2.86(0)	2.75(-3)	5.98(-10)	--	--	--	--
B[c]	7.23(1)	8.73(-1)	8.01(-4)	1.74(-10)	--	--	--	--
C[d]	1.00(1)	4.22(-2)	3.72(-5)	8.09(-12)	--	--	--	--
D[e]	9.05(0)	1.91(0)	1.42(-1)	2.01(-3)	1.07(-3)	7.26(-4)	4.19(-5)	7.20(-6)

(a) Based on a two-dimensional discrete-ordinate transport calculation; neutron wall load - 3.6 MW/m^2; integral neutron wall load - 18 $MW\text{-}yr/m^2$ before shutdown; Zone average radioactivity concentration.

(b) 62% (Ta-5W/V-20Ti) + 38% H_2O.

(c) 84% (Ta-5W/V-20Ti) + 16% H_2O.

(d) 10% (Ta-5W/V-20Ti) + 15% H_2O.

(e) 100% Fe1422.

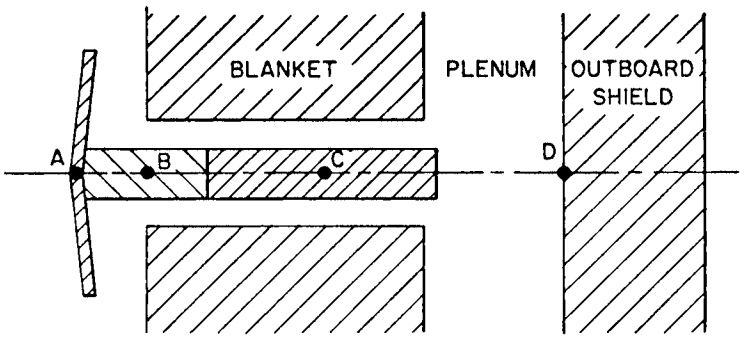

Table 12-9. Radioactivity Analysis for the rf-waveguide System[a] (MCi/m^3)

	Time After Shutdown (yr)							
	0	1	10	30	50	100	500	1000
Detector A[b]	5.73(1)	2.30(1)	2.02(0)	3.16(-2)	6.79(-3)	4.15(-3)	1.00(-3)	6.12(-4)
B[c]	3.05(0)	1.25(0)	1.10(0)	1.75(-3)	4.03(-4)	2.59(-4)	7.83(-5)	5.00(-5)
C[d]	4.31(-3)	1.68(-3)	1.47(-4)	2.38(-6)	5.55(-7)	3.55(-7)	1.04(-7)	6.59(-8)
D[d]	2.33(-5)	8.05(-6)	6.90(-7)	1.14(-8)	2.75(-9)	1.72(-9)	3.82(-10)	2.28(-10)
E[e]	8.93(-9)	4.12(-9)	2.89(-10)	1.75(-12)	1.17(-13)	6.28(-14)	3.78(-15)	7.89(-16)
S1[e]	5.47(-2)	2.49(-2)	1.75(-3)	1.06(-5)	6.93(-7)	3.70(-7)	3.49(-8)	1.72(-8)
S2[e]	5.61(-11)	2.37(-11)	1.56(-12)	9.37(-15)	7.64(-16)	4.44(-16)	2.68(-17)	5.63(-18)

(a) Based on a Monte-Carlo run with 20,000 neutron histories; neutron wall load - 3.6 MW/m^2; integral neutron wall load - 18 $MW\text{-}yr/m^2$ before shutdown.

(b) 22% PCA + 8% H_2O.

(c) 58% PCA + 8% H_2O.

(d) 15% PCA + 11% H_2O.

(e) 100% Fe1422.

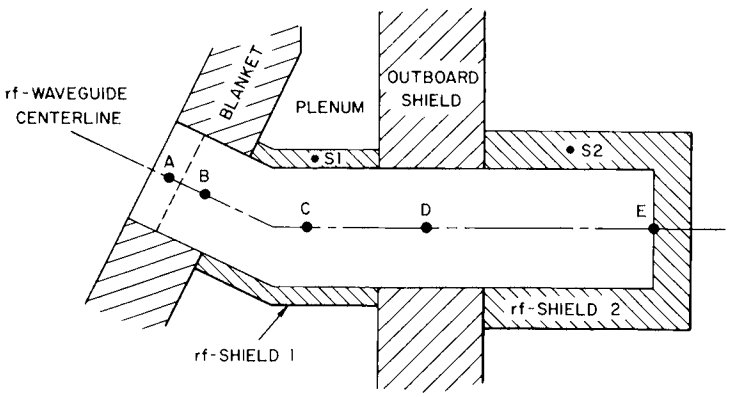

Table 12-10. Radioactivity Analysis for the Vacuum Pumping System[a] (MCi/m^3)

		Time After Shutdown (yr)							
		0	1	10	30	50	100	500	1000
Detector	A[b]	6.53(-5)	2.18(-6)	1.32(-10)	1.24(-11)	9.56(-12)	7.52(-12)	3.37(-12)	3.03(-12)
	B[c]	7.38(-8)	3.21(-8)	2.21(-9)	1.35(-11)	9.49(-13)	5.17(-13)	3.38(-13)	9.16(-15)
	C[c]	2.03(-9)	9.05(-10)	6.31(-11)	3.83(-13)	2.60(-13)	1.40(-14)	8.56(-16)	1.90(-16)
	D[c]	3.47(-6)	1.54(-6)	1.07(-7)	6.51(-10)	4.45(-11)	2.40(-11)	1.47(-12)	3.28(-13)
	E[b]	4.48(-6)	1.56(-7)	9.91(-10)	7.74(-13)	5.80(-13)	4.58(-13)	2.11(-13)	1.90(-13)
	F[c]	3.10(-9)	1.40(-9)	9.78(-11)	5.93(-13)	3.97(-14)	2.13(-14)	1.30(-15)	2.86(-16)
	G[c]	2.57(-12)	1.16(-12)	8.15(-14)	4.94(-16)	3.29(-17)	1.76(-17)	1.07(-18)	2.34(-19)

(a) Based on a Monte-Carlo run with 20,000 neutron histories; neutron wall load - 3.6 MW/m^2; integral neutron wall load - 18 $MW\text{-}yr/m^2$ before shutdown.

(b) 5% Ti6Al4V + 65% TiH_2 + 15% B_4C + 15% H_2O.

(c) 70% Fe1422 + 14% B_4C + 15% H_2O.

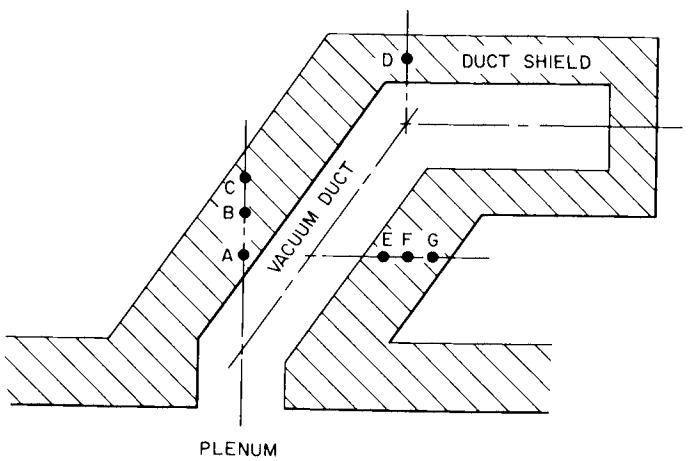

Due to the fact that the grill structure of rf-waveguides is made of PCA steel, the residual radioactivity in this system shows a high activation level over a long time period after shutdown. Actually, the rf-waveguide activation is the largest long-term radwaste among the penetration subsystems. In particular, the waveguide portions embedded in the first wall/blanket region exhibit an activation level almost comparable to that of the PCA wall/blanket structure. Fortunately, however, the material volume of such portions to be exposed to high neutron fluence is quite small ($\sim$ 2.7 m^3) in STARFIRE because of the nature of the grill structure design. The radioactivity concentration of the rf-ducts beyond the vacuum plenum region is either comparable to or only slightly higher than that in the outboard bulk shield region which is not affected by the presence of the rf-penetration.

The post-shutdown activation in the shields around the vacuum pumping ports is low. This stems from the following:

1. there is no direct neutron streaming path between the plasma and the vacuum system;
2. the vacuum pumping ports possess multiple duct bends; and
3. the region exposed to a relatively high neutron fluence consists of intrinsically low-activation shield materials such as Ti6Al4V and TiH_2.

Although the iron-base shield, Fe1422 is used in a large quantity as the primary shielding medium, it does not appear to pose any long-term activation problem largely because of its location in a relatively low neutron-fluence region. It should be noted that the total shielding volume for the torus evacuation system is estimated to be $\sim$ 1200 m^3 which is compared to $\sim$ 1450 m^3 of the total bulk shield volume. This clearly indicates the importance of the vacuum system shielding not only from the activation standpoint but from the material inventory consideration. By virtue of adequate selection of the shielding materials in the present design and the basic design feature preventing the direct radiation flow into the vacuum ducts and pumps as already mentioned, the majority of the vacuum system shields appear to be promising for recycling on a reasonably short time-scale. This will be examined in more detail shortly.

12.3 MATERIAL RECYCLING

As shown in the previous section it is conceivable that material requirements for construction of a very large number of reactors would eventually pose resource availability and radwaste problems unless a capability of material recycling is established. Economic and technological considerations will ultimately determine the practicality of such material recycling. Decision on material recyclability for each piece of reactor components involves extremely difficult problems because of its dependence on many factors such as gemoetry of material, duration of cool-down, method of material handling, etc. There is presently no information on the "back-end" of the fusion material cycle that shows the relative economic, safety and technological merit of one material versus the other in respect to waste disposal and recycling. This lack of information forces the designer to use some judgment in material selection. In STARFIRE, a general guideline, based on the activation level after shutdown as discussed below, was adopted as one of the primary criteria for material selection. The assumption here is that the lower the activation level of a material after shutdown is, the higher is its potential for economic recycling.

In general, radioactive waste can be defined by different waste categories, and various categories have been proposed. As a general qualitative classification of radwaste, Ref (8) cites the following:

- High-level waste (HLW): requires cooling by forced convection, and heavy shielding during transportation
- Medium-level waste (MLW): shielding during transportation and handling is necessary but no cooling by forced convection. (the dose rate at the surface of drums used for disposal is greater than 200 mrem/hr)
- Low-level waste (LLW): no shielding, the dose rate is less than 200 mrem/hr.

Another definition for the waste categorization is given by D. Richter and W. Körner (20)(*) and is also cited in Ref. (8) based on an evaluation of radwastes from fission nuclear power plants. The definition is presented in terms of both weight-base and volume-base radioactivity concentrations, i.e.,

(*) According to Ref. (20), the radioactivity concentration between 10^{-4} and 10^{-5} Ci/ℓ (or Ci/kg) is not categorized. In the present analysis, this concentration interval is classified as LLW.

HLW: > 10 Ci/ℓ (or Ci/kg)

MLW: 10^{-4} - 10 Ci/ℓ (or Ci/kg)

LLW: < 10^{-4} Ci/ℓ (or Ci/kg)

This classification seems useful for application to the material recycling potential. From the recycling considerations, the LLW category offers the best potential. This classification is simple and useful as it is based on the curie level as the measure of radioactivity. However, there seem to be several difficulties in utilizing this categorization as the criterion for the recyclability potential because of the facts that:

1. it cannot distinguish the qualitative differences in radioactive wastes, e.g., differences in decay modes such as γ- and β-decays.
2. even among those of the same kind of decay mode, the decay energy dependence is not taken into account; and
3. the weight- and volume-base criteria sometimes result in inconsistent classifications.

The first two aspects described above are important because decay gamma rays are much more interactive with human bodies than are beta particles. In addition, the degree of the interaction strongly depends upon its energy as well as its intensity. Therefore, considerations of material recycling and biological effects caused by direct contact with radioactive wastes to be recycled, suggest a need for an explicit measure that can account for differences in decay mode, decay energy, intensity, etc. with a particular emphasis on decay gamma emitters.

In NRC Title 10/Chapter 1/Part 20,[6] two guidelines are given regarding the radiation exposure limits in restricted and unrestricted areas. In the case of the unrestricted (uncontrolled) area exposure, the guideline shows the maximum permissible levels of:

1. accumulated exposure of 0.5 Rem/yr;
2. continuous exposure of 2 mrem/hr; and
3. continuous exposure of 100 mrem/7 days;

resulting in the most restrictive permissible level of $\sim$ 0.057 mrem/hr (from item (1) above) as an acceptable exposure rate for the general public. Note

that the dose level of 0.5 Rem/yr or continuous dose of 0.057 mrem/hr is just five times a dose rate from the natural background of 0.1 Rem/yr[21]. In the case of the restricted (controlled) area exposure, the NRC guideline of 1.25 Rem/calendar-quarter leads to a maximum allowable dose rate of 2.5 mrem/hr based on an occupational work of 40 hr/week and 50 week/yr. Therefore, a reasonable criterion to be used for the material recycling seems to be:

1. a dose limit of 0.05 mrem/hr for recycling to the general public; and
2. a dose limit of 2.5 mrem/hr for recycling for a limited use such as recycling to fusion reactor construction.

A comparison of the waste-level classification criterion defined earlier and the dose criterion shown here will be made shortly.

Prior to the recycliability analysis, an investigation was performed with regard to the sensitivity of biological dose rates to the source volume size. Figure 12-10 examines the surface dose dependence as a function of source size based on a one-dimensional spherical model. The source of 1 photon/cm^3/s is assumed to be uniformly distributed over the spherical volume. Examples shown are the case for the PCA stainless steel as a representative radwaste of heavy materials and the case for the $LiAlO_2$ breeder as a counterpart of lighter materials. The decay gamma energy ranges examined are those typical at times beyond 1 yr after shutdown. It is seen that both PCA and $LiAlO_2$ exhibit a more or less identical trend on the surface dose variation, showing a quick dose saturation with test-piece volume. In fact, the contact biological dose for the soft gamma-ray source does not show any appreciable variation with the test-piece size in both cases of heavy and light materials. Clearly, such a trend toward small variation with volume stems from the well-known characteristics of the self-shielding of gamma-rays by the source materials themselves. The self-shielding effect is particularly strong in heavy (high Z-number) materials as shown in Fig. 12-11. The results presented in Figs. 12-10 and 12-11 indicate that the biological surface dose is not overly sensitive to the size of the piece to be handled. In addition, the fact that the dose level tends to saturate for a reasonably large volume suggests a possibility of deriving an upper bound dose estimate without going into details of the geometeries of pieces to be handled in the recycling processes. Although this conclusion is not quite precise since the dose dependence on geometrical shapes has not been examined yet, it is very

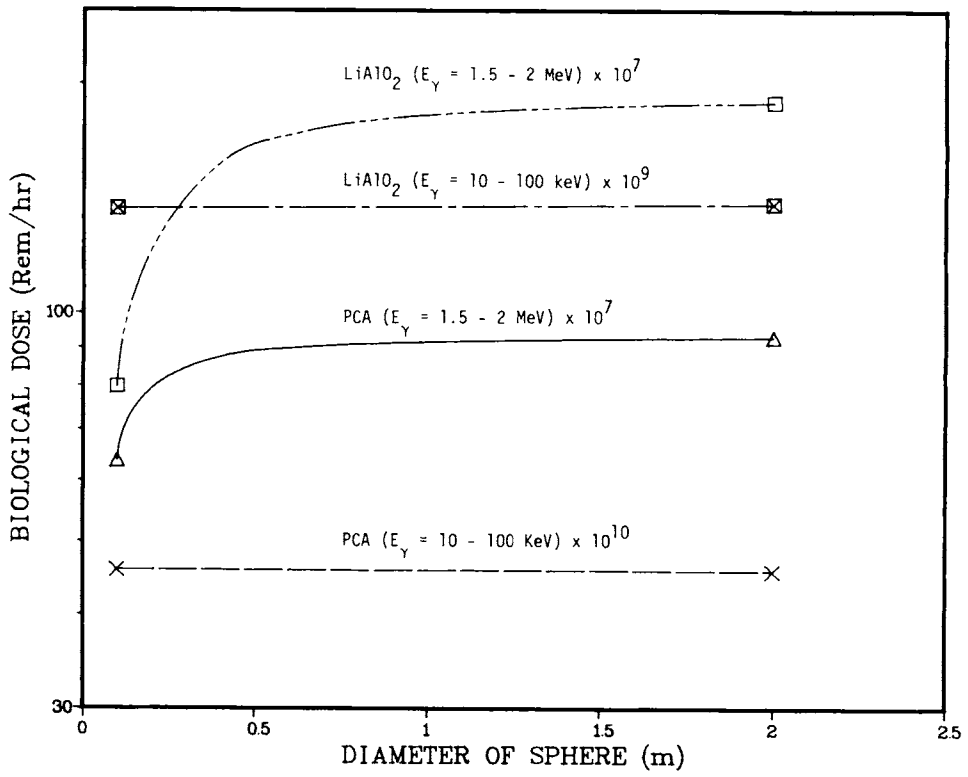

Figure 12-10. Effect of decay gamma source volume upon the surface contact biological dose.

unlikely that the shape effect would override the saturation dose level for such a large-volume piece. This observation is, again, based on the strong self-shielding effect which is not overly sensivive to the shapes of attenuating media. The material volume for the dose calculation relevant to material recycling analysis hereafter is, therefore, assumed to be a 1 m - diameter sphere.

Table 12-11 classifies all reactor components according to the HLW, MLW and LLW categorizations defined earlier. The data base for Table 12-11 is obtained from Table 12-2. It is noticed that most of the first wall/blanket components belong to either HLW or MLW at times of interest for recycling. A majority of the shield components can be categorized to LLW within 30 yr - 50 yr after shutdown and many of components external to the bulk shield appear to be recyclable at shutdown or in 1 yr at most. The only exception for such short-time recycling among those outside the shield is the inboard section of the TF-magnet, in particular, the high-field superconductors of Nb_3Sn. This is simply because of the relatively thin inboard bulk shield. Because

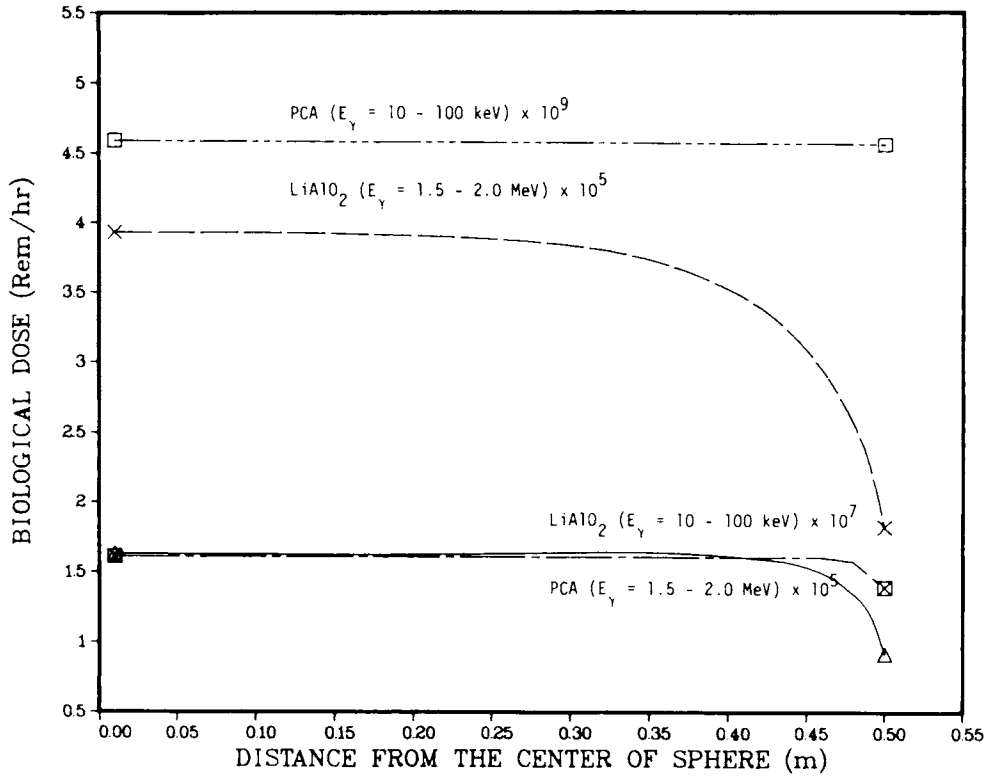

Figure 12-11. Spatial dependence of contact biological dose in a sphere with a uniform source distribution.

of the fact that the reactor power is highly sensitive to the distance between the plasma center and the maximum field point in the inboard section of the magnets, the determination of the shield thickness as well as its composition can not be driven merely by activation considerations. It should be noted, however, that the volume of the high-field inboard magnet section is about 38 m^3 (excluding liquid helium) which is only $\sim$ 5% of the total TF-magnet volume. Consequently, from the material recycling consideration, the outboard section of the TF-magnets is of much more importance because of their large volume. It is remarkable that all activation levels of the outboard shield components where the largest shield volume is present ($\sim$ 93% of 1500 m^3), decrease below the LLW limit within 20 yr at most. This was brought about by the shield optimization described in Sec. 11.2.2.

Table 12-12 summarizes the contact decay gamma doses converted from the decay gamma source strengths based on the conversion method described earlier. The decay source strength is taken from an average value in each component. It is noticed that most of the light non-structural materials such as water-

Table 12-11. Material Recyclability Classification Based on Component Radioactivity Concentrations kCi/m^3.

```
----- H : HIGH   LEVEL WASTE : > 1.0E+01          KCI/M**3 -----
----- M : MEDIUM LEVEL WASTE :   1.0E-04 - 1.0E+01 KCI/M**3 -----
----- L : LOW    LEVEL WASTE : < 1.0E-04          KCI/M**3 -----
```

TIME AFTER REACTOR SHUTDOWN

REACTOR COMPONENT		0	1YR	5YR	10YR	20YR	30YR	50YR	100YR	500YR	1000YR
1ST WALL	PCA --	H	H	H	H	H	H	H	H	H	M
	H2O --	H	L								
MULTIPLR	ZR5PB3 --	H	H	M	M	M	M	M	M	M	M
2ND WALL	PCA --	H	H	H	H	H	H	H	H	M	M
	H2O --	H	L								
IBLANKET	PCA --	H	H	H	H	H	H	M	M	M	M
	LIALO2 --	H	M	M	M	M	M	M	M	M	M
	H2O --	H	L								
OBLANKET	PCA --	H	H	H	H	H	H	M	M	M	M
	LIALO2 --	H	M	M	M	M	M	M	M	M	M
	H2O --	H	L								
REFLECTR	PCA --	H	H	H	H	H	H	H	M	M	M
	GRAPHITE--	L									
	H2O --	H	L								
IBLK-JKT	PCA --	H	H	H	H	H	M	M	M	M	M
OBLK-JKT	PCA --	H	H	H	H	H	H	H	M	M	M
HEADER	PCA --	H	H	H	H	H	H	H	M	M	M
	H2O --	M	L								
ISLD-JK1	FE1422 --	H	H	H	H	M	M	M	M	M	M
OSLD-JKT	FE1422 --	H	H	H	H	M	M	M	M	M	M
ISHIELD1	FE1422 --	H	H	M	M	M	M	M	L		
	TUNGSTEN--	H	M	M	M	M	L				
	H2O --	M	L								
ISHIELD2	FE1422 --	M	M	M	M	M	M	L			
	B4C --	M	L								
	H2O --	M	L								
OSHIELD1	TI6AL4V --	M	M	M	L						
	TIH2 --	M	M	M	L						
	B4C --	M	L								
	H2O --	M	L								
OSHIELD2	FE1422 --	M	M	M	M	L					
	B4C --	M	L								
	H2O --	M	L								
OSHIELD3	FE1422 --	M	L								
ISLD-JK2	FE1422 --	M	M	M	M	M	L				
AIR	CO2 --	L									
IMAG-DWR	FE1422 --	M	M	M	M	M	L				
OMAG-DWR	FE1422 --	M	L								
IMAG-HET	304SS --	M	M	M	M	M	L				
OMAG-HET	304SS --	L									
IMAGNET1	COPPER --	M	M	M	M	L					
	304SS --	M	M	M	M	L					
	NB3SN --	M	M	M	M	M	M	L			
	G-10 --	L									
IMAGNET2	304SS --	M	L								
	COPPER --	M	L								
	NBTI --	M	L								
	G-10 --	L									
IMAG-HE2	304SS --	L									
OMAGNET1	304SS --	L									
	COPPER --	L									
	NB3SN --	L									
	G-10 --	L									
OMAGNET2	COPPER --	L									
	304SS --	L									
	NBTI --	L									
	G-10 --	L									
SUPT-CYL	G-10 --	L									
OH/EF	COPPER --	L									
	304SS --	L									
	NBTI --	L									
	G-10 --	L									
BLDGWALL	CONCRETE--	L									

Table 12-12. Contact Biological Dose of Reactor Components Dose (Rem/hr)

TIME AFTER REACTOR SHUTDOWN

REACTOR COMPONENT		0	1YR	5YR	10YR	20YR	30YR	50YR	100YR	500YR	1000YR
1ST WALL	FCA --	4.77E 07	3.96E 06	1.39E 06	6.86E 05	1.83E 05	4.86E 04	3.46E 03	3.77E 00	3.74E 00	3.68E 00
	H2O --	1.27E 07	0.0	0.0	0.0	0.0	0.0	0.0	0.0	0.0	0.0
MULTIPLR	Z85FB3 --	5.50E 06	2.42E 04	5.04E-03	4.44E-11	1.13E-35	2.29E-54	0.0	0.0	0.0	0.0
2ND WALL	FCA --	1.83E 07	1.46E 06	5.06E 05	2.52E 05	6.70E 04	1.78E 04	1.27E 03	2.00E 00	1.98E 00	1.95E 00
	H2O --	4.54E 06	0.0	0.0	0.0	0.0	0.0	0.0	0.0	0.0	0.0
IBLANKET	FCA --	5.29E 06	4.47E 05	1.49E 05	7.39E 04	1.97E 04	5.24E 03	3.72E 02	6.68E-01	6.63E-01	6.52E-01
	LIALO2 --	7.27E 06	2.86E 00	2.86E 00	2.86E 00	2.86E 00	2.86E 00	2.86E 00	2.86E 00	2.86E 00	2.86E 00
	H2O --	1.37E 06	0.0	0.0	0.0	0.0	0.0	0.0	0.0	0.0	0.0
OBLANKET	FCA --	3.34E 06	2.82E 05	9.35E 04	4.63E 04	1.23E 04	3.28E 03	2.34E 02	4.28E-01	4.25E-01	4.18E-01
	LIALO2 --	4.61E 06	1.77E 00	1.77E 00	1.77E 00	1.77E 00	1.77E 00	1.77E 00	1.77E 00	1.77E 00	1.77E 00
	H2O --	8.60E 05	0.0	0.0	0.0	0.0	0.0	0.0	0.0	0.0	0.0
REFLECTR	FCA --	5.01E 05	9.52E 03	2.78E 03	1.36E 03	3.62E 02	9.65E 01	6.97E 00	1.27E-01	1.26E-01	1.24E-01
	GRAPHITE--	0.0	0.0	0.0	0.0	0.0	0.0	0.0	0.0	0.0	0.0
	H2O --	2.65E 04	0.0	0.0	0.0	0.0	0.0	0.0	0.0	0.0	0.0
IBLK-JKT	FCA --	1.07E 06	7.15E 04	2.26E 04	1.12E 04	2.97E 03	7.92E 02	5.64E 01	2.11E-01	2.10E-01	2.06E-01
OBLK-JKT	FCA --	2.94E 05	3.89E 03	1.13E 03	5.55E 02	1.48E 02	3.94E 01	2.87E 00	8.36E-02	8.30E-02	8.16E-02
HEADER	FCA --	2.78E 05	2.56E 03	7.49E 02	3.67E 02	9.78E 01	2.61E 01	1.95E 00	9.63E-02	9.56E-02	9.39E-02
	H2O --	7.21E 03	0.0	0.0	0.0	0.0	0.0	0.0	0.0	0.0	0.0
ISLD-JK1	FE1422 --	2.01E 06	6.96E 04	4.10E 03	9.76E 02	2.51E 02	6.69E 01	4.75E 00	2.07E-14	6.74E-26	1.29E-54
OSLD-JKT	FE1422 --	4.44E 05	2.00E 03	1.15E 02	2.68E 01	6.88E 00	1.83E 00	1.30E-01	5.68E-16	1.85E-27	3.52E-56
ISHIELD1	FE1422 --	9.94E 03	4.38E 02	2.57E 01	6.03E 00	1.56E 00	4.17E-01	2.96E-02	1.29E-16	4.20E-28	8.00E-57
	TUNGSTEN--	1.11E 01	3.54E-01	2.55E-02	1.23E-02	3.44E-03	9.26E-04	7.73E-05	1.24E-05	1.23E-05	1.21E-05
	H2O --	9.61E 02	0.0	0.0	0.0	0.0	0.0	0.0	0.0	0.0	0.0
ISHIELD2	FE1422 --	1.00E 03	5.39E 01	3.15E 00	7.44E-01	1.91E-01	5.09E-02	3.62E-03	1.53E-17	5.13E-29	9.79E-58
	B4C --	0.0	0.0	0.0	0.0	0.0	0.0	0.0	0.0	0.0	0.0
	H2O --	1.18E 02	0.0	0.0	0.0	0.0	0.0	0.0	0.0	0.0	0.0
OSHIELD1	TI6AL4V --	2.67E 03	2.60E 01	3.85E-02	1.31E-02	3.50E-03	1.01E-03	1.71E-04	1.07E-04	1.07E-04	1.07E-04
	TIH2 --	2.04E 03	2.59E 01	1.75E-04	6.02E-11	7.14E-24	8.47E-37	1.19E-62	0.0	0.0	0.0
	B4C --	0.0	0.0	0.0	0.0	0.0	0.0	0.0	0.0	0.0	0.0
	H2O --	5.06E 02	0.0	0.0	0.0	0.0	0.0	0.0	0.0	0.0	0.0
OSHIELD2	FE1422 --	5.65E 00	2.80E-01	1.56E-02	3.48E-03	8.90E-04	2.37E-04	1.68E-05	7.35E-20	2.39E-31	4.56E-60
	B4C --	0.0	0.0	0.0	0.0	0.0	0.0	0.0	0.0	0.0	0.0
	H2O --	6.54E-01	0.0	0.0	0.0	0.0	0.0	0.0	0.0	0.0	0.0
OSHIELD3	FE1422 --	1.06E-01	9.51E-04	5.25E-05	1.15E-05	2.94E-06	7.82E-07	5.55E-08	2.42E-22	7.28E-34	1.50E-62
ISLD-JK2	FE1422 --	5.11E 01	2.45E 00	1.39E-01	3.17E-02	8.13E-03	2.17E-03	1.54E-04	6.72E-19	2.13E-30	4.16E-59
AIR	CO2 --	1.20E-07	0.0	0.0	0.0	0.0	0.0	0.0	0.0	0.0	0.0
IMAG-DWR	FE1422 --	5.52E 01	1.59E 00	9.04E-02	2.05E-02	5.26E-03	1.40E-03	9.96E-05	4.35E-19	1.41E-30	2.69E-59
OMAG-DWR	FE1422 --	4.56E-02	3.18E-05	1.75E-06	3.85E-07	9.84E-08	2.62E-08	1.86E-09	8.12E-24	2.64E-35	5.04E-64
IMAG-HET	304SS --	1.04E 01	3.72E-01	9.05E-02	4.31E-02	1.15E-02	3.05E-03	2.17E-04	4.49E-08	4.46E-08	4.38E-08
OMAG-HET	304SS --	4.24E-03	1.23E-05	4.20E-06	2.09E-06	5.55E-07	1.48E-07	1.05E-08	1.06E-12	1.05E-12	1.03E-12
IMAGNET1	COPPER --	5.01E-02	4.39E-02	2.59E-02	1.34E-02	3.56E-03	9.48E-04	6.73E-05	2.94E-19	9.53E-31	1.82E-59
	304SS --	1.99E 00	3.12E-02	7.88E-03	3.78E-03	1.00E-03	2.68E-04	1.90E-05	3.75E-09	3.73E-09	3.66E-09
	NB3SN --	1.88E-01	1.88E-03	1.83E-03	1.83E-03	1.88E-03	1.88E-03	1.87E-03	1.86E-03	1.85E-03	1.81E-03
	G-10 --	3.14E-02	0.0	0.0	0.0	0.0	0.0	0.0	0.0	0.0	0.0
IMAGNET2	304SS --	1.91E-02	5.20E-05	1.53E-05	7.47E-06	1.99E-06	5.29E-07	3.76E-08	5.69E-12	5.65E-12	5.56E-12
	COPPER --	7.28E-05	6.33E-05	3.76E-05	1.94E-05	5.17E-06	1.33E-06	9.78E-08	4.27E-22	1.39E-33	2.65E-62
	NBTI --	1.62E-04	9.62E-06	9.61E-06	9.61E-06	9.61E-06	9.61E-06	9.60E-06	9.52E-06	9.45E-06	9.28E-06
	G-10 --	4.59E-05	0.0	0.0	0.0	0.0	0.0	0.0	0.0	0.0	0.0
IMAG-HE2	304SS --	1.05E-04	9.53E-08	3.82E-08	1.93E-08	5.13E-09	1.37E-09	9.70E-11	7.39E-15	7.34E-15	7.21E-15
OMAGNET1	304SS --	8.76E-04	1.19E-06	4.37E-07	2.19E-07	5.82E-08	1.55E-08	1.10E-09	9.67E-14	9.60E-14	9.44E-14
	COPPER --	1.25E-06	1.09E-06	6.45E-07	3.33E-07	8.87E-08	2.36E-08	1.63E-09	7.33E-24	2.38E-35	4.54E-64
	NB3SN --	5.07E-06	8.95E-07	8.95E-07	8.95E-07	8.94E-07	8.94E-07	8.93E-07	8.88E-07	8.79E-07	8.64E-07
	G-10 --	6.85E-07	0.0	0.0	0.0	0.0	0.0	0.0	0.0	0.0	0.0
OMAGNET2	COPPER --	3.56E-09	3.12E-09	1.84E-09	9.43E-10	2.52E-10	6.73E-11	4.78E-12	2.09E-26	6.72E-38	1.29E-66
	304SS --	7.84E-06	4.83E-09	2.01E-09	1.01E-09	2.70E-10	7.20E-11	5.11E-12	3.41E-16	3.39E-16	3.33E-16
	NBTI --	1.07E-08	3.72E-09	3.72E-09	3.72E-09	3.71E-09	3.71E-09	3.71E-09	3.68E-09	3.65E-09	3.59E-09
	G-10 --	2.03E-09	0.0	0.0	0.0	0.0	0.0	0.0	0.0	0.0	0.0
SUPT-CYL	G-10 --	0.0	0.0	0.0	0.0	0.0	0.0	0.0	0.0	0.0	0.0
OH/EF	COPPER --	3.10E-12	2.71E-12	1.60E-12	8.25E-13	2.20E-13	5.86E-14	4.16E-15	1.82E-29	5.90E-41	0.0
	304SS --	2.10E-08	6.21E-12	2.85E-12	1.45E-12	3.87E-13	1.03E-13	7.33E-15	4.34E-19	4.31E-19	4.24E-19
	NBTI --	1.25E-11	6.17E-12	6.17E-12	6.17E-12	6.17E-12	6.17E-12	6.16E-12	6.11E-12	6.07E-12	5.96E-12
	G-10 --	1.83E-12	0.0	0.0	0.0	0.0	0.0	0.0	0.0	0.0	0.0
BLDGWALL	CONCRETE--	6.81E-04	1.83E-07	1.74E-09	2.53E-11	1.58E-13	1.53E-13	1.53E-13	1.52E-13	1.52E-13	1.52E-13

coolant, graphite reflector, boron-carbide shield and G-10 insulation show a a rapid dose decrease shortly after shutdown. This reflects the fact that these materials contain mostly β-decay products and/or substantially short-lived γ-emission decay products. The reactor building wall consisting of ordinary concrete with 5 v/o Fe-reinforcement has an average dose rate of 0.7 mrem/hr at shutdown and exhibits a significant decay in a year after shutdown. Again, it is seen that the major high-level long-term activation is confined mostly to the first wall/blanket region.

Using the results of this dose analysis, a material recycling-potential classification based on the 2.5 mrem/hr limit criterion is shown in Table 12-13. Interestingly enough, the result based on this criterion is very consistent with that in Table 12-11 derived from the LLW limit criterion. Some differences between the two classifications exist, of course, because of the differences in the activation characteristics such as decay mode, decay energy spectrum, self-shielding effect, etc. Note that the analysis shown in Tables 12-11 and 12-13 does not include the β-decay dose, leading inevitably to an underestimate of the contact biological dose. Although it is very likely that most of the beta-particle emission yields only a skin dose for human bodies, and hence, shielding against the β-radiation is of less importance from the material handling standpoint, a complete material recycling and radwaste management analysis should include the β-dose effect. A large difference in the classifications found in the Zr_5Pb_3 waste, which is dominated by the β-decay products, is obviously brought about by the lack of such β-component in the biological dose evaluations.

In the present analysis, the two results of Tables 12-11 and 12-13 are combined for the recycling-potential classifications, taking whichever the more restrictive. According to this classification, all major reactor components (excluding the water-coolant and the graphite reflector) in the first wall/blanket (total volume of $\sim$ 300 m^3) are non-recyclable without remote chemical/isotopic material treatments. Of this 300 m^3, about 180 m^3 is occupied by $LiAlO_2$. There are strong incentives to recycle $LiAlO_2$ or its lithium content. The biological dose rate in $LiAlO_2$ decays to $\sim$ 2 - 3 rem/hr within a few months after shutdown and remains nearly constant for a very long time. Therefore, all processes performed in recycling $LiAlO_2$ will have to

Table 12-13. Material Recyclability Classification Based on Component Surface Biological Doses[a,b]

REACTOR COMPONENT			TIME AFTER REACTOR SHUTDOWN 0	1YR	5YR	10YR	20YR	30YR	50YR	100YR	500YR	1000YR
1ST WALL	PCA	--	N	N	N	N	N	N	N	N	N	N
	H2O	--	N	R								
MULTIPLR	ZR5PB3	--	N	N	N	R						
2ND WALL	PCA	--	N	N	N	N	N	N	N	N	N	N
	H2O	--	N	R								
IBLANKET	PCA	--	N	N	N	N	N	N	N	N	N	N
	LIALO2	--	N	N	N	N	N	N	N	N	N	N
	H2O	--	N	R								
OBLANKET	PCA	--	N	N	N	N	N	N	N	N	N	N
	LIALO2	--	N	N	N	N	N	N	N	N	N	N
	H2O	--	N	R								
REFLECTR	PCA	--	N	N	N	N	N	N	N	N	N	N
	GRAPHITE	--	R									
	H2O	--	N	R								
IBLK-JKT	PCA	--	N	N	N	N	N	N	N	N	N	N
OBLK-JKT	PCA	--	N	N	N	N	N	N	N	N	N	N
HEADER	PCA	--	N	N	N	N	N	N	N	N	N	N
	H2O	--	N	R								
ISLD-JKT	FE1422	--	N	N	N	N	N	N	N	R		
OSLD-JKT	FE1422	--	N	N	N	N	N	N	N	R		
ISHIELD1	FE1422	--	N	N	N	N	N	N	N	R		
	TUNGSTEN	--	N	N	N	N	N	R				
	H2O	--	N	R								
ISHIELD2	FE1422	--	N	N	N	N	N	N	N	R		
	B4C	--	R									
	H2O	--	N	R								
OSHIELD1	TI6AL4V	--	N	N	N	N	N	R				
	TIH2	--	N	N	R							
	B4C	--	R									
	H2O	--	N	R								
OSHIELD2	FE1422	--	N	N	N	N	R					
	B4C	--	R									
	H2O	--	N	R								
OSHIELD3	FE1422	--	N	R								
ISLD-JK2	FE1422	--	N	N	N	N	N	R				
AIR	CO2	--	R									
IMAG-DNR	FE1422	--	N	N	N	N	N	R				
OMAG-DNR	FE1422	--	N	R								
IMAG-HET	304SS	--	N	N	N	N	N	N	R			
OMAG-HET	304SS	--	N	R								
IMAGNET1	COPPER	--	N	N	N	N	N	R				
	304SS	--	N	N	N	N	R					
	NB3SN	--	N	R								
	G-10	--	N	R								
IMAGNET2	304SS	--	N	R								
	COPPER	--	R									
	NBTI	--	R									
	G-10	--	R									
IMAG-HE2	304SS	--	R									
OMAGNET1	304SS	--	R									
	COPPER	--	R									
	NB3SN	--	R									
	G-10	--	R									
OMAGNET2	COPPER	--	R									
	304SS	--	R									
	NBTI	--	R									
	G-10	--	R									
SUPT-CYL	G-10	--	R									
OH/EF	COPPER	--	R									
	304SS	--	R									
	NBTI	--	R									
	G-10	--	R									
BLDGWALL	CONCRETE	--	R									

[a] R ≡ The contact biological dose rate at the surface of 1 m-diameter sphere is below 2.5 mrem/hr; the potential for recycling is high.

[b] N ≡ The biological dose rate is greater than 2.5 mrem/hr; the potential for recycling is low.

adapt the known radiation protection measures. Notice that the long-term radioactivity in $LiAlO_2$ comes only from aluminum-26. All bulk shield components and components external to the shield can be recycled within 30 yr after the component replacement or reactor decommissioning. Many of the components would be recyclable even to the general public. Exceptions for such short-time recycling include the Fel422 structure in the inboard bulk shield, taking $\sim$ 100 yr, the inboard magnet helium vessel made of 304 SS and the Nb_3Sn superconductors both taking $\sim$ 50 yr before decaying to 2.5 mrem/hr. Note that the total volume of components that can be recycled within 30 yr is $\sim$ 2400 m^3 (excluding the water-coolant, the reactor building and the penetration subsystem components) and the volume of the three non-recyclable components mentioned above (taking more than 30 yr for recycling) is only $\sim$ 29 m^3.

As shown in Table 12-14, all of the limiter components and vacuum pumping shields can be recycled in 30 yr at most after they are removed from the reactor. A high-level long-term activation is found only in the PCA grill components of the rf-wave launcher, particularly in those components near the first wall. While these PCA structure materials will take 1000 yr or more before they decay to 2.5 mrem/hr their volume is only $\sim$ 2.7 m^3 ($\sim$ 21 MT in weight). The Fel422 shield around the rf-waveguides in between the blanket and shield, i.e., in the plenum region is also highly activated and needs $\sim$ 200 yr to decay to 2.5 mrem/hr. The most outstanding feature regarding the major penetration system activation in STARFIRE can be seen in a significantly short-time requirement for the vacuum pumping shield material recycling. The highest activation induced in the Fel422-base shield around the pump chamber will take only $\sim$ 20 yr prior to its recyclable classification. Excluding the water coolant in the vacuum system shield, a radwaste of $\sim$ 1000 m^3 ($\sim$ 6500 MT) has a potential for recycling within 20 yr after reactor decommissioning.

In summary, the STARFIRE reactor yields $\sim$ 1400 m^3 ($\sim$ 7300 MT) of low recycling-potential (> 2.5 mrem/hr after 30 yr) and $\sim$ 4500 m^3 ($\sim$ 25000 MT) of recyclable materials at the end of its 30 yr plant life, based on the blanket sector replacement interval of 6 yr. The water coolant and the reactor building are eliminated from this evaluation. Again, it should be noted that more than 60% of the 1400 m^3 low recycling-potential inventory consists

Table 12-14. Time Requirement[a] for Material Recycling of Limiter, rf and Vacuum Systems

Component	Volume (m^3)	Weight (MT)	Time (yr)
(A) Limiter System[b]			
LIMA/Ta-5W	0.6	10	20 (30)[c]
LIMB/Ta-5W	1.0	16	20 (30)
LIMC/Ta-5W	0.3	5	10 (20)
(B) rf System[d]			
RFA/PCA	0.1	1.1	> 1000
RFB/PCA	2.1	16.3	> 1000
RFC/PCA	0.5	3.8	1000
RFD/PCA	7.3	57.4	30
Shield 1/Fe1422	2.3	18.0	200
Shield 2/Fe1422	3.1	24.0	0
(C) Vacuum System[e]			
Duct Shield 1/Ti6Al4V	6.6	30	10
TiH_2	86.0	334	10
B_4C	19.9	50	1
Duct Shield 2/Fe1422	134.2	1065	5
B_4C	28.8	72	0
Pump Chamber Shield/Fe1422	244.1	1938	20
B_4C	52.3	131	0
Pump Shield/Fe1422	344.1	2732	20
B_4C	73.7	184	0

(a) Based on the limit criteria of 10^{-4} kCi/m^3 and 2.5 mrem/hr.

(b) See Section 11.3.2

(c) V-20Ti structure case.

(d) See Section 11.3.3

(e) See Section 11.3.1

of the medium level waste (order of $\sim$ 1 Ci/m^3) of $LiAlO_2$ containing only a single activation product of ^{26}Al. Approximately one third of the rest of the radwaste volume ($\sim$ 40% in weight) is the Zr_5Pb_3 neutron multiplier having medium activation level of 100 Ci/m^3 beyond 50 yr after its decommissioning. The ultimate non-recycling high level radwaste discharged from the STARFIRE reactor over the 30 yr operation is $\sim$ 290 m^3 ($\sim$ 2300 MT) contributed solely by the PCA steel structures.

12.4 DECAY AFTERHEAT

So far the analysis has been focused more or less on the long-term reactor activation. Another important aspect of the reactor activation involves the radioactive decay shortly after reactor shutdown. The short-term activation has two major design impacts upon:

1. post-shutdown decay heat removal under normal and off-normal conditions; and
2. reactor accessibility after a short reactor cool-down period.

Although the STARFIRE plans call for fully remote maintenance, a shielding design effort has been devoted to realization of a reactor room dose of $\sim$ 1 mrem/hr within 24 hr after shutdown. Such a dose level allows personnel access into the reactor building with all shielding in place. A degree of confidence in improving the plant availability factor by allowing some maintenance tasks to be carried out in contact or semi-remote mode provides a good incentive for enhancing reactor accessibility.

As the reactor accessibility has been studied in detail in connection to the shielding optimization (Sec. 11.2.2), the analysis in this section is centered on the decay afterheat problem. Since the decay heat in each reactor component must be designed for, each component has its own importance. In addition, long-term radwaste storage requires knowledge of the magnitude of decay heat for each component. However, the analysis in this section is focused on the decay-heat evaluation for key components in the first wall/blanket where the magnitude of the decay heat is generally the highest.

Figure 12-12 shows the variation of the decay heating rate with time for the reference STARFIRE blanket design. The reactor is assumed to have been in operation for five full year at a neutron wall load of 3.6 MW/m^2 (18 $MW\text{-}yr/m^2$ integral wall loading). The heating rates shown are those averaged over the individual component volumes from both β- and γ-decays with the γ-ray transport taken into account. The Zr_5Pb_3 multiplier generates higher heating rate than the PCA first wall, maintaining a heating rate of ∿ 1 MW/m^3 over 24 hr after shutdown. This reflects the decay of ^{89}Zr (half-life of 78 hr) emitting a single β-ray of 0.90 MeV, a major γ-ray of 0.91 MeV (intensity 99%) and four minor-intensity γ-rays of 1.62 MeV, 1.66 MeV, 1.71 MeV and 1.74 MeV. Because of the relatively large atomic numbers of Zr and Pb most of the gamma rays as well as the β-particles are absorbed in the multiplier region itself. In the PCA first-wall and second-wall, the most dominant isotope contributing to the heating during the first day after shutdown, is ^{56}Mn (2.6 hr) emitting β-rays of 2.84 MeV (47%), 1.03 MeV (34%), 0.72 MeV (18%) and 0.3 MeV (∿ 1%) along with major γ-rays of 0.85 MeV (99%) and 2.5 MeV (∿ 1%). The substantial decrease of the decay heating in the wall within a few hours after shutdown reflects the rapid decay of ^{56}Mn. As the decay β-spectrum of ^{56}Mn is relatively hard, the β-heating contribution to the total is almost equilivant to or slightly higher than the γ-contribution up to ∿ 6 hr after shutdown.

The $LiAlO_2$ breeder decay heating comes primarily from: (1) ^{24}Na (15 hr) with emission of 1.39 MeV β-ray and two major γ-rays of 1.37 MeV (100%) and 2.75 MeV (100%); (2) ^{27}Mg (9.5 m) decay accompanied by two β-rays of 1.75 MeV (58%) and 1.59 MeV (42%) and by two major gamma rays of 0.84 MeV (intensity 73%) and 1.01 MeV (relative intensity 40%*); and (3) ^{28}Al (2.2 m) which decays with 2.87 MeV β− (100%) and 1.78 MeV γ-rays. The sizable heating decrease observed between shutdown and 1 min after shutdown in $LiAlO_2$ is due mainly to the ^{16}N (7.1 s) decay which is accompanied by the 10.4 MeV (26%) and 4.3 MeV (68%) β-rays as well as the two major γ-rays of 6.1 MeV (68.8%) and 7.1 MeV (relative intensity 6.9%). In the $LiAlO_2$ breeder zone, therefore, one can see a sizable β-heat contribution by ^{16}N up to ∿ 1 min after shutdown. After the decay of ^{16}N, the breeder heating is contributed mostly by the decay-γ interactions with this material.

*Relative to the major γ-intensity.

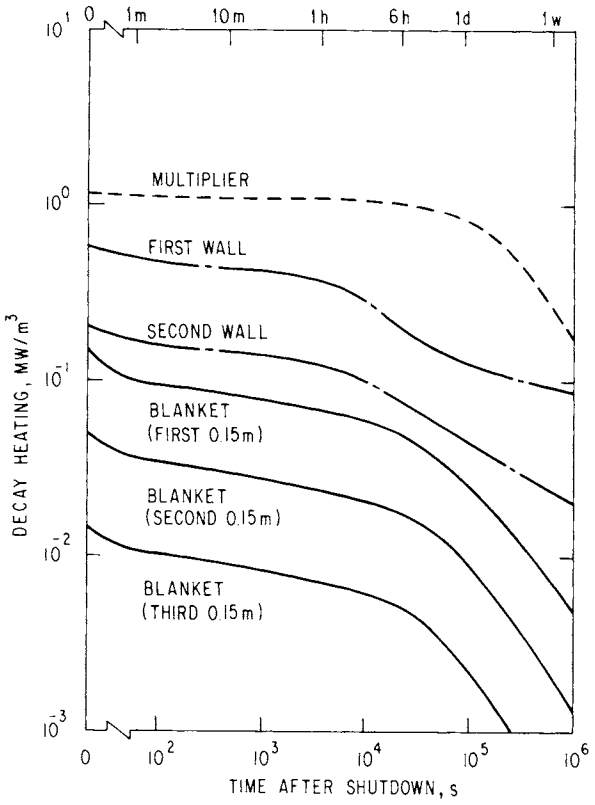

Figure 12-12. Time dependence of decay heating in the Zr_5Pb_3 multiplier system.

During the course of the STARFIRE blanket design study, a blanket concept based on a neutron multiplication by beryllium was investigated. Figure 12-13 shows the variation of the decay heat with time in such a beryllium-multiplier blanket design. The Be zone heating shows a vivid contrast to the Zr_5Pb_3 case indicated in Fig. 12-12. The difference is attributable solely to the fact that the Be multiplier does not produce any significant activation except for an extremely low concentration of ^{10}Be (1.6×10^6 yr, 0.55 MeV-β/no-γ) induced by the $^9Be(n,\gamma)$ reaction and for the very short-lived pure β-emitting isotope of ^6He(0.8s). The associated β-energy of ^6He is $\sim$ 3.5 MeV. Because of such a short-term activation, the Be decay heat decreases to a trivial level in a few seconds after shutdown. Beyond that time period, the Be multiplier decay-heating is determined by γ-rays flowing in from the neighboring regions. Since the PCA walls surrounding the multiplier have large γ-ray absorption cross sections, the resultant heating profile exhibits a deep-well shape in the multiplier zone within a minute after shutdown.

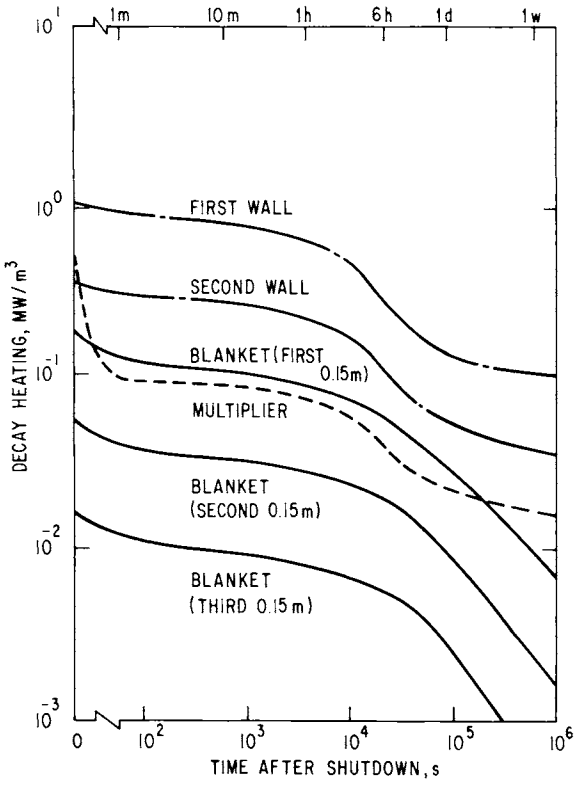

Figure 12-13. Time dependence of decay heating in the beryllium multiplier system.

Figure 12-14 shows the total decay-heat load in the system as a function of the post-shutdown time. Also shown in the figure is the Be-multiplier case. The total decay-heat in the Zr_5Pb_3 system is ∿ 88 MW at shutdown which is ∿ 2.2% of the total reactor thermal power. This decay-heat is reduced to ∿ 40 MW within 24 hr, followed by a steep attenuation beyond that time period, reflecting the ^{89}Zr decay. Many of the earlier work relevant to decay-heat analysis for fusion reactors have shown a maximum decay heat load of about 1% of the operational reactor power. In the STARFIRE reference design, approximately half of the decay-power comes solely from the Zr_5Pb_3 decay. The 2.2% decay power fraction is still significantly lower than a typical PWR core[22] case in which the decay power reaches several percents of the total power. The impact of such a high decay power associated with the Zr_5Pb_3 multiplier design has been carefully addressed in the first wall/blanket design (see Chapter 10). Figure 12-15 and Table 12-15 summarize the results of the decay heat analysis on a longer time-scale. These results provide a useful information base for designing the heat removal systems supplied during maintenance operations and in the waste storage facility.

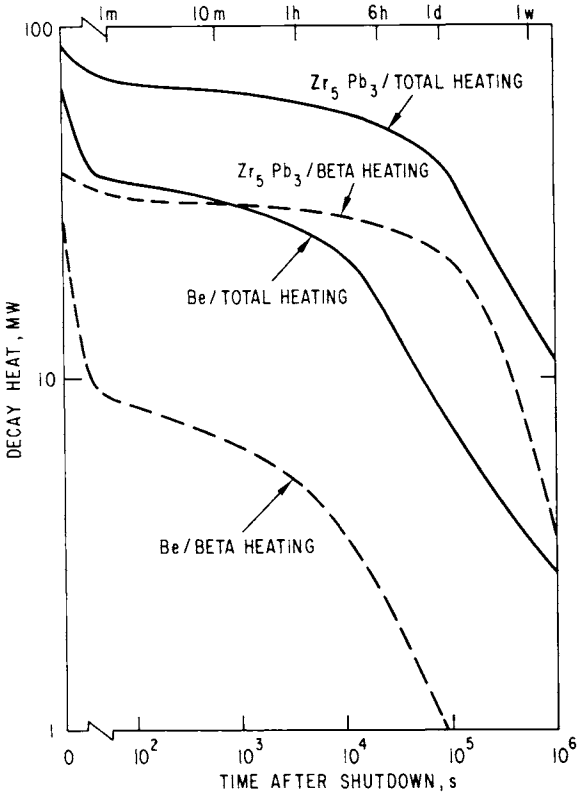

Figure 12-14. A comparison of the system decay heat for the Zr_5Pb_3 and Be neutron multiplier system designs.

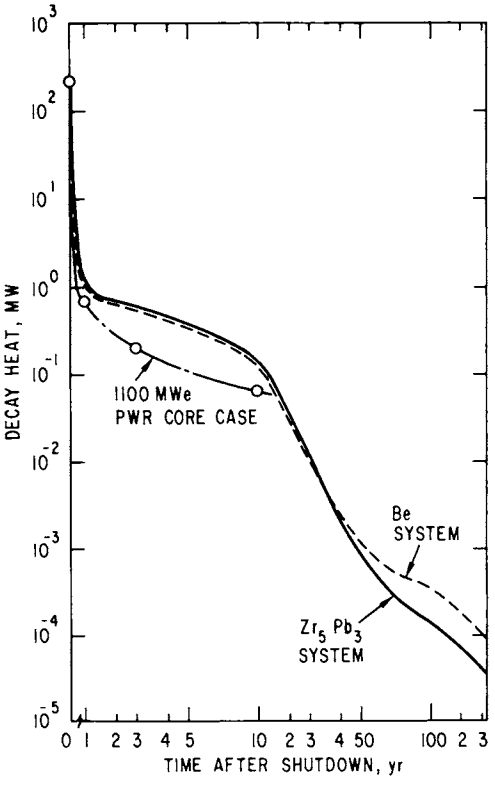

Figure 12-15. Time dependence of the system decay heat.

Table 12-15. Decay Afterheating Rate of Reactor Components

(MW/m^3)

TIME AFTER REACTOR SHUTDOWN

REACTOR COMPONENT		0	1YR	5YR	10YR	20YR	30YR	50YR	100YR	500YR	1000YR
1ST WALL	FCA --	8.11E-01	7.26E-02	2.42E-02	1.04E-02	2.42E-03	6.29E-04	5.27E-05	2.04E-06	9.60E-07	5.56E-07
	H2O --	2.50E-01	0.0	0.0	0.0	0.0	0.0	0.0	0.0	0.0	0.0
MULTIPLR	ZR5FB3 --	4.64E-01	9.37E-04	1.80E-06	1.41E-06	1.00E-06	7.62E-07	4.62E-07	3.55E-09	2.61E-09	2.60E-09
2ND WALL	FCA --	3.15E-01	2.66E-02	8.80E-03	3.80E-03	8.80E-04	2.31E-04	1.93E-05	8.62E-07	4.70E-07	2.90E-07
	H2O --	8.90E-02	0.0	0.0	0.0	0.0	0.0	0.0	0.0	0.0	0.0
IBLANKET	FCA --	9.01E-02	7.96E-03	2.56E-03	1.11E-03	2.59E-04	6.69E-05	4.99E-06	1.52E-07	1.17E-07	8.27E-08
	LIALO2 --	1.11E-01	1.86E-08	1.86E-08	1.86E-08	1.86E-08	1.86E-08	1.86E-08	1.86E-08	1.86E-08	1.86E-08
	H2O --	2.71E-02	0.0	0.0	0.0	0.0	0.0	0.0	0.0	0.0	0.0
OBLANKET	FCA --	5.71E-02	5.01E-03	1.60E-03	6.93E-04	1.63E-04	4.19E-05	3.13E-06	9.60E-08	7.39E-08	5.24E-08
	LIALO2 --	7.01E-02	1.15E-08	1.15E-08	1.15E-08	1.15E-08	1.15E-08	1.15E-08	1.15E-08	1.15E-08	1.15E-08
	H2O --	1.70E-02	0.0	0.0	0.0	0.0	0.0	0.0	0.0	0.0	0.0
REFLECTR	FCA --	1.01E-02	2.20E-04	6.74E-05	2.62E-05	5.97E-06	2.05E-06	7.77E-07	1.20E-07	4.00E-08	1.70E-08
	GRAPHITE--	2.59E-12	2.58E-12	2.58E-12	2.58E-12	2.58E-12	2.58E-12	2.57E-12	2.49E-12	2.48E-12	2.29E-12
	H2O --	5.24E-04	0.0	0.0	0.0	0.0	0.0	0.0	0.0	0.0	0.0
IBLK-JKT	FCA --	1.92E-02	1.25E-03	3.87E-04	1.67E-04	3.92E-05	1.01E-05	7.06E-07	4.63E-08	3.76E-08	2.70E-08
OBLK-JKT	FCA --	6.04E-03	1.09E-04	3.42E-05	1.27E-05	2.82E-06	1.10E-06	5.34E-07	8.54E-08	2.70E-08	1.12E-08
HEADER	FCA --	5.80E-03	9.57E-05	3.11E-05	1.09E-05	2.36E-06	1.09E-06	6.29E-07	1.03E-07	3.25E-08	1.23E-08
	H2O --	1.43E-04	0.0	0.0	0.0	0.0	0.0	0.0	0.0	0.0	0.0
ISLD-JK1	FE1422 --	4.00E-02	1.22E-03	1.39E-04	3.46E-05	4.72E-06	9.57E-07	6.38E-08	7.66E-10	4.21E-10	3.14E-10
OSLD-JKT	FE1422 --	9.25E-03	4.96E-05	9.01E-06	2.33E-06	2.46E-07	5.35E-08	1.97E-08	3.16E-09	1.10E-09	5.11E-10
ISHIELD1	FE1422 --	2.00E-04	7.63E-06	8.70E-07	2.13E-07	2.94E-08	5.96E-09	3.95E-10	4.25E-12	2.42E-12	1.84E-12
	TUNGSTEN--	2.21E-04	1.83E-06	9.80E-10	4.71E-10	1.25E-10	3.61E-11	6.47E-12	3.60E-12	3.22E-12	2.43E-12
	H2O --	1.90E-05	0.0	0.0	0.0	0.0	0.0	0.0	0.0	0.0	0.0
ISHIELD2	FE1422 --	2.00E-05	9.31E-07	1.04E-07	2.50E-08	3.56E-09	7.26E-10	4.79E-11	4.48E-13	2.50E-13	1.93E-13
	B4C --	3.35E-06	8.60E-14	8.60E-14	8.60E-14	8.60E-14	8.60E-14	8.60E-14	8.60E-14	8.60E-14	8.60E-14
	H2O --	2.33E-06	0.0	0.0	0.0	0.0	0.0	0.0	0.0	0.0	0.0
OSHIELD1	TI6AL4V --	2.52E-05	2.15E-07	2.80E-10	1.11E-10	2.89E-11	8.86E-12	2.17E-12	1.16E-12	1.00E-12	1.04E-12
	TIH2 --	1.57E-05	1.98E-07	2.32E-11	1.04E-14	2.34E-21	5.25E-28	2.65E-41	0.0	0.0	0.0
	B4C --	1.53E-05	4.34E-13	4.34E-13	4.34E-13	4.34E-13	4.34E-13	4.34E-13	4.34E-13	4.34E-13	4.34E-13
	H2O --	1.00E-05	0.0	0.0	0.0	0.0	0.0	0.0	0.0	0.0	0.0
OSHIELD2	FE1422 --	1.14E-07	4.60E-09	4.40E-10	1.07E-10	1.56E-11	3.32E-12	2.27E-13	2.71E-15	1.30E-15	9.77E-16
	B4C --	2.07E-08	6.55E-16	6.55E-16	6.55E-16	6.55E-16	6.55E-16	6.55E-16	6.55E-16	6.55E-16	6.53E-16
	H2O --	1.29E-08	0.0	0.0	0.0	0.0	0.0	0.0	0.0	0.0	0.0
OSHIELD3	FE1422 --	2.19E-09	1.58E-11	1.58E-12	3.76E-13	5.34E-14	1.13E-14	9.56E-16	5.19E-17	2.43E-17	1.61E-17
ISLD-JK2	FE1422 --	1.03E-06	4.14E-08	4.39E-09	1.07E-09	1.49E-10	3.03E-11	2.00E-12	2.77E-14	1.40E-14	1.03E-14
AIR	CO2 --	2.97E-15	2.17E-24	2.17E-24	2.17E-24	2.17E-24	2.17E-24	2.16E-24	2.10E-24	2.08E-24	1.93E-24
IMAG-DNR	FE1422 --	1.13E-06	2.70E-08	2.88E-09	7.00E-10	9.73E-11	2.00E-11	1.41E-12	3.04E-14	1.47E-14	1.00E-14
OMAG-DNR	FE1422 --	9.50E-10	6.25E-13	8.66E-14	2.16E-14	2.57E-15	5.70E-16	1.61E-16	2.55E-17	9.92E-18	5.42E-18
IMAG-HET	304SS --	1.99E-07	6.89E-09	1.81E-09	7.16E-10	1.57E-10	4.04E-11	3.97E-12	3.52E-13	2.03E-13	1.31E-13
OMAG-HET	304SS --	8.76E-11	3.06E-13	1.04E-13	4.04E-14	8.97E-15	2.97E-15	1.06E-15	2.33E-16	1.27E-16	7.67E-17
IMAGNET1	COPPER --	1.21E-07	6.18E-10	3.66E-10	1.91E-10	5.34E-11	1.66E-11	3.85E-12	4.41E-13	9.77E-14	2.25E-15
	304SS --	4.00E-08	6.70E-10	1.88E-10	7.13E-11	1.51E-11	4.39E-12	1.05E-12	1.64E-13	7.01E-14	3.71E-14
	NB3SN --	5.18E-09	3.77E-11	3.69E-11	3.60E-11	3.49E-11	3.42E-11	3.35E-11	3.23E-11	3.20E-11	3.20E-11
	G-10 --	6.09E-10	3.22E-18	3.22E-18	3.22E-18	3.21E-18	3.21E-18	3.20E-18	3.10E-18	3.03E-18	2.85E-18
IMAGNET2	304SS --	3.96E-10	2.46E-12	8.12E-13	2.69E-13	5.04E-14	2.09E-14	1.22E-14	2.17E-15	8.11E-16	3.85E-16
	COPPER --	1.37E-09	8.99E-13	5.32E-13	2.77E-13	7.75E-14	2.41E-14	5.51E-15	6.28E-16	1.39E-16	3.20E-13
	NBTI --	3.00E-11	2.52E-13	2.49E-13	2.46E-13	2.41E-13	2.38E-13	2.36E-13	2.32E-13	2.31E-13	2.27E-13
	G-10 --	8.91E-13	4.75E-20	4.75E-20	4.75E-20	4.74E-20	4.74E-20	4.73E-20	4.59E-20	4.49E-20	4.21E-20
IMAG-HE2	304SS --	2.17E-12	7.03E-15	2.51E-15	8.17E-16	1.53E-16	6.85E-17	4.36E-17	8.09E-18	3.20E-18	1.59E-18
OMAGNET1	304SS --	1.82E-11	7.87E-14	2.76E-14	9.01E-15	1.69E-15	7.50E-16	4.72E-16	8.75E-17	3.49E-17	1.72E-17
	COPPER --	6.46E-11	1.54E-14	9.13E-15	4.76E-15	1.34E-15	4.22E-16	1.02E-16	1.19E-17	2.64E-18	6.03E-20
	NB3SN --	1.96E-12	1.70E-14	1.60E-14	1.65E-14	1.62E-14	1.60E-14	1.59E-14	1.56E-14	1.55E-14	1.53E-14
	G-10 --	1.33E-14	1.87E-21	1.87E-21	1.87E-21	1.87E-21	1.86E-21	1.86E-21	1.80E-21	1.76E-21	1.66E-21
OMAGNET2	COPPER --	5.75E-13	4.39E-17	2.60E-17	1.35E-17	3.79E-18	1.18E-18	2.76E-19	3.17E-20	7.02E-21	1.62E-22
	304SS --	1.63E-13	7.87E-16	2.79E-16	8.49E-17	1.46E-17	7.42E-18	5.43E-18	9.67E-19	3.46E-19	1.50E-19
	NBTI --	1.12E-14	9.50E-17	9.42E-17	9.34E-17	9.23E-17	9.16E-17	9.09E-17	8.97E-17	8.91E-17	8.76E-17
	G-10 --	3.95E-17	2.18E-23	2.18E-23	2.18E-23	2.17E-23	2.17E-23	2.16E-23	2.10E-23	2.08E-23	1.93E-23
SUPT-CYL	G-10 --	2.23E-23	2.23E-23	2.23E-23	2.22E-23	2.22E-23	2.22E-23	2.21E-23	2.15E-23	2.10E-23	1.97E-23
OH/EF	COPPER --	1.40E-15	3.82E-20	2.26E-20	1.17E-20	3.25E-21	9.86E-22	2.01E-22	2.17E-23	4.81E-24	1.11E-25
	304SS --	4.34E-16	7.71E-19	2.72E-19	8.71E-20	1.53E-20	7.57E-21	5.28E-21	9.02E-22	3.83E-22	1.89E-22
	NBTI --	1.85E-17	1.57E-19	1.56E-19	1.54E-19	1.53E-19	1.52E-19	1.51E-19	1.49E-19	1.48E-19	1.45E-19
	G-10 --	3.56E-20	2.42E-26	2.42E-26	2.42E-26	2.42E-26	2.42E-26	2.41E-26	2.34E-26	2.23E-26	2.15E-26
BLDGWALL	CONCRETE--	5.79E-12	5.55E-14	1.88E-14	4.95E-15	3.44E-16	2.39E-17	1.16E-19	8.90E-22	8.89E-22	8.86E-22

12.5 REACTOR ROOM ATMOSPHERIC ACTIVATION

In order to inert the reactor building for protection against possible fire hazards, several candidate gases have been considered in STARFIRE. This section examines the impact of the inert gas selection upon the reactor room activation. Three different gases of air, nitrogen and carbon-dioxide (each at one atmosphere; 14.7 psia at 70°F) are studied based on the 1.2 m-thick outboard bulk shield design(*) described in Sec. 11.2.2. Shown in Fig. 12-16 is the activation increase after reactor startup at a neutron wall load of 3.6 MW/m^2 and its decay after shutdown following five full year operation. The primary CO_2 radioactivity is due to the $^{16}O(n,p)^{16}N$ reaction. As the ^{16}N isotope has a short half-life of 7.1 s, its radioactivity decays very quickly (in about 10 minutes). Beyond this time period, the CO_2 activation is determined by the ^{14}C radioactivity ($\sim 10^{-14}$ Ci/m^3) induced by the $^{13}C(n,\gamma)$ reaction. The isotope ^{14}C is also produced in both air and nitrogen via the (n,p) reaction with ^{14}N, which is the largest naturally abundant isotope (99.76%) of nitrogen. Unfortunately, ^{14}C has a 5730 yr half-life and this is, in fact, the reason for the long residual activity in air and nitrogen. The current maximum permissible concentrations (MPCs) on air dillution are also plotted in Fig. 12-16. The residual radioactivity for both air and N_2 atmospheres is only a factor of 4 - 5 lower (a factor of $\sim$ 2 higher in the case of the 1.1 m-thick shield design) than the ^{14}C MPC. In addition, the activation of argon in the air makes a large contribution during reactor operation and for a short time after shutdown. The half-life of ^{41}Ar is 1.8 hr and hence, it is negligible for times greater than $\sim$ 1 day after shutdown. Perhaps the C in CO_2 could be routinely removed from the building atmosphere by using activated charcoal filters or by chemical reactions, for example. Furthermore, in the case of N_2, the equilibrium ^{14}C activation level associated with such a routine removal would be substantially lower than that shown in Fig. 12-16 (as the case for a stagnant gas

---

*Note that the reference outboard shield thickness has been selected as 1.1 m. Changing the thickness from 1.2 m to 1.1 m will increase the activation shown here by a factor of $\sim$ 10.

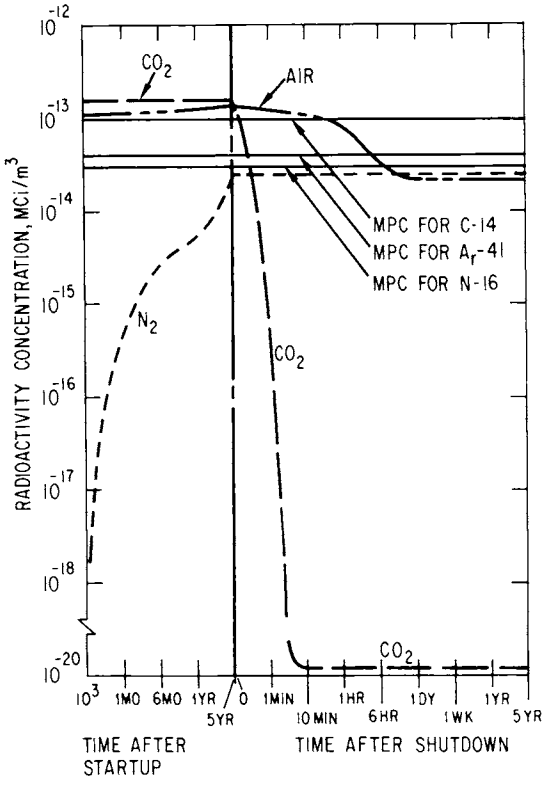

Figure 12-16. Activation of the candidate inert gases in the reactor building.

irradiation over 5 full power years). However, the amount of material which would have to be disposed because of the routine removal, would add to the long-term activated material inventory. Another potential problem concerning ^{14}C activation is, similar to tritium, adsorbing onto surfaces of reactor components and walls, and diffusing into them.

Based on the results shown here, it appears that the decision to inert the reactor building with CO_2 is justified from activation and fire prevention viewpoints.

References

1. B. Badger et al., "UWMAK-III, A Noncircular Tokamak Power Reactor Design", UWFDM-150, University of Wisconsin, Madison, Wisconsin (1976).

2. H. E. Stipp, et al., "Columbium: Mineral Commodity Profiles MCP-10, January 1978", the Bureau of Mines, U.S. Department of the Interior.

3. J. L. Morning, et al., "Chromium: Mineral Commodity Profiles MCP-1, May 1977", the Bureau of Mines, U.S. Department of the Interior.

4. J. Jung, "Theory and Use of the Radioactivity Code RACC," ANL/FPP/TM-122, Argonne National Laboratory (1979).

5. J. Jung, "Multigroup Neutron Activation Cross Section Library RACCXLIB and Decay Chain Data Library RACCDLIB for the Radioactivity Calculation Code RACC," Argonne National Laboratory, to be published (1980).

6. USNRC, "Standards for Protection Against Radiation", USNRC Rules and Regulations, Title 10, Chapter I, Part 20 (1975).

7. C. M. Lederer and V. S. Shirley (Editors), Table of Isotopes, 7th edition, John Wiley and Sons, Inc., N.Y. (1978).

8. G. Kessler and G. L. Kulcinski, "Radioactive Inventories of Reactor Economics", Chap. 5 of Fusion and Fast Breeder Reactors by W. Häfele et al., RR-77-8, International Institute for Applied Systems Analysis, Luxenburg, Austria (1976).

9. R. W. Conn et al., "Minimizing Radioactivity and Other Features of Elemental and Isotopic Tailoring of Materials for Fusion Reactors", Nucl. Technol. 41 (3), 389 (1978).

10. D. G. Gardner, "Model Calculations As One Means of Satisfying The Neutron Cross Section Requirements of the CTR Program", in Proc. of a Conference of Nuclear Cross Sections and Technology NBC Special Publication 425, Vol-II, edited by R. A. Shack and C. D. Bowma (1975).

11. J. Powell, et al., "Minimum Activity Blankets Using Aluminum Structure", in Proc. 1st Top. Mtg. Technology of Controlled Nuclear Fusion, CONF-740402-P, Vol. 1, 533, U.S. Atomic Energy Commission (1974).

12. D. J. Dudziak and R. A. Krakowski, "A Comparative Analysis of D-T Fusion Reactor Radioactivity and Afterheat", ibid, p. 546 (1974).

13. R. W. Conn, et al., "Comparative Study of Radioactivity and Afterheat in Several Fusion Reactor Blanket Designs", Nucl. Technol. 26, 391 (1975).

14. D. Steiner, "The Neutron-Induced Activity and Decay Power of The Niobium Structure of a D-T Fusion Reactor Blanket", ORNL-TM-3094, Oak Ridge National Laboratory (1970).

15. D. Steiner, "The Nuclear Performance of Vanadium As A Structural Material in Fusion Reactor Blankets", Nuclear Fusion 14, 1 (1974).

16. D. W. Muir and D. J. Dudziak, "Sensitivity of RTPR Afterheat and Radioactivity to ^{94}Nb Cross Section Uncertainty", Trans. Am. Nucl. Soc. 19 465 (1974).

17. D. L. Douglas et al., "A Long-Lived Activity in Neutron-Irradiated Niobium," Phys. Rev. 92, 369 (1953).

18. R. M. Brugger and R. L. Heath (Editors), "Nuclear Technology Branch Annual Progress Report," IN-1317, Idaho Nuclear Corp. (1970).

19. D. L. Smith, et al., "First-Wall/Blanket Materials Selection for STARFIRE Tokamak Reactor", to be published in the Proceeding of the Fourth ANS Topical Meeting on the Technology of Controlled Nuclear Fusion, King of Prussia, Pennsylvania, October 14, 1980. And also see Chapter 8.

20. D. Richter and W. Körner, "Disposal of Radioactive Wastes Produced in Nuclear Installations in the German Democratic Republic", IAEA-SM-207/44, in Symposium on the Management of Radioactive Wastes from the Nuclear Fuel Cycle, Vol. II, p. 271, Vienna, 1976.

21. "Radiation Exposure from Consumer Products", Safety Topic of the Month, Occupational Health and Safety Division, Argonne National Laboratory, May (1980).

22. G. G. Eichholz, Environmental Aspects of Nuclear Power, p. 159, Ann Arbor Science, Ann Arbor, Mich. (1977).

Table of Contents

		Page
13.1	INTRODUCTION AND SUMMARY	13-1
	13.1.1 System Functions and Design Criteria	13-1
	13.1.2 General System Description	13-1
13.2	FIRST WALL/BLANKET PRIMARY LOOPS	13-2
	13.2.1 Primary Loop Configuration	13-2
	13.2.2 System Performance	13-5
	13.2.3 Primary Loop Components	13-7
13.3	LIMITER FEEDWATER LOOP	13-11
	13.3.1 System Configuration	13-11
	13.3.2 System Performance and Component Description	13-12
13.4	RESIDUAL HEAT REMOVAL LOOP	13-14

List of Figures

Number		Page
13-1	Primary coolant loops with residual heat removal loop	13-5
13-2	Typical support system module - primary coolant loop	13-8
13-3	Limiter feedwater loop	13-12

List of Tables

Number		Page
13-1	Comparison of One- and Two-loop Configurations . . .	13-2
13-2	Primary Loop Parameters	13-7
13-3	Steam Generator Design Data	13-9
13-4	Limiter Feedwater Loop Parameters	13-13
13-5	Residual Heat Removal Loop Major Parameters	13-14

13.1 INTRODUCTION AND SUMMARY

13.1.1 System Functions and Design Criteria

The thermal energy deposited in the blanket, first wall and limiter is converted to electricity in the steam power conversion system. The primary function of the heat transport system is to remove this thermal energy from the reactor and deliver it to the power conversion system at a sufficiently high temperature that reasonable efficiencies may be attained. This transport of energy is to be accomplished while maintaining the temperature of the first wall, blanket and limiter within specified limits. In addition, this system must remove the low level of residual heat generation in the blanket when the reactor is shut down. And finally, the heat transport system must be capable of heating the blanket, first wall and limiter as well as its own components to operating temperature in a prescribed manner during reactor startup.

In order to maximize the net electric power produced, the criterion for heat transport system parasitic power was set at <1% of the thermal power. Safety considerations received major emphasis in establishing system configurations. For example, because the heat transport system working fluids are potentially contaminated with tritium and activated particulates, it was decided to locate system components inside the confines of the lined, pressure-containing reactor building.

13.1.2 General System Description

Separate heat removal systems operating at different pressure and temperature levels are utilized for the first wall/blanket and the limiter. Dual parallel primary coolant loops cool the twenty-four first-wall/blanket sectors. The power deposited in the limiter, approximately 5% of the total thermal power, is removed by the limiter/feedwater loop and is used for feedwater heating in the steam power conversion system. Systems studies have indicated that recovery and conversion of the limiter themal energy is economically attractive, even though it is at a lower temperature than the primary loop. Thermal energy removed from other reactor components (e.g., shield, rf waveguides, structure) is at such low temperature that its utilization in the power conversion system is not feasible. For STARFIRE, water

is the preferred coolant (see Chap. 5) and is utilized in both the first wall/blanket and limiter cooling circuits.

13.2 FIRST WALL/BLANKET PRIMARY LOOPS

13.2.1 Primary Loop Configuration

Both single and dual loop configurations were considered for the first wall/blanket cooling system. A comparison of the two options is shown in Table 13-1.

Table 13-1. Comparison of One- and Two-loop Configurations

Consideration	One Loop	Two Loops
Potential maximum building overpressure	0.193 MPa (28 psi)	0.096 MPa (14 psi)
Reactor operating power with one of 4 steam generators out of service	∿75%	∿50%
Pipe, valve sizes	Larger than commonly used now; likely available in STARFIRE time frame	Typical of current power plants
System cost		slightly higher because of additional (though smaller) components
Protection of first/wall blanket system	Major rupture of ring manifold or piping could result in rapid system depressurization and possible loss of coolant.	Complete loss of coolant extremely unlikely; one of two loops always capable of afterheat removal via primary circuit or residual heat removal system.

The one and two loop options actually refer to the number of independent circuits through the blanket and first wall. The two independent circuits are dual and not redundant for normal operation. Each circuit provides $\sim$ 50% of the heat removal capability for each of the individual modules which comprise each blanket sector. Independent circuits imply independent ring manifolds and therefore independent piping systems to the steam generators. (Because of size considerations, there are four steam generators and one can consider four separate piping systems between the steam generators and the ring manifolds which feed the blanket. This is, however, only a secondary consideration with minor overall implications and was not considered a key part of the loop configuration question.)

As seen in the table, the primary advantages of the one loop system are an anticipated slightly lower cost (probably less than 0.1% of the total reactor plant cost) and the capability to run at a higher part-load power level in the event of shutdown and isolation of a steam generator. The primary benefit of the dual independent blanket loops is the additional protection of the blanket sectors against overheating and possible damage following loss of coolant events. Afterheat in the blankets can be easily removed by the residual heat removal system provided continuous coolant flow can be maintained. A complete and unbroken piping circuit, while not essential if sumps are provided, is highly desireable to simplify operations. For a single loop system, a major rupture could result in rapid depressurization, flashing of water into steam, and subsequent loss of coolant. Reintroduction of coolant flow in the hot blanket could be difficult because of the need to locate the leak and make the necessary valving adjustments (possibly reversing the direction of flow if the break is on the inlet side of the blanket) to assure that coolant flows through the blanket before passing out of the break. For blankets with the reference Zr_5Pb_3 neutron multiplier, afterheat in the uncooled blankets would cause a temperature rise to $\sim$ 700°C in less than 10 minutes. This is considered to result in partial annealing of the 20% cold worked austenitic stainless steel first wall, second wall and header coolant tubing; the accompanying reduction in mechanical properties would make the components unfit for further reactor operation. Moreover, with a single loop, continued cooling with a leaking blanket or ruptured manifold would require continuous spillage into the shield cavity or into a sump beneath the reactor from which coolant could be re-circulated through the

residual heat removal system and back into the blanket. While this is probably feasible, it is undesirable, especially in the event of a tube rupture inside the blanket. In this case, activated or tritium-containing breeder or multiplier material could become entrained in the coolant flow and be dispersed throughout the system. The use of dual loops in the reference blanket described in Chap. 10 permits the residual heat removal coolant to be circulated through either of the two loops as desired, so that a faulted or ruptured circuit can be bypassed completely to adequately cool all regions of the module in all sectors. The dual loop configuration also permits a more orderly (longer) plasma shutdown to be accomplished (i.e., without a major disruption) in the case of loss of coolant flow in a single circuit since at least partial cooling capability will still be present in the blanket to remove the additional surface and neutronic heating experienced during the longer shutdown.

A secondary benefit of the dual loop configuration is the lower reactor building over-pressure which would occur as a consequence of certain loss of coolant events. The reduction in maximum overpressure of $\sim$ 0.1 MPa (14 psig) could be expected to result in reactor building cost savings, for the buttressed reactor building approach in which the basic wall thickness is fixed by shield requirements which would remain unchanged; however, the size and the cost of the buttresses would vary with the building design pressure.

A simplified schematic of the primary coolant system which consists of piping and valves, pumps, pressurizers, and steam generators is shown in Fig. 13-1. Details of the supporting systems, such as the water makeup and conditioning system and instrumentation and controls are not shown. While these systems are necessary and important, it is anticipated that they will have little if any impact on other reactor systems and therefore, a detailed definition of their characteristics was not developed in this study. Two independent circuits provide water coolant to each blanket sector through dual inlet and outlet headers (or ring manifolds). From the outlet header the hot coolant passes through two parallel steam generators and then to the pumps from which it is returned to the inlet ring manifold. The pressurizers, one for each loop, are connected directly to the inlet manifolds. The residual heat removal loop, which is described below, is shown in this figure also and connects across the inlet and outlet manifolds.

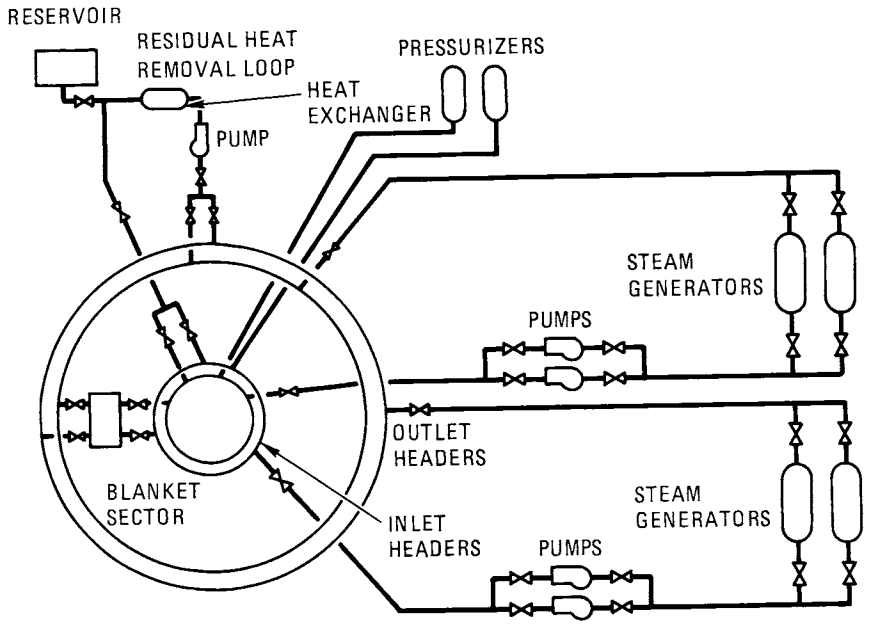

Figure 13-1. Primary coolant loops with residual heat removal loop.

Because STARFIRE operates steady-state rather than in a pulsed mode, a thermal energy storage system is not required. Moreover, it is believed feasible to keep the tritium concentration in the primary coolant low enough such that an intermediate loop is not needed.

13.2.2 System Performance

Major primary loop design and performance parameters are shown in Table 13-2. Primary coolant leaves the blanket at 320°C and is returned at 280°C. This 40°C ΔT, which is comparable to that in pressurized water fission reactors, was selected to be compatible both with an adequately high feed-water temperature into the steam generator and with blanket thermal design considerations. Initially it was desired to operate with a larger water ΔT, possibly as high as 100°C, the incentive of course being the reduction of coolant flow rate in order to achieve some combination of reduced pumping power and smaller pipe size both inside and outside the blanket. Increasing the maximum coolant temperature did not appear practical because of the corresponding steep increase in saturation pressure. Decreasing the blanket

coolant inlet temperature therefore, is the only feasible means of increasing system ΔT. Unfortunately, a reduction in blanket inlet temperature (steam generator outlet temperature) must be accompanied by a reduction in steam generator feedwater inlet temperature in order to avoid pinch point problems. Because this leads to a reduced cycle efficiency, higher coolant ΔTs were not utilized and the more "PWR-like" temperatures were adopted. The pressure throughout the primary loop is maintained in the 14.2-15.2 MPa (2050-2200 psi) range.

The pressure drop through the system is about 1.0 MPa (150 psi). Approximately half of this occurs through the main piping, through valves, and in the ring manifolds. About 10% occurs in the steam generator, with the remaining 40% being consumed in the blanket and in the piping and valves between the ring manifolds and the blanket. The maximum velocity in the main piping system is 15 m/s which yields a pipe inside diameter of about 1.0 m. A slightly higher velocity of 20 m/s was utilized in the removeable lines between the ring manifolds and the blanket in order to keep those lines as small as feasible where they penetrate the shield door. These water velocities are comparable to those in current power reactors. The electric power required to pump the primary coolant is about 30 MW or about 3/4 of one percent of the thermal power.

The volume of coolant in the primary loop is of interest because the overpressure resulting from a loss of coolant event increases as the coolant volume increases. The total volume of water is slightly over 500 m^3 with half in each of the two loops. About 1/3 of the coolant is in the steam generators, about half is in the piping and manifolding, with the remainder distributed in the blanket, pressurizers, and other system components.

The plant startup scenario is described in Chap. 19. Desired heat-up rates which are estimated to be compatible with allowable thermal stresses have been proposed. The thermal capacity of the primary loop is about 5 x 10^9 J/°K, of which about 50% is the water itself, and 30% is the blanket. During startup, approximately 30 MW of pump heat is available as is about 2 MW from the pressurizer heaters. In addition, during all startups except the initial one, approximately 6 MW of afterheat will be available (assuming a 30 day shutdown) from the blanket sectors which are still in operation.

With this 35-40 MW of heating, the system heat-up rate is about 25°C/hr, a rate compatible with the desired plant startup scenario. During the initial plant startup when there is no blanket afterheat, the system will come to temperature at a slightly slower rate.

Table 13-2. Primary Loop Parameters

Coolant	Water
Heat Load	3800 MW
Blanket Outlet Temperature	320°C
Blanket Inlet Temperature	280°C
Operating Pressure	15.2 MPa (2200 psi)
Number of Independent Loops	2
Maximum Pipe Size	0.99 m I.D.
Maximum Velocity	20 m/s
Pumping Power	30 MW
Coolant Volume	$\sim$ 500 m^3
Number of steam generators	4
Number of pumps	2 per loop
Pump Capacity	50% of total required capacity

13.2.3 Primary Loop Components

The primary loop components, because they are potentially contaminated with tritium or activated particulates, are located inside the shielded, lined, pressure-containing reactor building for safety considerations. Moreover, in line with the maintenance philosophy adopted for STARFIRE, these components are modularized to the extent practical and remotely maintained.

The piping system which interconnects the primary loop components is constructed of stainless steel or carbon steel with internal stainless steel cladding. The main pipes which are sized to keep velocities and pumping power requirements within acceptable limits are 0.99 m I.D. (39 in.). The pipe run from the reactor to the steam generators and back is about 75 m and is located beneath the reactor building floor but inside the pressure boundary. Ring manifolds of the same maximum diameter as the primary piping are recessed into the floor beneath the vacuum pumps as shown in Fig. 2-3.

Ninety-six inlet and ninety-six outlet lines, approximately 18 cm in diameter, connect the ring manifolds to the blanket sectors. Each of these lines incorporates a valve near where it branches from the manifold in order that individual blanket sectors may be isolated. In addition, appropriate fittings are provided so that portable residual heat removal equipment may be connected when blanket segments are being replaced. While design details have not been developed, it is envisioned that valving will be incorporated into the system so that an entire loop, a steam generator, or a pump can be isolated from the rest of the system for inspection or repairs.

Each loop incorporates two vertical, straight-tube-and-shell steam generators connected in parallel. These units, rated at 950 MW each are shown in Fig. 13-2. The four units provide 7.3 x 10^6 kg/h of slightly superheated steam at 299°C and 6.3 MPa (800°F and 910 psi) to the turbines. The steam generators are approximately 24 m in height and 2.7 m in diameter with a mass of about 300,000 kg each. Major design data are shown in Table 13-3.

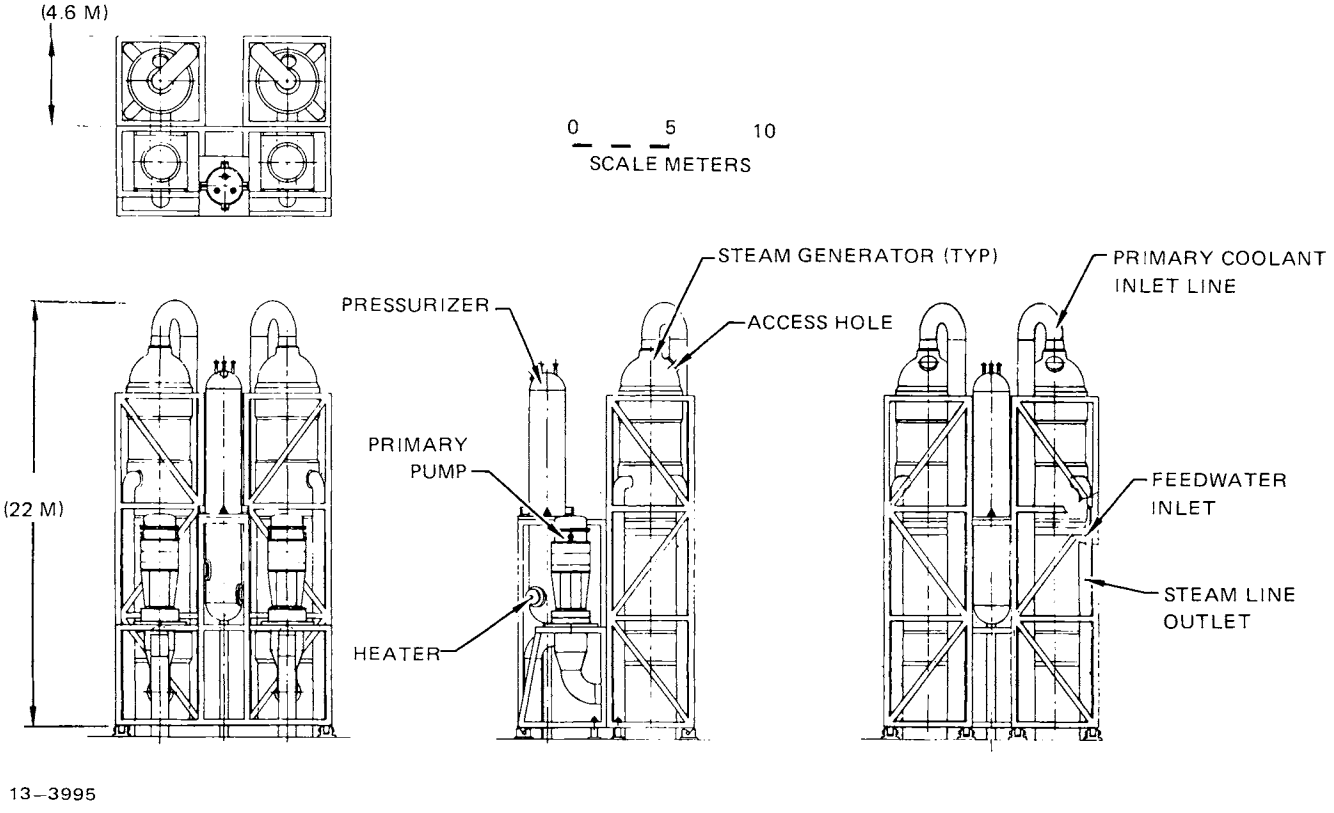

Figure 13-2. Typical support system module - primary coolant loop.

Reactor coolant enters the top of the steam generator, flows downward through the tubes and out at the bottom where it passes to the primary pumps. On the secondary side, feedwater enters at the side of the shell, passes downward through an annulus just inside the shell, and flows upward on the outside of the tubes where it is converted to steam and superheated. The hemispherical heads, the tubesheets and the tubes are all exposed to the high pressure primary coolant.

The steam generators, like all components inside the reactor building, are maintained remotely. They will be designed with access provisions such that automated inspection equipment and repair machines can, for example, be inserted inside the hemispherical head where tube leak checking and repair activities can be performed.

Table 13-3. Steam Generator Design Data

Number and Type	4 vertical straight-tube- and shell steam generators
Heat Transferred	950 MW each
Primary Coolant Inlet Temp.	320°C
Primary Coolant Outlet Temp.	280°C
Steam Flow Rate	7.3×10^6 kg/h total
Steam Outlet Temp	299°C (800°F)
Steam Outlet Pressure	6.3 MPa (910 psi)
Feedwater Temperature	235°C (455°F)
Height	22 m
Diameter	2.7 m
Tube O.D.	1.59 cm (.625 in.)
Tube Wall	0.9 mm (.034 in.)
Tube material	Inconel 600
Shell Material	Low Carbon Steel
Dry Mass	300,000 kg

Each of the two loops contains a pair of vertical, single-stage shaft seal pumps which circulate approximately 60×10^6 kg/h of primary coolant, developing a head of about 105 m. The pumps, which take suction from a

common manifold just beyond the steam generator outlet, are driven by electric motors. These 7.5 MW (10,000 hp) units are comparable in size to those utilized in current water-cooled fission reactors.

The pump itself and the support system into which it is assembled (Fig. 13-2), are designed such that the complete motor-pump assembly can be lifted out of the casing for inspection or repair without separating the casing from the piping. This permits rapid replacement of those components which are most likely to fail. In the event one of the 50% capacity pumps in a given loop must be removed from service, this unit can be valved out of the system while the reactor operates at $\sim$ 50% of maximum power. Remote maintenance can then be performed without shutting down the plant. Some consideration was given to incorporating a third 50% capacity pump into each loop so that full power operation could continue during repair of a single pump. A preliminary assessment indicated pump reliability is probably high enough so that redundancy is not warranted and a third pump was not incorporated; however a subsequent more detailed availabilty assessment (Sec. 19.3.5.2) indicated three pumps may be desireable and future studies will investigate the question in greater depth.

Pressurizers, similar to those utilized in current pressurized water fission reactors, are used to maintain the proper primary coolant pressure. Electric immersion heaters located in the lower section of the tank are utilized to heat the pressurizer water inventory and increase the pressure, while water sprays in the upper part of the vessel are used to condense steam and decrease the pressure. The STARFIRE pressurizers, one for each loop, are connected directly to the inlet ring manifolds. This allows for pressure control of the coolant in the blanket even when that loop has been isolated. The pressurizer can therefore provide pressure control when the residual heat removal system is operating.

The pressurizers are shown in a possible mounting arrangement in Fig. 13-2. The flanged covers near the bottom of these units are the locations through which the heaters may be removed for replacement. This may be accomplished as a total remote operation while the reactor is shut down and the pressurizer has been isolated and drained.

The primary coolant circuit will be serviced by a water makeup and conditioning system which will maintain the proper water purity and chemistry, provide the appropriate water inventory, and will be the source from which primary coolant is directed to the tritium facility for tritium removal. While design of this support system depends upon primary loop definition which is beyond the scope of the present effort, some preliminary estimates of components and their sizes were made by scaling from similar PWR systems in order to approximate building space requirements. It was assumed that such a system would incorporate (for each loop) a pair of regenerative heat exchangers, a nonregenerative heat exchanger (letdown cooler), a letdown orifice and valve, a demineralizer bed, coolant filters, a makeup surge tank, a chemical mixing tank, two charger pumps and interconnecting piping. A first cut evaluation indicated that these components would fit within about 2/3 of a 4.6 x 4.6 x 21.5 m standard support system module inside the reactor building with sufficient room for maintenance and component replacement. It is emphasized that coolant purity requirements, impurity sources, makeup requirements, etc., have not been firmly established, and therefore the system cited here should be interpreted as the type of modularized support system which will be incorporated rather than the definition of a specific system for STARFIRE.

13.3 LIMITER FEEDWATER LOOP

13.3.1 System Configuration

As discussed above, the thermal energy deposited in the limiter is utilized for feedwater heating in the power conversion system. This energy is transported by the limiter feedwater loop. Unlike the dual blanket/first wall primary loops, a single water loop is utilized in this system. The considerations which were dominant factors in the selection of two primary loops are not significant for the limiter cooling circuit. The water inventory is an order of magnitude less and the pressure is $\sim$ 25% that of the primary loops so that building overpressurization is a minor factor. Moreover, the use of two separate coolant circuits in the limiter to alleviate problems arising from loss of coolant events is probably of minor benefit for two reasons. First, because the limiter is constructed of a refractory material it is more tolerant to large temperature excursions. And second, with the relatively high

heat load which the limiter experiences, the local temperature excursion of a passage which has lost coolant or coolant flow is likely to be relatively insensitive to whether or not cooling is maintained in the adjacent passage, at least over the time it takes to shut down the plasma in an orderly manner (i.e., without a major disruption). Therefore, since there appear to be no major incentives for a dual limiter loop configuration, a single water circuit was adopted for the limiter feedwater system.

The system is shown in a simplified schematic in Fig. 13-3 and incorporates piping and valves, pumps, a pressurizer, feedwater heaters, a water conditioning system and the appropriate controls and instrumentation. From the outlet header, the water coolant is transported through the piping system to the three feedwater heaters, from which it passes to the pumps to be returned to the limiters through the inlet ring manifold. The pressurizer is connected to the hot leg of the loop. For reasons similar to those for the primary loop, an intermediate loop is not required.

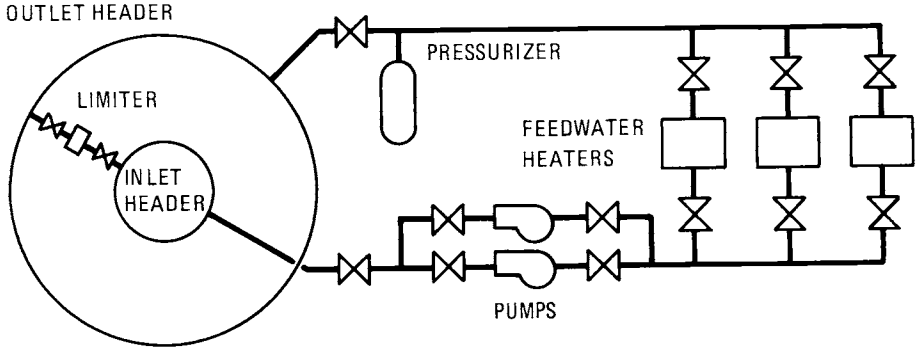

Figure 13-3. Limiter feedwater loop.

13.3.2 System Performance and Component Description

System design data is shown in Table 13-4. With a system ΔT of 30°C, the flowrate in the single loop is 1550 kg/sec. The coolant velocity in the

piping is limited to a maximum of 10 m/s in order to keep the pressure drop to a reasonable 1.3 MPa (190 psi). Inlet and outlet ring manifolds of 0.47 m inner diameter are located below the reactor, and 10 cm feed lines which penetrate the shield doors connect the ring manifolds to the limiters. Piping from the ring manifolds runs beneath the reactor floor to the system components which, like the primary loop components, are mounted in standard modules in the other end of the reactor building. This modularity approach is consistent with the total remote, remove-and-replace maintenance philosophy for those systems which are potentially contaminated with tritium or activated particulates. The hot coolant is directed through the three parallel feedwater heaters. These units, rated at ∿ 70 MW each, are described in more detail in Chap. 20. Two 1.4 MW coolant pumps take suction from the feedwater heater outlet manifold and return the coolant to the inlet ring manifold via the return piping. Valves are provided such that if one feedwater heater or one pump becomes unavailable, they can be isolated from the system (and replaced or repaired remotely) and reactor operation continued at partial load.

Table 13-4. Limiter Feedwater Loop Parameters

Coolant	Water
Heat Load	200 MW
Limiter Outlet Temperature	145°C
Limiter Inlet Temperature	115°C
Maximum Coolant Pressure	4.11 MPa (600 psi)
Number of Loops	One
Maximum Pipe Size	0.47 m ID
Maximum Velocity	10 m/s
Pumping Power	2.8 MW
No. of Feedwater Heaters	Three
No. of Pumps	Two

13.4 RESIDUAL HEAT REMOVAL LOOP

When the reactor is shut down, the afterheat generation rate in the blanket is sufficiently large to require active cooling. Initially, this function is performed by one of the primary loops, however, as the heat load decreases and the coolant temperature drops, the residual heat removal system assumes this task. The system, which consists of pumps, a heat exchanger, a reservoir, plus associated piping, valves and controls, is shown schematically in Fig. 13-1 along with the primary loops.

The scenario for shutting down the reactor to a cold condition such as prior to the regular scheduled annual maintenance is given in Chap. 19. As indicated in that description, heat rejection during the initial phases is via one of the primary loops. When the appropriate pressure and temperature levels have been reached (approximately 2.8 MPa and 175°C), the residual heat removal loop is activated and becomes the heat sink during the remainder of the cooldown period.

As indicated in Fig. 13-1, the system is plumbed into both primary loops at the inlet and outlet ring manifolds (headers). Valving with appropriate interlocks prevents circulating residual heat removal coolant through both loops simultaneously. This is to prevent the possibility of loss of all coolant in case of a rupture of one of the loops. During operation the coolant enters the primary coolant inlet manifold, flows through the blanket sectors, is collected in the outlet manifold, passes to the pump, and finally through the heat exchanger where the thermal energy is dissipated.

Major system parameters are given in Table 13-5. The system is sized for a maximum heatload of 60 MW, the blanket and first wall afterheat generation rate approximately 12 h after shutdown and the earliest time at which blanket sector removal would begin.

Table 13-5. Residual Heat Removal Loop Major Parameters

Design Heat Load	60 MW
Maximum ΔT	40°C
Flow Rate	360 Kg/s
Pumping Power	∿ 0.6 MW(e)
Number of Pumps	2 @ 100% each, in parallel

Table of Contents

		Page
14.1	INTRODUCTION	14-1
14.2	PARAMETRIC ANALYSIS	14-1
14.3	FUEL PROCESSING	14-6
14.4	TRITIUM IN THE COOLANTS	14-8
14.5	ATMOSPHERIC TRITIUM RECOVERY (ATR) SCENARIOS	14-11
14.6	TRITIUM FACILITY	14-20
14.7	TRITIUM REFERENCE PARAMETERS	14-24
14.8	CONCLUSIONS	14-24

List of Tables

Number		Page
14-1	Tritium Permeation Calculations	14-10
14-2	Tritium "Insertion" Calculations for Beryllium	14-10
14-3	Tritium Facility Components	14-21
14-4	Reference STARFIRE Tritium Parameters	14-25
14-5	STARFIRE Tritium Inventory	14-26

List of Figures

Number		Page
14-1	Fuel Cycle Scenario for STARFIRE	14-2
14-2	Dependence of the fractional burnup and the tritium exhaust per day on the tritium reflection coefficient . .	14-3
14-3	Dependence of the total tritium inventory and the pump tritium inventory on the tritium reflection coefficient .	14-4
14-4	Dependence of the fractional burnup and tritium exhaust per day on the tritium confinement time.	14-5
14-5	Dependence of the total inventory and pump inventory on the tritium confinement time	14-6
14-6	Dependence of the tritium throughput rate for a fixed fusion power on the ratio of the deuterium/tritium ion density	14-7
14-7	Tritium permeability of several materials as a function of temperature	14-9
14-8	Dependence of tritium concentration after release on reaction rate of forming HTO	14-14
14-9	Dependence of tritium concentration after release on ratio between the rate of releasing HTO from surfaces and the rate of adsorbing HTO	14-15
14-10	Dependence of adsorbed tritium concentration after release on different HTO release rates for REL/ADS = 1	14-16
14-11	Dependence of tritium concentration after release on building volume	14-17
14-12	Dependence of tritium concentration after release on processing rates and surface areas exposed	14-18
14-13	Dependence of adsorbed tritium concentration after release on processing rates and surface areas exposed . .	14-19
14-14	First level of tritium facility	14-22
14-15	Second level of tritium facility	14-23

14. INTRODUCTION

14.1 Introduction

The primary goal in the design of the tritium handling systems for the STARFIRE fusion plant is to produce a completely integrated tritium fuel cycle, independent of any off-site tritium sources when the plant is operational. The following objectives are also adopted: (1) a minimum tritium inventory is maintained in the entire plant, (2) the tritium impact on the environment is minimized, (3) worker exposure is reduced to levels as low as practical, (4) tritiated waste generation is minimized, (5) the tritium systems are operated in areas free of gamma or neutron radiation, where possible, and (6) the tritium systems are designed to have maximum reliability and availability. To implement these objectives, information accumulated in previous studies[1-4] and being developed at Tritium Systems Test Assembly (TSTA)[5] has been incorporated into the STARFIRE design.

The complete tritium fuel cycle scenario is shown in Fig. 14-1. The tritium handling systems perform the following functions: (1) reprocess tritium for fueling; (2) process tritium produced in the blanket; (3) control the amount and location of tritium in the plant; and (4) process tritiated wastes. The first function includes units which chemically purify and isotopically enrich the fuel. The tritium generated in the blanket as T_2O(HTO) is electrolyzed and then passed to the main fuel cycle to be processed. The location of tritium in the plant is handled by a storage and disposition system. Several treatment systems maintain low tritium levels in the secondary enclosures (controlled-atmosphere glove boxes and double-walled pipes) and in the coolant systems. The atmospheric tritium recovery systems are designed to scrub the atmosphere of a tritium handling area in the event of a tritium release. The tritiated wastes (solids, liquids, gases) which accrue as by-products from various tritium handling systems are detritiated and/or consolidated by several different units. Greater detail on these systems, most of which are based on prototypes at TSTA,[5] will be provided in subsequent sections.

14.2 Parametric Analysis

To minimize the tritium inventory for the STARFIRE fusion reactor design, sensitivity studies were performed to determine the dependence of the tritium inventory on several of the plasma design parameters. The two most important

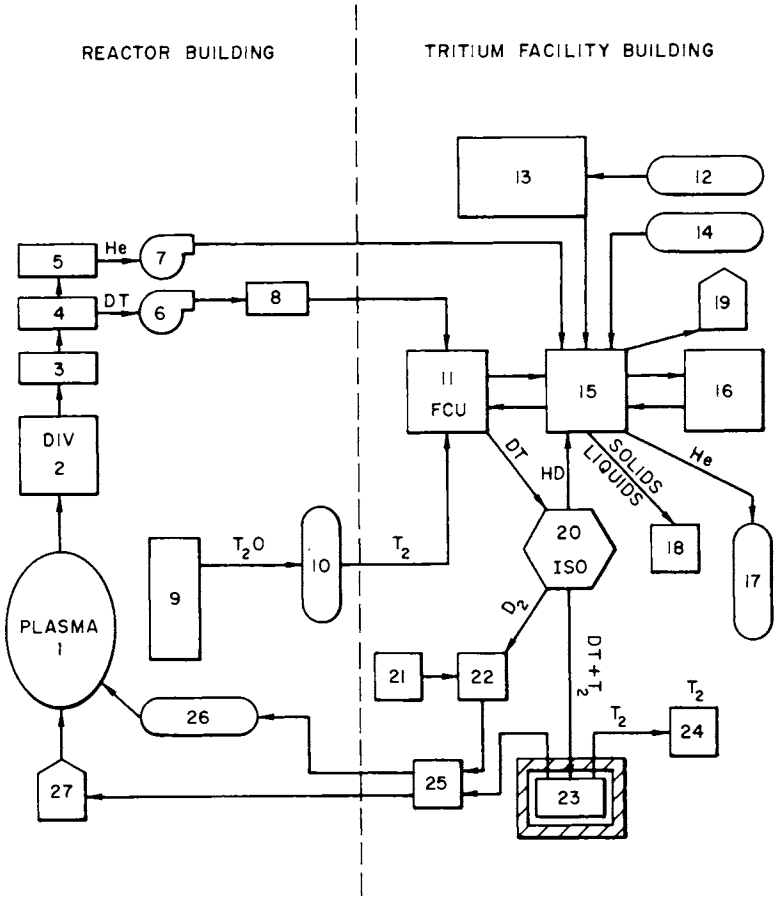

1. Plasma Chamber
2. Limiter Plates
3. Debris Separator
4. D-T Cryocondensation Pump
5. Helium Pump
6,7. Regeneration Pumps
8. Metal Bellows Pumps
9. Breeder Blanket
10. Electrolysis Unit
11. Fuel Cleanup Unit
12. Tertiary Enclosures
13. Atmospheric Tritium Recovery System
14. Secondary Enclosures, Purge Streams
15. Tritiated Waste Treatment
16. Tritiated Water Recovery Unit
17. Helium (tritium-free)
18. Tritiated Waste -- Liquids and Solids
19. Detritiated Gases: N_2, O_2, CO_2, Ar
20. Isotopic Separation Unit
21. D_2 Supply
22. D_2 Storage
23. DT and T_2 Storage
24. T_2 Shipment/Receiving
25. Fuel Blender
26. Gas Fueling
27. Pellet Fueler

Figure 14-1. Fuel Cycle Scenario for STARFIRE.

parameters are the tritium confinement time, τ_T, which is the average time that a tritium ion remains in the plasma and the tritium reflection coefficient, R_T, which is the probability that a tritium particle will return to the plasma after it escapes the plasma edge.

In Fig. 14-2, both the fractional burnup and the tritium exhaust per day are plotted as functions of the tritium reflection coefficient R_T with $\tau_T = 1.8$ s; in Fig. 14-3, the pump tritium inventory and the total tritium inventory are plotted. The fractional burnup is proportional to R_T while the tritium exhaust per day, the pump tritium inventory and the total tritium inventory are proportional to $1/R_T$. Therefore, to minimize the tritium inventory in the plant, a large R_T is required which means a maximum fractional burnup. As noted in Sec. 8.5, the use of a limiter results in a R_T of 0.9 with an associated fractional burnup of 0.42 and a tritium inventory of 60 g in the pumps. Since the total tritium inventory includes 10 kg held in the breeder

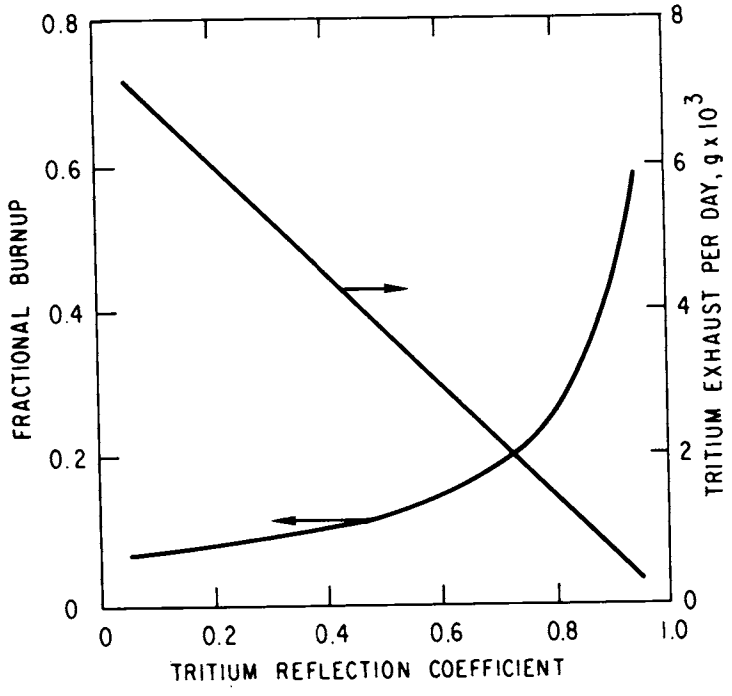

Figure 14-2. Dependence of the fractional burnup and the tritium exhaust per day on the tritium reflection coefficient.

blanket and 1 kg held in storage (a 2 d burn requirement), both of which are unaffected by changes in the reactor design parameters, the total tritium inventory increases only slightly as R_T decreases. Most of the increase however occurs in the pump tritium inventory, which is considered more subject to accidental release, i.e., relatively "vulnerable" (see Sec. 14-7). With $R_T = 0.9$, $\sim$ 15% of the "vulnerable" inventory is located in the compound cryopumps while with $R_T = 0.2$, $\sim$ 40% is in the pumps. Because the pump tritium inventory is directly proportional to the pump residence time, a minimum pump regeneration time is desirable. However, a regeneration cycle time of 2 h is required to assure reasonable valve reliability (Sec. 8.5.3). Doubling the regeneration time to 4 h would double the pump inventory; in the event of a pump failure, a larger tritium release would occur.

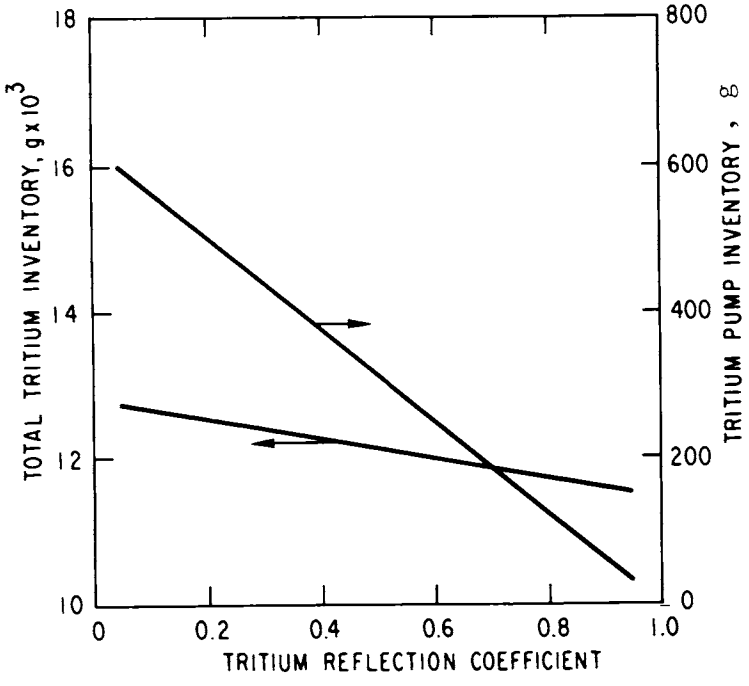

Figure 14-3. Dependence of the total tritium inventory and the pump tritium inventory on the tritium reflection coefficient.

In Fig. 14-4, the fractional burnup and the tritium exhaust per day are plotted as functions of the tritium confinement time τ_T with $R_T = 0.9$; in Fig. 14-5, the pump tritium inventory and the total tritium inventory are plotted. The fractional burnup increases with τ_T while both the tritium exhaust per day and the pump tritium inventory decrease with increasing τ_T. The total tritium inventory is constant until $\tau_T < 3$ s because of the large amount of tritium held in the blanket (10 kg) and in storage (1 kg); thereafter, it is inversely proportional to τ_T. If R_T is < 0.9, varying τ_T would have a much more dramatic effect on all tritium parameters.

The effect of varying the ratio of the deuterium ion density n_D to the tritium ion density n_T for a fixed power reactor (STARFIRE design) is shown in Fig. 14-6. For a "lean tritium" burn scenario, i.e., $n_D/n_T > 1$, a substantial reduction in the tritium throughput rate occurs because while the fusion power is proportional to $n_T \cdot n_D$, the tritium exhaust rate, T_{ex} is proportional to $n_T (1 - n_D\varepsilon)$, ε being the fractional burnup. (T_{rel} is n_T/n_{T_o} where n_{T_o} is the tritium density if $n_D/n_T = 1$).

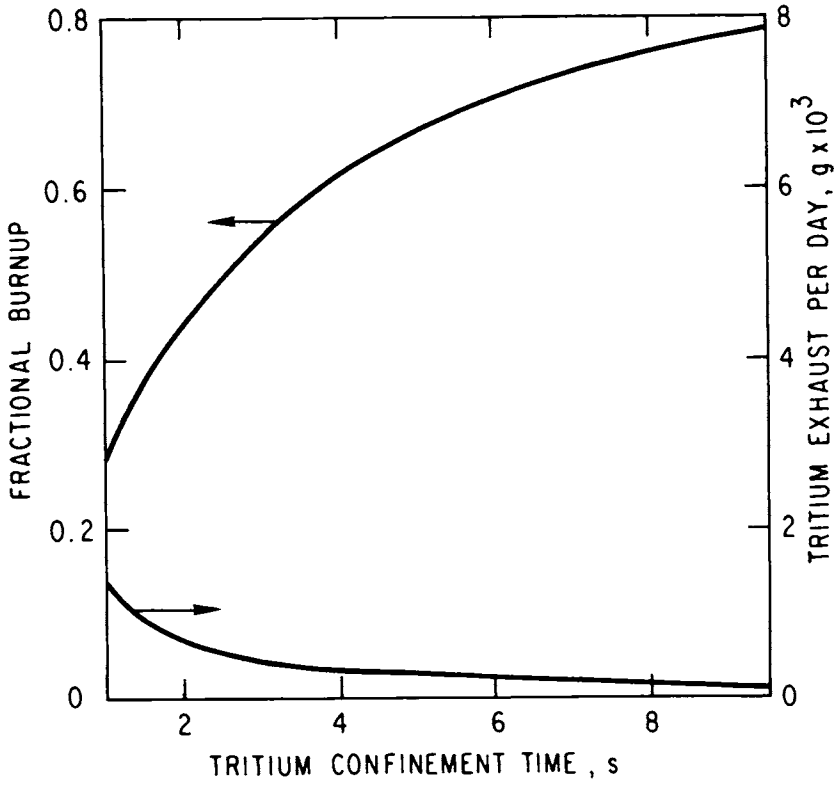

Figure 14-4. Dependence of the fractional burnup and tritium exhaust per day on the tritium confinement time.

14.3 Fuel Processing

The main fuel pathway as shown in Fig. 14-1 begins at the plasma chamber, proceeds to the compound cryopumps and thence to the fuel cleanup unit (FCU). The purified fuel is passed to the isotopic separation system (ISS) after which the D_2 and the T_2 fuel streams are either stored until needed or are passed directly to the fuel blenders (FBU). There the needed fuel mixtures are prepared for use in the reactor fueling devices. A tritium feed stream from the breeder blanket joins the main stream at the fuel cleanup unit. A smaller tritium feed stream from the tritiated waste treatment system (TWT) also joins the main stream at the fuel cleanup unit. The TWT processes tritium from various waste streams including small amounts which accrue from secondary enclosures, the coolant, and atmospheric processing systems. Within the main fuel feedstream, the transfer of fuel between different components as well as the maintenance of uniform flow is handled by transfer pump units (TPU) which are composed of surge tanks, bellows pumps and appropriate valving systems.

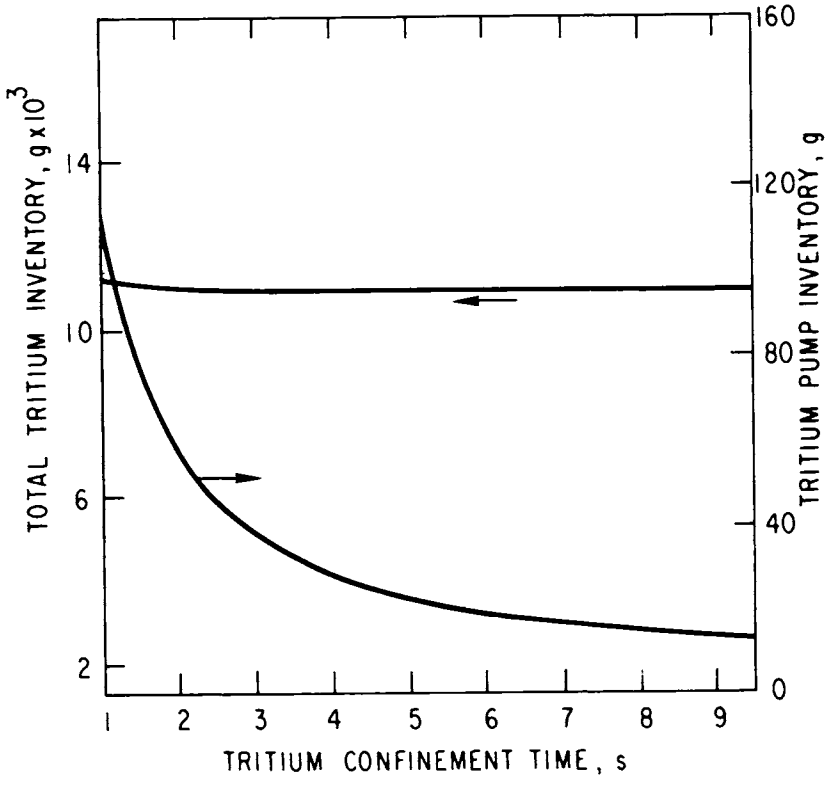

Figure 14-5. Dependence of the total inventory and pump inventory on the tritium confinement time.

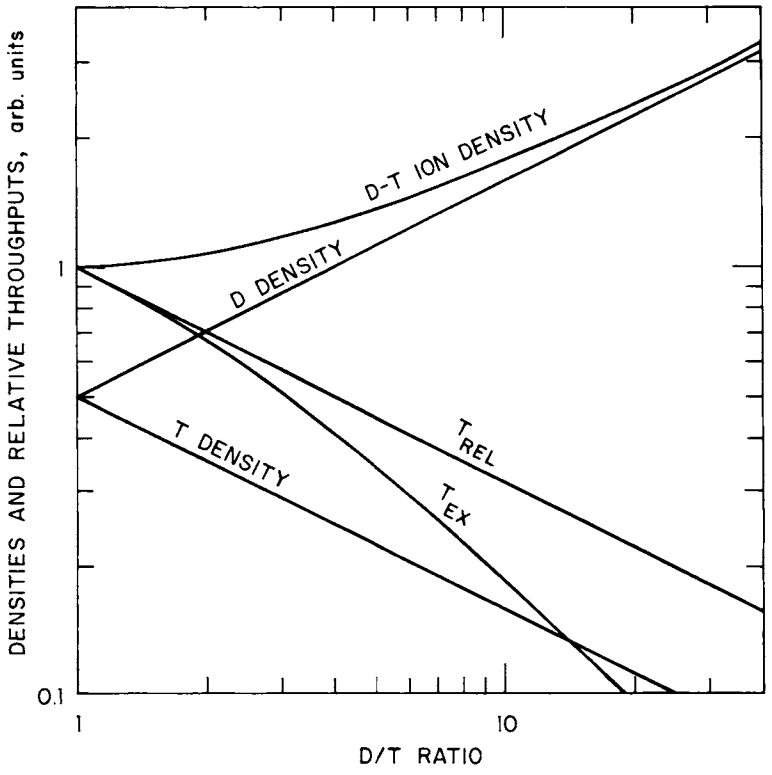

Figure 14-6. Dependence of the tritium throughput rate for a fixed fusion power on the ratio of the deuterium/tritium ion density.

These are presently designed as separate units but could be incorporated into the larger systems. The advantage of having a separate TPU system is that since most component failures will occur in these units they are easily accessible and easily removable for maintenance and repair.

The removal of condensible impurities, molecules containing I, N, O, C, etc, from the unburned fuel (DT) and the helium is the first operation performed at the fuel cleanup unit. The helium is then removed from the DT by means of a cryogenic stripping column. To minimize tritiated waste, the condensible impurities are processed. (The technology for this step is still under development. TSTA will incorporate getter beds into their design. The presence of iodine in the process stream may create problems which will be dealt with by modification of the FCU).

The basis of the isotopic separation system is cryogenic distillation. To fulfill STARFIRE requirements (≥ 90% D_2, ≥ 90% T_2; < 1% H_2 in either stream), the system consists of five distillation columns and two equilibrators. The three product streams consist of a 97% pure T_2 stream (3% D_2), 91% pure D_2 stream (9% T_2) and a waste protium/deuterium stream (57% H_2) containing a residual amount of tritium (0.2%).

Tritium is removed from the blanket as T_2O by means of a helium purge stream and recovered by collection on molecular sieves. The T_2O is passed through ion exchange columns to remove radioactive species other than tritium and then electrolyzed. The T_2/H_2 is passed through a palladium/silver diffuser in the hot cell before joining the main tritium processing stream at the fuel cleanup unit in the tritium facility.

14.4 Tritium in the Coolants

Tritium can potentially migrate into the primary coolant from the plasma through the first wall or from the blanket through coolant tubes, or it can be produced in the water from neutron reactions. Tritium can pass from the primary coolant to the secondary coolant by permeation or leakage. Because of "blow-downs", tritium in the secondary coolant is considered not recoverable and is assumed to be lost to the environment. Tritium transport in coolant circuits is discussed below.

The permeation of hydrogen isotopes through structural materials has been extensively studied at Argonne National Laboratory,[6-8] Oak Ridge National Laboratory,[9,10] and elsewhere.[11-13] At a given temperature, the permeation rate per unit area is proportional to the square root of pressure and inversely proportional to the wall thickness. Also, permeation is expected to be inversely proportional to the square root of the atomic mass. Thus, the permeation rate, ϕ, of T_2 through a membrane of area A, thickness t is given by:

$$\phi = \frac{1}{\sqrt{3}} K \left(\frac{A}{t}\right) \left(P_1^{1/2} - P_2^{1/2}\right) \qquad (1)$$

where P_1 = upstream pressure, and P_2 = downstream pressure. In general, the units of K are given as standard cc's of H_2 per unit time, per unit length,

per square root of pressure, e.g., cc(STP)/m•s•(kPa)$^{1/2}$. For fusion application it is convenient to use units of Ci/d•m•(Pa)$^{1/2}$. The conversion factor from cc(STP)/m•s•(kPa)$^{1/2}$ for H_2 to Ci/d•m•(Pa)$^{1/2}$ for T_2 is 4056. Selected data[6-13] for structural materials of interest are shown using the more convenient units in Fig. 14-7. Permeation rates into the primary coolant were calculated and are listed in Table 14-1. It was found that anticipated permeation rates are very small; all are less than 10 Ci/d.

For the first wall, another loss mechanism i.e., "insertion" may be more important than permeation for producing tritium migration into the coolant.

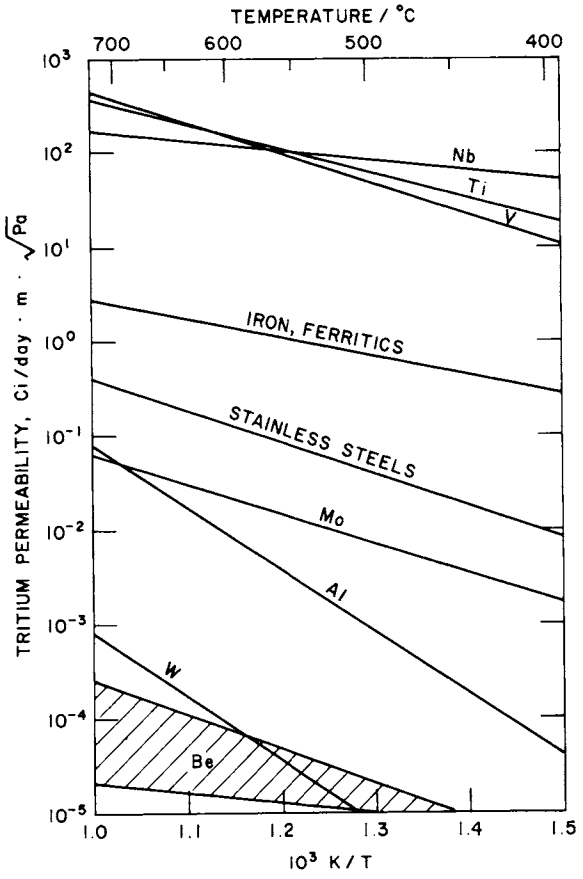

Figure 14-7. Tritium permeability of several materials as a function of temperature.

Table 14-1 Tritium Permeation Calculations

Source	Material	Temperature (K)	Pressure (Pa)	Area, A (m^2)	Thickness, t (mm)	Barrier	Permeation (Ci/d)
First Wall	Be[a]	773	1.3×10^{-3}	780	1.0	none	0.3
Limiter	Be	573	1.3×10^{-1}	100	1.0	none	0.035
Limiter	Ta[b]	573	1.3×10^{-2}	100	2.0	1000-X	5.5
Blanket	316-SS	773	1.3×10^{-7}	5760	1.5	150-X	0.09
Steam	Inconel	573	1.3×10^{-12}	5000	2.0	150-X	$< 10^{-4}$

[a]Be = beryllium, [b]Ta = tantalum

Table 14-2 Tritium "Insertion" Calculations for Beryllium

Source	Triton Flux (Ci/m^2-d)	Area, A (m^2)	Penetration, Depth, δ (μ)	Thickness, t (mm)	Barrier	Permeation, ϕ (Ci/d)
First wall	1.3×10^5	780	0.027	1.0	500-X	5.6
Limiter	7.2×10^5	100	0.050	1.0	500-X	7.2

Tritons striking the first wall implant to a certain depth. Assuming that permeation in any direction is inversely proportional to thickness, the fraction of tritons that enter the coolant is directly dependent on the depth of penetration via "insertion". Two important factors may reduce the "insertion" effect. First, the outer surface is likely to be highly damaged and therefore will have a high porosity. Thus, inserted tritons are more likely to return to the plasma. Second, the inside surface of the coolant tubes will be covered by an oxide film which acts as a permeation barrier, thus reducing the permeation typically by at least two orders of magnitude. The "barrier effectiveness" for STARFIRE is therefore assumed to be 500. Experimental results are required to verify the mitigating effect of both of these factors. The insertion calculations are summarized in Table 14-2. A minor source of tritium in the primary coolant ($\sim$ 1 Ci/d) is the lithium activation of the lithium hydroxide (LiOH) present as a corrosion inhibitor. The total tritium accumulation in the primary coolant is estimated at $\sim$ 10 Ci/d. Steady-state levels after 18 years of operation are $\sim$ 0.3 Ci/ℓ. The main tritium loss mechanism between the primary and secondary coolant is not permeation ($< 10^{-4}$ Ci/d - Table 14-1) but rather leakage across the steam generator. At tritium levels of $\sim$ 0.3 Ci/ℓ in the primary coolant, leakage rates < 30 ℓ/d are required to minimize the tritium released to the environment to < 10 Ci/d.

To ensure that tritium levels in the primary coolant are maintained at < 1 Ci/ℓ, a tritiated water recovery unit (TWRU) based on combined electrolysis/catalytic exchange (CECE) has been included in the reference STARFIRE tritium system design. Approximately 1% of the primary coolant, from which activated materials have been removed by means of ion-exchange units, is directed to the main tritium processing area (the tritium facility, see Sec. 14-6). There the HTO is converted to HT in the TWRU. The gas stream is then routed to the main fuel stream via the fuel cleanup unit.

14.5 Atmospheric Tritium Recovery (ATR) Scenarios

To minimize the effects of tritium upon the environment, the STARFIRE design has attempted to contain all tritium releases, whether due to normal leakage or to accidental releases within the confines of the plant. Several tools have been utilized to accomplish this goal. The outer walls of

potential tritium containing areas are lined with a tritium barrier (stainless steel or aluminum). The materials and equipment used in a tritium area are selected to minimize surface adsorption. Tritium areas are operated at reduced atmospheric pressure to minimize tritium out-leakage. The atmospheric tritium level (HTO) in all areas is maintained at < 5 $\mu Ci/m^3$. Tritium systems utilize triple containment where reasonable and practical; double containment is used throughout. The number and length of lines used to transport tritium between different buildings are minimized. The impact of a tritium release from the coolant system is minimized by: (1) maintaining the tritium inventory in the coolant at < 1 Ci/ℓ; (2) minimizing leaks in the primary coolant system; and (3) recovering all tritiated water and recycling it into the main fuel stream. Timely decontamination of potential tritium spills within containment is provided by: (1) dedicating an appropriately sized atmospheric tritium recovery unit (ATR) to each tritium containing area; and (2) interfacing the HVAC systems with the ATR systems to prevent a tritium release to the outside environment. Multiple, discrete flow paths between units are used to partition the tritium inventory and thus reduce the magnitude of a tritium release. The tritium waste generated is minimized by (1) processing tritiated water, (2) minimizing use of organics, (3) minimizing the contamination of organics where they are functionally necessary, (4) using all metal seals in valves, pumps, etc., and (5) reprocessing tritiated waste. Any waste generated within the plant is packaged in as small a volume as possible.

The tritium inventory in the plant is classified as either "vulnerable" or "non-vulnerable." (see Sec. 14-7) Before analyzing the effect of a possible tritium release, the magnitude of such a release has to be determined. This is done by postulating the failure of a component of any of the "vulnerable" systems. The following scenarios were identified: 1) the blanket purge stream ruptures and flows undetected for 10 minutes releasing 2 g of tritium; 2) malfunction of one of the 24 blanket recovery units would release $\sim$ 12 g of tritium; 3) a pump fails releasing all of its inventory (2.6 g); 4) failure of one of the fuelers would release 13 g of tritium. In the first two cases, the tritium is in the form T_2O; in the latter two, it is present as DT. Thus, the maximum release in the reactor hall or the hot cell is $\sim$ 10 g ($\sim 10^5$ Ci) of tritium in the form of T_2O. Both of these facilities are run under remote

operation, therefore, there is not a worker hazard during reactor operation in the event of a tritium release. However, the atmosphere after a release will be detritiated to ensure that the tritium does not enter the environment and that the tritium adsorption on exposed surfaces is minimized in these areas. To effect this, atmospheric tritium recovery systems based on a prototype at TSTA (Tritium Systems Test Assembly) are installed in both areas. The basic operation consists of the processing of the atmosphere by catalytic oxidation of tritium gas to T_2O followed by its absorption on molecular sieves. (The presence of a CO_2 environment will require a slight increase in the number of sieves used).[14]

To study the effect of tritium "soaking"[16] on the cleanup time, a parametric analysis was performed using the computer code TSOAK-M1[15] to determine the dependence of the cleanup time required after a tritium release on the following variables: 1) the rate of formation of HTO from T_2 or HT (RR); 2) the ratio between the rate of release of HTO from the surfaces within a building to the rate of adsorption onto the surfaces (REL/ADS); 3) the relative flow rate (F = percent of building volume per minute); 4) the building volume (V) and 5) the total surface area (S' or S) taken as two or four times the surface area of volume V. Reported values for the rate of formation of HTO from T_2 or HT varies from 10^{-5} to 10^{-15} $m^3/\mu Ci \cdot s$.[16-18] In Fig. 14-8, the residual tritium concentration ($\mu Ci/m^3$) is plotted as a function of the time after the tritium release for different values of RR; all other variables are fixed. If RR is $\leq 10^{-13}$ $m^3/\mu Ci \cdot s$, the time required to scrub the tritium from the building (i.e., to attain tritium levels ≤ 10 $\mu Ci/m^3$) is identical to that for the ideal case[16] (< 4 d when F = 0.2 Vol %/min and REL/ADS = 1). If RR is $\geq 10^{-9}$ $m^3/\mu Ci \cdot s$, the cleanup time increases to > 15 d due to the adsorption of HTO on the surfaces of the building. Thus, it is advantageous to design all tritium handling areas to minimize the rate of formation of HTO, i.e., to ensure small values of RR. However, additional experiments are needed to define the values of RR for materials which might be exposed to tritium in the fusion environment.

In the event of a tritium release involving HTO, the most important variable is the ratio between the rate of release and the rate of adsorption of HTO on the surfaces. The dependence of the residual tritium concentration on this ratio is shown in Fig. 14-9. When the ratio is < 1, the atmospheric tritium level remains elevated due to the large amount of

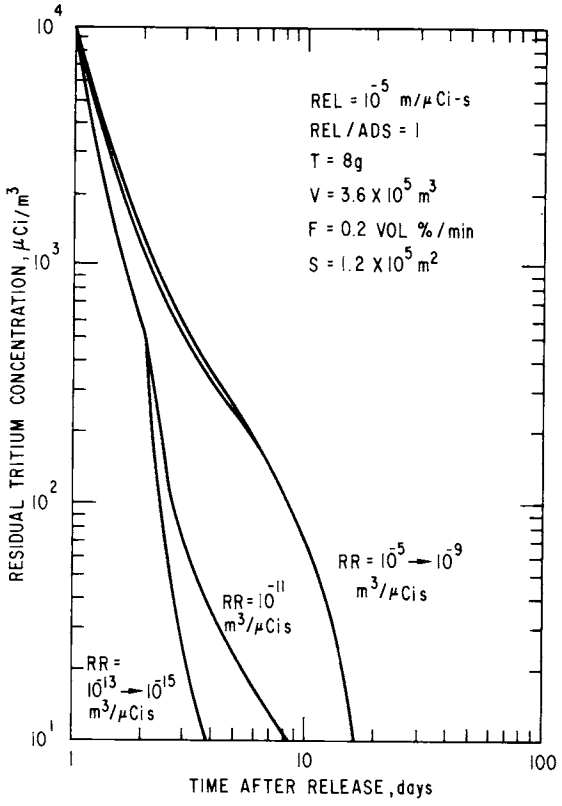

Figure 14-8. Dependence of tritium concentration after release on reaction rate of forming HTO.

tritium adsorbed on the surfaces as HTO. Even when REL/ADS = 1, the time required to attain levels < 10 $\mu Ci/m^3$ may be excessive. In Fig. 14-10, the effect of different HTO release rates for a fixed REL/ADS ratio of one is shown. At very low release rates, the surfaces become a permanent sink for the adsorbed tritium. To ensure the removal of tritium with the atmospheric recovery system, the tritium handling areas are designed with REL/ADS $\geq$ 1 and REL $\geq 10^{-4}$ m/s. This is achieved by using materials and equipment designed to minimize surface adsorption.

The effect of volume on the required cleanup time (Fig. 14-11) is minimal. Doubling the surface area ($S' \rightarrow S$) has a minimal impact on the tritium concentration after a release as is demonstrated in Figs. 14-12 and 14-13. A more

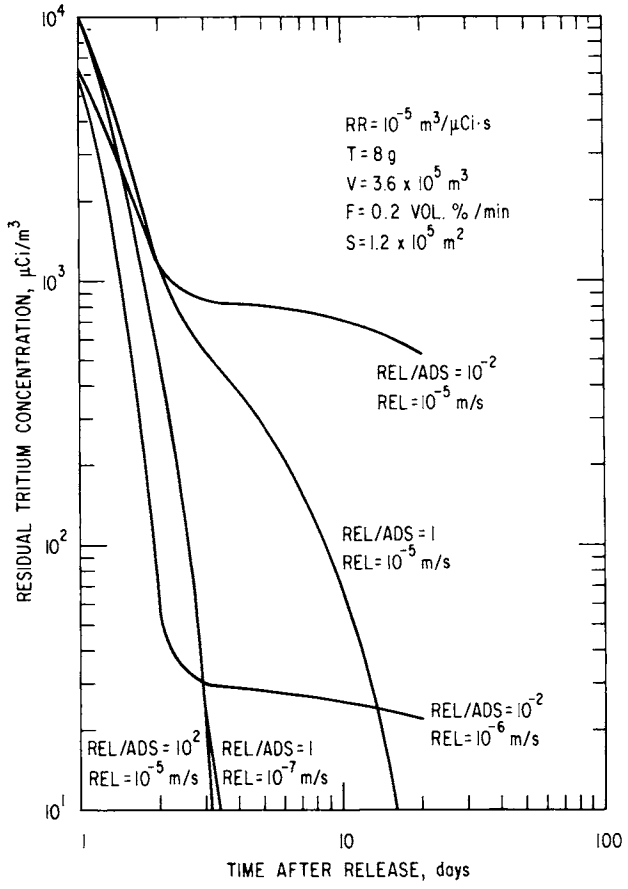

Figure 14-9. Dependence of tritium concentration after release on ratio between the rate of releasing HTO from surfaces and the rate of adsorbing HTO.

important parameter is the process flow rate (F) as shown in Figs. 14-21 and 14-13. With F = 0.5 Vol %/min; tritium levels are reduced below 100 $\mu Ci/m^3$ in $\sim$ 1 d; 3 - 5 d are required if F = 0.2 Vol %/min; and 10 d if F = 0.1 Vol %/min. For areas where personnel access is not required (reactor building, hot cell), process flow rates can be less than those where access is required (tritium facility). For STARFIRE, the ATR systems for the hot cell and the reactor building are designed with F = 0.2 Vol %/min; in the tritium facility the ATR is designed with F = 0.5 Vol %/min. In the latter area, workers wearing bubble suits can enter immediately after a tritium release.

The tritium released to the environment during the release scenarios postulated is minimal (< 12 Ci) because the cleanup is handled within the

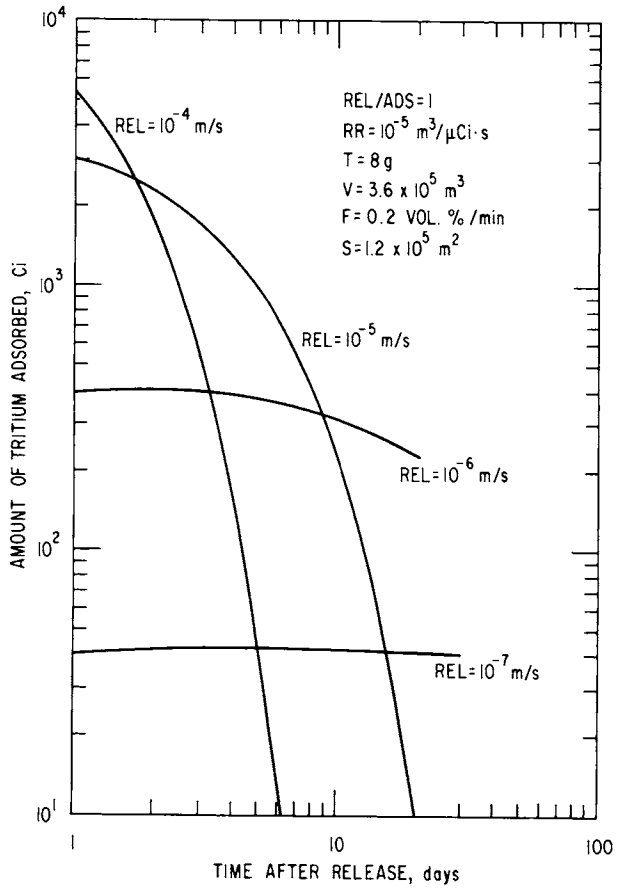

Figure 14-10. Dependence of adsorbed tritium concentration after release on different HTO release rates for REL/ADS = 1.

containment buildings. The CO_2 environment in the reactor building and in the hot cell eliminates most fire and explosion hazards. In the event of a simultaneous loss of coolant (LOCA) in one of the primary loops and a rupture of a tritium processing line in the reactor building, the following procedure will be followed to prevent swamping of the ATR units: 1) shutdown of the ventilation system; 2) collection of the condensed coolant in a floor tank; and 3) startup of the ATR $\sim$ 1 hour after the tritium release.

To minimize worker contact with tritium in the tritium facility, which is designed for contact maintenance, the following procedures are followed. Atmospheric levels are maintained at $< 5\ \mu Ci/m^3$. Permeation barriers are

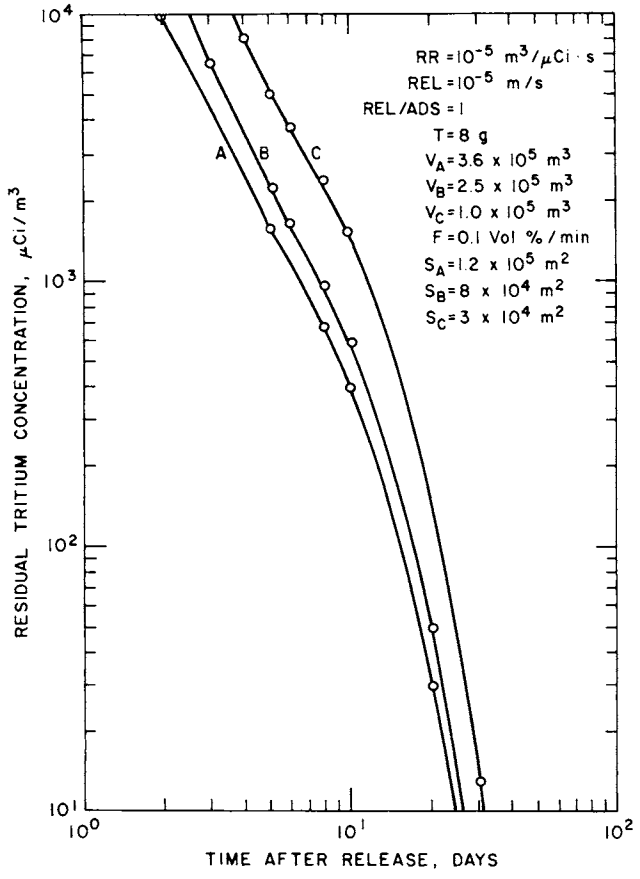

Figure 14-11. Dependence of tritium concentration after release on building volume.

utilized. Multilayer bubble suits with independent ventilation (permeation rate of 1.2×10^{-4} m^3/h)[19] are provided in case contact with uncontained tritium is required. A minimum tritium inventory is maintained in all systems, each of which has two levels of containment, with the building liner being the third. The tritium within these systems is considered to be relatively "non-vulnerable" (Sec. 14-7). However, an ATR with a flow rate of 0.5 Vol %/min (ideally capable of a 48 h cleanup) is dedicated to the tritium facility to ensure worker safety, minimize tritium leakage to the environment, and minimize tritium adsorption on internal surfaces. The operation of the ATR is as previously described except for the elimination of the 1 h delay in startup. Normal hydrogen fire prevention practices are exercised throughout the tritium facility.

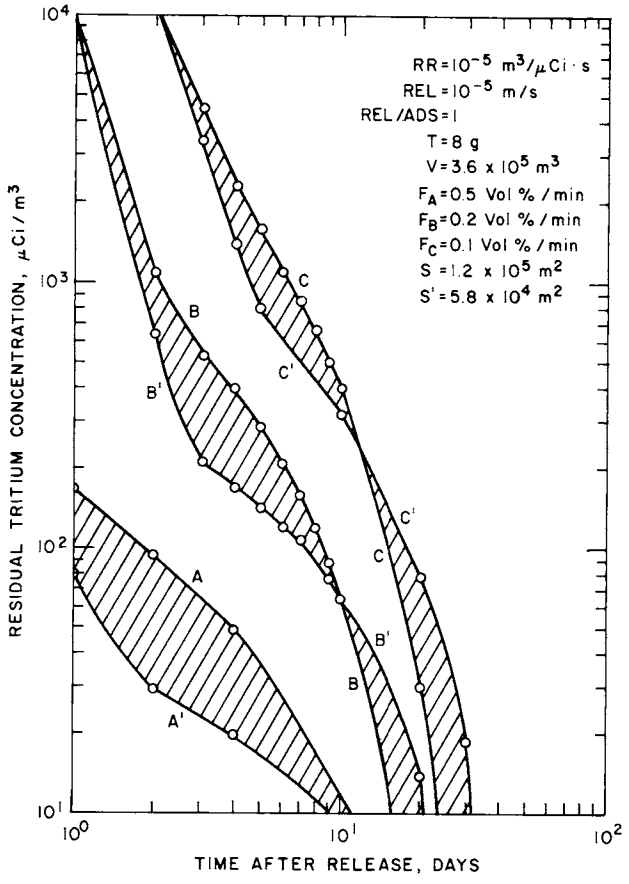

Figure 14-12. Dependence of tritium concentration after release on processing rates and surface areas exposed.

The maximum tritium release in a single failure of a "non-vulnerable" component is the 50 g in the ISS unit. Because the tritium is in the unoxidized form (a factor of 40 less toxic than the oxidized form) and because no worker is permitted in the vicinity of the operating ISS units without a bubble suit, the average dose received in the tritium facility (2×10^4 m^3- building volume) by an unsuited worker would be 1.9 rem/min after a 50 g release to T_2. With a suit, the dose would be 0.008 rem/h. Thus, with prompt response to tritium release alarms, no worker will be subjected to an excessive radiation dose (the present recommended yearly dose is 5 rem). The fire hazard from a 50 g release (0.2 m^3 at STP) is minimal; conversion to HTO under non-fire conditions will require more than an hour.

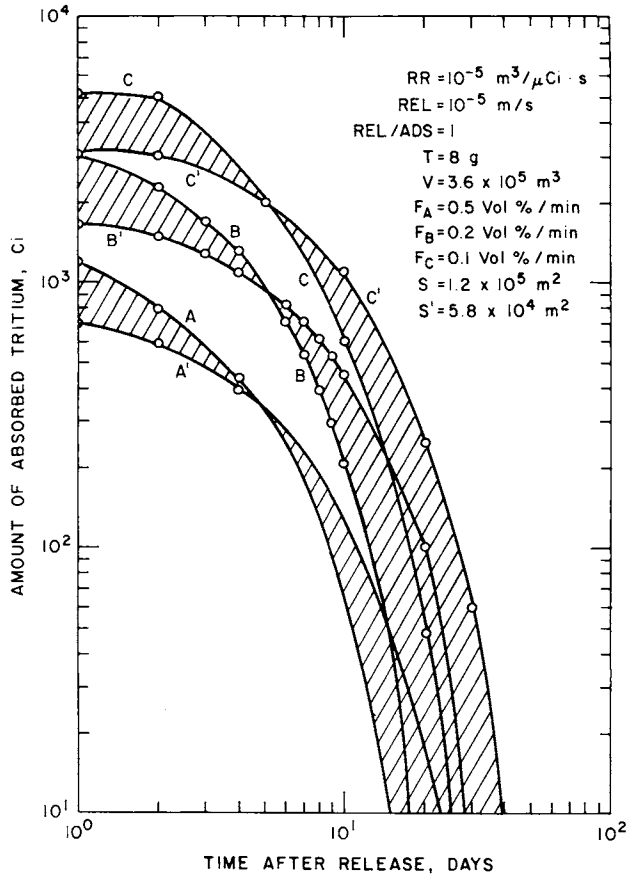

Figure 14-13. Dependence of adsorbed tritium concentration after release on processing rates and surface areas exposed.

The design goal for tritium release from the plant is less than 5000 Curies per year in all forms, (gas, liquid and solid waste) averaged over operating, standing and maintenance phases and including in-plant releases. The tritium loss due to building leakage will be < 1 Ci/d assuming a leakage rate of 3×10^{-5} Vol %/d and a tritium concentration of 5 $\mu Ci/m^3$ in the 4×10^5 m^3 of tritium containing volume. The packaged solid waste is assumed to contribute ∿ 1 Ci/d. Coolant losses through the steam generator will account for ∿ 10 Ci/d (Sec. 14.4). Five atmospheric turnovers per day in the tritium facility (2×10^4 m^3) expelled through an ∿ 100 m stack will account for < 1 Ci/d. The total release rate is ∿ 13 Ci/d. To reduce these releases, two routes are possible. The most productive is to reduce leakage across the steam

generators to the secondary coolant which will result in a reduction from 10 Ci/d to 1 - 3 Ci/d. The second is to minimize the number of atmospheric turnovers in the tritium facility.

Routine replacement of the blanket modules will release some tritium into the reactor building which will be processed by the ATR units. An estimate of the magnitude of this release was obtained using the permeation data in Sec. 14-4. At an average temperature of 673 K (arising from the afterheat), < 10 Ci/d will be lost from the beryllium surfaces and < 30 Ci/d from the stainless steel surfaces to the reactor building atmosphere.

14.6 Tritium Facility

The tritium facility is a completely separate building from the reactor building but is located nearby to minimize the length of the tritium feed-lines and thus to reduce the tritium accident potential. The building is designed for contact maintenance, having an air environment and being free of gamma and neutron radiation. All tritium handling units are under remote, independent (hard-wire) computer control; the computer is equipped with an uninterruptible power supply to ensure that all tritium systems can be shut-down in the event of a power failure. The tritium storage area is located in the tritium facility. It consists of a shielded barricaded vault in which an inert cover gas is used for fire protection. Because of space and safety benefits, the majority of the tritium is stored as UT_X; but some low-pressure gaseous storage in tanks is also provided. The tritium processing units are based on prototypes being tested at TSTA,[5] and they are of modular design to facilitate replacement. Multiple units are provided and full redunancy is built into the tritium facility to ensure maximum reliability and availability. The primary containment systems are metal (no elastomers). An inerted, dry atmosphere glove box is the secondary containment for most components. Double wall piping is used between units. The dimensions of individual components are found in Table 14-3.

The layout of the two levels of the tritium facility is shown in Fig. 14-14 and 14-15. The building is divided into two main sections. The tritium processing section is 30 m x 40 m; within it a slightly negative

pressure is maintained by a self-contained HVAC system interfaced to the ATR system to minimize tritium out-leakage. The first level in this section is 6 m high, the second level is 12 m high (6 m of which is dedicated to crane operation.) The control section is 30 m x 10 m x ∿ 8 m high; a slightly positive pressure is maintained by a separate HVAC system to prevent tritium in-leakage. Within this latter section are found the tritium facility control

Table 5. Tritium Facility Components

Component	Abbreviation	Dimensions(m)	Volume(m^3)
Atmospheric Tritium Recovery Unit	ATR	6.25 x 8 x 5 (1 unit)	2500 (10 units)
Isotope Separation System	ISS	3 x 3 x 12	108
Fuel Cleanup Unit	FCU	6 x 2 x 2	24
Tritium Waste Treatment	TWT	5 x 5 x 5	125
Solid Waste Disposal	SWD	5 x 5 x 4	100
Transfer Pump Unit	TPU	4 x 1 x 2	8
Tritium Storage		8 x 4 x 2	64
Tritiated Water Recovery Unit	TWRU	6 x 9 x 3 3 x 4 x 3	162 36
Fuel Blender Unit	FBU	4 x 1 x 2	8

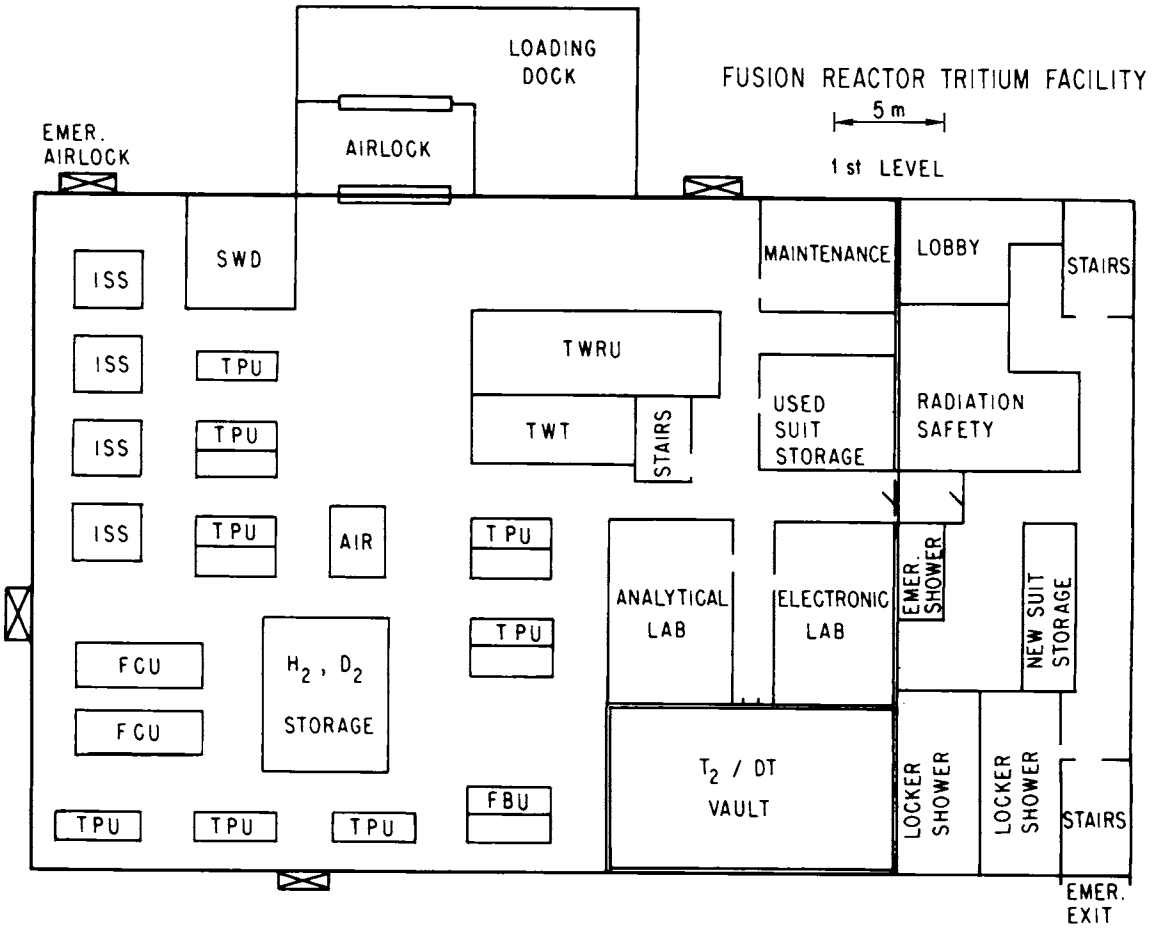

Figure 14-14. First level of tritium facility.

room, offices for the supervisory personnel, the locker/shower area, the radiation safety office, tritium bubble suits not yet in use and the main entrance to the building. The control room contains the control units for all tritium processing systems and the tritium monitor readouts for the tritium facility, the reactor building and the hot cell. The latter are used to detect small leaks in any of the tritium systems. There are several personnel airlocks into the tritium processing section; the one designed for routine use connects the locker/shower area and the tritium section. The others are intended for emergency use. Within the tritium processing area, 25% of the available volume is occupied by the ATR and the interfaced HVAC system. The placement of all units is designed to provide good accessibility with a remotely operated crane. The TWRU, TWT and SWD units which generate

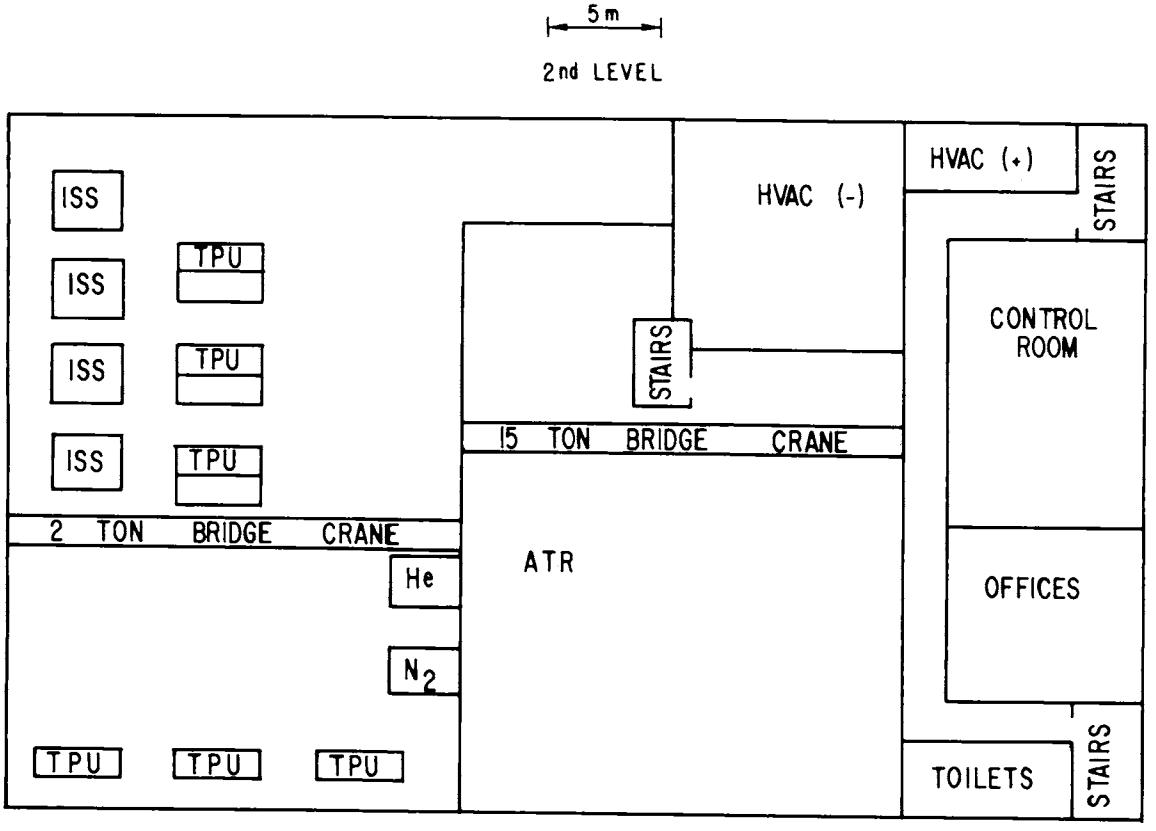

Figure 14-15. Second level of tritium facility.

and/or process tritiated waste are located near the dock to provide easy waste removal. The dock itself is located outside the building to ensure that the tritium liner within the tritium facility is completely sealed. Four ISS and four FCU units are provided for redundancy, only two sets are on-steam at any one time. The ISS units are 6 m high; the 6 m high vacuum shell around each unit is removed vertically. (Space on the second level is provided). The TPU units which regulate the gas flow through the tritium facility are stacked in two tiers per level. Piping joining all units is not shown. Storage space is provided for non-tritiated gaseous deuterium and hydrogen as well as helium and nitrogen. Within the tritium area are three service areas. The first is an analytical laboratory for doing routine analyses on catalysts, molecular sieves, etc; the second is an electronics laboratory in which non-activated tritium monitors are serviced and tested; the third is a maintenance area where tritium units are repaired. A storage/cleaning area for used bubble suits is also provided.

14.7 Tritium Reference Parameters

The reference STARFIRE tritium parameters are listed in Table 14-4 and the tritium inventory in Table 14-5. The designation "vulnerable" or "non-vulnerable" refers to the degree of control which can be enforced on the associated system. The ∿ 10 kg of tritium sited in the blanket is relatively immobile since it is in the oxide form and tenaciously retained by the solid breeding material. The tritium in storage, ∿ 1 kg, in the form of small units of UT_x (each containing ∿ 12 g of tritium), is located in a barricaded vault with an inert cover gas for fire protectipn; thus making it relatively "non-vulnerable" to accident. The fuel processing systems in the tritium facility contain ∿ 154 g of tritium in the unoxidized form (T_2, DT, HT) distributed as follows: 50 g in each of two ISS units, 15 g in each of two FCU units and ∿ 3 g in four different surge tanks used to ensure uniform flow throughout the plant. Each tritium processing unit is doubly contained and under monitor control to ensure maximum accident protection. Vacuum or an inert cover gas is present to reduce the fire hazard. The ISS units which contain the highest tritium inventory (∿ 50 g as T_2) have high reliability with no vessel failure being experienced in prototype units. The tritium in the fuel handling systems (vacuum pumps, fueling units, breeder tritium recovery unit) in the reactor building is considered to be "vulnerable" since the reactor area is subjected to severe thermal, magnetic and radiation loads which may interfere with a unit's function or may accelerate its aging.

At initial plant startup, ∿ 10 kg of tritium will be supplied from off-site. This tritium will later be recovered from the breeder blanket.

14.8 Conclusions

The tritium systems have been designed to achieve a minimum inventory in the plant, minimum tritium release to the environment, minimum worker exposure, minimum solid waste, and maximum availability and reliability. The STARFIRE tritium facility based on TSTA prototypes is a full-scale processing plant with high reliability. The effects of a tritium release have been modeled and indicate the importance of different parameters, the most signi-

Table 14-4. Reference STARFIRE Tritium Parameters

Plasma Parameters	
Plant Availability	0.75
Thermal Power (MW)	4000
Energy Per Fusion (pJ)	3.22
Ion Density (ions/m^3)	8.06×10^{19}
Plasma Volume (m^3)	783
Particle Confinement Time (s)	1.8
Reflection Coefficient	0.9
Fractional Burnup	0.42
Tritium Mass Flow Rates (g/d)	
Tritium Burnup	536
Tritium Fueled	1296
Tritium Exhausted	760
Tritium Bred	562
Deuterium Mass Flow Rates (g/d)	
Deuterium Burned	360
Deuterium Fueled	865
Impurity Mass Flow Rates (g/d)	
Helium Exhaust	712
Iodine Exhaust	$\sim$ 50
Protium Exhaust	$\sim$ 10
Carbon Exhaust	$\sim$ 10
Nitrogen Exhaust	$\sim$ 10
Oxygen Exhaust	$\sim$ 10

ficant being the flow velocity and the ratio of the rate of HTO adsorption to the rate of its release. The coolant is the primary source of release of tritium from the plant.

Table 14-5 STARFIRE Tritium Inventory

Tritium System	"Vulnerable" (g)	"Non-vulnerable" (g)
Solid Breeder Blanket	—	∿ 10,000
Blanket Purge Stream	0.2	—
Blanket Tritium Recovery	281	—
Vacuum Pumps	63	—
Fueling	54	—
Fuel Processing	—	154
Storage	—	1071
Total	398	∿ 11,225

References

1. R. G. Clemmer, E. M. Larsen, and L. J. Wittenberg, "Tritium Handling, Breeding, and Containment in Two Conceptual Fusion Reactor Designs: UWMAK-II and UWMAK-III," Nucl. Eng. and Design, 39, 85 (1976).

2. L. J. Wittenberg, J. C. Bixel, J. D. Braun, D. L. Hobrock, C. J. Kershner, J. C. Miles, T. B. Rhinehammer, R. A. Watkins, and W. R. Wilkes "Evaluation Study of the Tritium Handling Requirements of a Tokamak Experimental Power Reactor," Mound Laboratory, MLM-2259, November 1975.

3. T. R. Galloway, "Tritium Management in Fusion Reactors," Proc. Third ANS Topical Meeting on the Technology of Controlled Nuclear Fusion USDOE Report, CONF-780508, (1978) p. 910 and references therein.

4. J. M. Mintz, R. G. Clemmer, and V. A. Maroni, "Tritium Handling System Trade Studies and Design Options for the GA/ANL TNS," Proc. of Seventh Symposium on Engineering Problems of Fusion Research, October 25-28, 1977, Knoxville, Tennessee.

5. J. L. Anderson and R. H. Sherman, "Tritium System Test Assembly Design for Major Tritium Device Fabrication Review," Los Alamos Scientific Laboratory Report LA-6855-P (1977).

6. V. A. Maroni, "Control of Tritium Permeation Through Fusion Reactor Structural Materials," Proc. DOE Environmental Control Symp., Nov. 28-30, 1978, Washington, D.C., and references therein.

7. V. A. Maroni, "Materials Considerations in Tritium Handling Systems," Proc. First Topical Meeting on Fusion Reactor Materials, January 29-31, 1979, Miami, Florida, and references therein.

8. T. A. Renner and D. J. Raue "Tritium Permeation Through Fe-2-1/4Cr-1 Mo Steam Generator Material," Nucl. Technol. 42, 312 (1979).

9. J. T. Bell and J. D. Redman, "Tritium Permeation Through Incoloy 800 Oxidized In-Situ", Proc. Third Topical Meeting on the Technology of Controlled Nuclear Fusion, USDOE Report CONF-780508, (1978) p. 757.

10. J. T. Bell, J. D. Redman, R. A. Strehlow, and F. J. Smith, "Tritium Permeation Through Steam Generator Materials", Proc. International Conference on Radiation Effects and Tritium Technology for Fusion Reactors, USERDA Report CONF-750989 (1976) p. IV-317.

11. R. E. Stickney, "Diffusion and Permeation of Hydrogen Isotopes in Fusion Reactors," The Chemistry of Fusion Technology, D. M. Gruen, ed. (Plenum Press, New York, NY, 1972) p. 241.

12. R. W. Webb, "Permeation of Hydrogen Through Metals," USAEC Report NAA-SR-10462 (1965).

13. T. R. Galloway, "Tritium Management in Fusion Synfuel Designs," Proc. of Tritium Technology in Fission, Fusion and Isotopic Applications USDOE Report, CONF-800427, (1980) p. 308.

14. Personal communication, Linde Co.

15. R. H. Land, V. A. Maroni and M. Minkoff, "TSOAK-M1: A Computer Code to Determine Tritium Reaction/Adsorption/Release Parameters from Experimental Results of Air-Detritiation Tests," Argonne National Laboratory, ANL-79-82 (1980).

16. R. G. Clemmer, R. H. Land, V. A. Maroni and J. M. Mintz, "Simulation of Large-Scale Air Detritiation Operations By Computer Modeling and Bench-Scale Experimentation," Argonne National Laboratory, ANL/FPP-77-3, (1977).

17. G. J. Cassaletto, L. H. Gevantman, and J. B. Nash, "The Self-Radiation Oxidiation of Tritium in Oxygen and Air," U. S. Naval Radiological Defense Laboratory Report, US-NRDL-UR-565 (May, 1962).

18. J. D. Eakins and W. P. Hutchinson, "The Radiological Hazard from the Conversion of Tritium, to Tritiated Water in Air by Metal Catalysts," Tritium, A. A. Moghissi and M. W. Carter, eds (Messenger Graphics, Phoenix, Arizona, 1973).

19. R. V. Osborne, "Absorption of Tritiated Water Vapor by People," Health Physics 12, 1527 (1966).

The authors wish to acknowledge with appreciation the helpful assistance and information supplied by the personnel at TSTA/LASL (J. L. Anderson, D. O. Coffin, R. H. Sherman, J. Bartlitt, F. Damiano, R. Jalbert) and also J. Crocker, V. A. Maroni, W. R. Wilkes, L. J. Wittenberg, M. Rodgers, T. R. Galloway, J. M. Mintz, and H. Garber.

Table of Contents

		Page
15.1	INTRODUCTION AND GENERAL SEQUENCE OF OPERATION	15-1
15.2	TOROIDAL FIELD COIL POWER SYSTEM	15-2
15.3	CORRECTION FIELD COIL POWER SYSTEM	15-3
15.4	EQUILIBRIUM FIELD COIL POWER SYSTEMS	15-6
15.5	OHMIC HEATING COIL POWER SYSTEM	15-7
15.6	ELECTRON-CYCLOTRON-RESONANCE-HEATING SYSTEM	15-9
15.7	LOWER HYBRID RADIO-FREQUENCY HEATING POWER SYSTEM	15-9

List of Figures

Number		Page
15-1	TF-magnet operating/protection circuit	15-3
15-2	Typical CF coil power supply	15-4
15-3	Ohmic heating coil power system	15-8

List of Tables

Number		Page
15-1	Load and Power System Requirements for TF Power System	15-2
15-2	Load and Power System Requirements for CF Power Supply	15-5
15-3	Load and Power System Requirements for EF Coils	15-7

15.1 INTRODUCTION AND GENERAL SEQUENCE OF OPERATION

The choice of a steady state mode of operation has substantially impacted the characteristics and reduced the cost of the electrical storage systems and power supplies for STARFIRE. The power system equipment for STARFIRE is, in general, within the present state of the art of technology or the technology currently being developed (such as the Gyrotrons for the radio-frequency systems). The energy for the operation of the STARFIRE power system is derived directly from the local power grid - that is, there is no intermediate mechanical energy storage system. There is, however, some capacitive and possibly some inductive (superconducting coil) energy storage that would be used in conjunction with the power supply for the correction field (CF) coils.

The general sequence of operation of the power system is as follows:

1. Approximately 12 h before plasma startup, the superconducting toroidal field (TF) coils are energized by a constant 100 volt power supply and the toroidal field current starts increasing to its maximum value of 24 kiloamperes.

2. Approximately 20 min. prior to plasma startup, the super-conducting ohmic heating (OH) coils are energized by a constant 12 volt power supply and the ohmic heating coil current increases to its maximum value of 200 kiloamperes. (100 kiloamperes in each of two parallel circuits).

3. Approximately ten min. prior to plasma startup, the storage device for the correction field coils is charged to 20 megajoules, about 1/2 of its storage capability. This is probably a capacitor bank in order to maximize the rate of energy exchange between the coils and the storage device; however, it could be a combination of capacitive and inductive energy storage to minimize the total volume, or possibly a superconducting coil with a solid state dc-ac-dc converter system.

4. At t = 0, the power supply charging the ohmic heating coils is inverted, and the current is transferred to the diode-variable

resistor leg connected in parallel with the ohmic heating coils. The voltage across the ohmic heating coils is maintained at 815 volts by varying the resistance value from 4 milliohms to 85 milliohms as the current decays.

5. At t = 0, the electron-cyclotron resonance heating (ECRH) system, the equilibrium field coils and the correction field coils are all energized according to the plasma requirements.

6. At t = 5 sec., plasma heating is transferred from the electron cyclotron resonance heating system to the lower hybrid radio frequency heating (LHRF) system.

15.2 TOROIDAL FIELD COIL POWER SYSTEM

The toroidal field coils consist of twelve superconducting coils interconnected with normal temperature bus. In series with each of the twelve superconducting coils is a "Dump Resistor" which is shorted with a "Dump Switch". The function of the toroidal field coil power supply is to charge the toroidal field coils and to compensate for the power losses in the normal temperature, current conducting devices which make up the interconnections between superconducting coils.

The load and power system requirements are shown in Table 15-1.

Table 15-1. Load and Power System Requirements for TF Power System

Coil Inductance	174 H
Coil Current	24 kA
Coil Stored Energy	50×10^9 J
Current Regulation	1%
Charging Voltage	100 V
Charging Time	12 h
Input Power	3.2 MVA
Primary Voltage	13.8 kV
Power Supply Dimensions	3 m x 6 m x 2.5 m High
Dump Resistance (Each)	0.1 ohm
Dump Resistor Volume (Each)	2.5 m x 2.5 m x 2.5 m

The power supply has a free-wheeling diode connected across the output. Fig. 15-1 illustrates the TF power system.

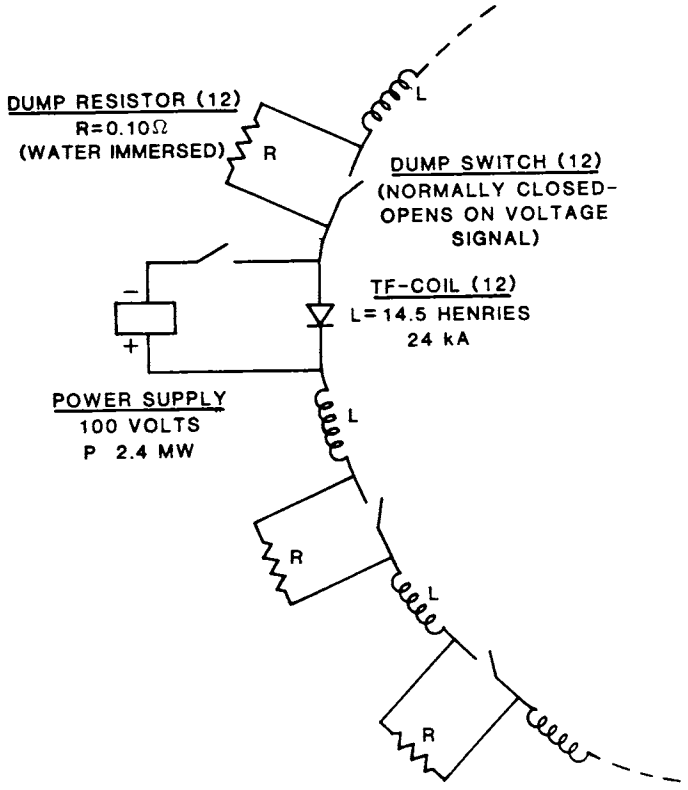

Figure 15-1. TF-magnet operating/protection circuit.

The power supply, the buswork between the power supply and the toroidal field coils, and the free-wheeling diode are all water cooled.

Normal protection is provided for the power supply and includes over-current, loss of phase, shorted thyristors, etc. In the event of a fault condition in a superconducting coil, the dump switches are opened and the coil energy is dissipated in the dump resistors with a L/R time of 45 sec. The dc switches open against a voltage of 2.4 kV.

15.3 CORRECTION FIELD COIL POWER SYSTEM

The correction field coils correct displacements of the plasma. The CF coils are normal temperature coils shown in Fig. 9-30 and can be considered as four separate coil-power supply systems:

Coils #8, above and below the midplane require 20 kiloamperes each and each has an inductance of 2.2 millihenry. Coils #9 require 40 kiloamperes each and each has an inductance of 5.6 millihenry. The charging time of the coils is less than 50 milliseconds.

The requirement of varying the current in the CF coils can be accomplished in several ways. One approach would be to use a four quadrant converter; however this method would imply transferring large blocks of power between the power grid and the coils.

The method proposed for STARFIRE is the utilization of a common electrical energy storage system using capacitors. Energy would be transferred between each CF coil and the common energy storage device, via a dc-ac-dc converter system. It may be possible to minimize the volume of the storage capacitor by providing some superconducting coil (inductive) energy storage. Figure 15-2 shows a typical CF coil power system.

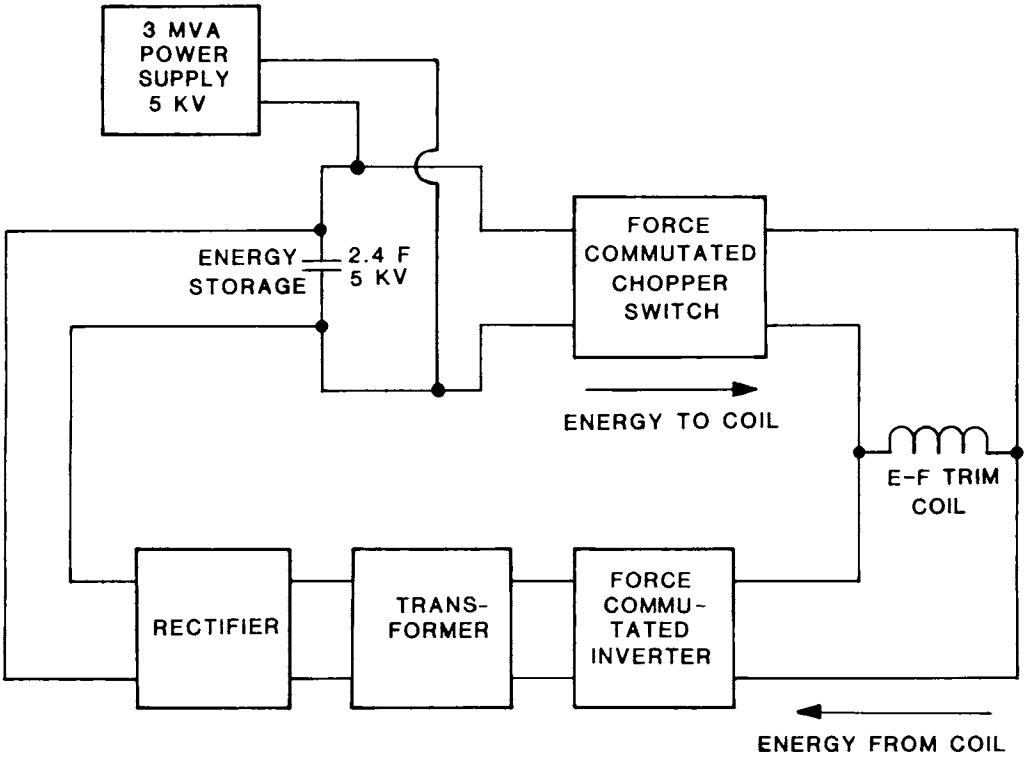

Figure 15-2. Typical CF coil power supply.

A power supply provides the energy lost in the normal temperature coils, the bus work, the thyristors, etc.

The load and power system requirements are shown in Table 15-2.

Table 15-2. Load and Power System Requirements for CF Power System

Coil Inductance - #8 (Each)	2.2 mH
Coil Inductance - #9 (Each)	5.6 mH
Coil Current - #8	20 kA
Coil Current - #9	40 kA
Coil Charging Time (all coils)	300 ms
Coil Stored Energy - #8 (Each)	0.44 MJ
Coil Stored Energy - #9 (Each)	4.48 MJ
Total Coil Stored Energy	9.84 MJ
Assumed Coil Resistance - #8 (Each)	0.5 mohm
Assumed Coil Resistance - #9 (Each)	0.25 mohm
Assume Bus Resistance	Equal to Coil Resistance
Energy Storage Capacity	10 MJ
Converter - Inverter Capacity - #8 Total	33 MW
Power Supply	3 MVA
Power Supply Voltage	833 V
Primary Voltage	13.8 kV
Volume - Converter-Invertor - #8 (Each)	3 m x 6 m x 3 m
Volume - Converter-Invertor - #9 (Each)	12 m x 6 m x 3 m
Volume - Energy Storage Device	6 m x 6 m x 6 m
Volume - Power Supply	3 m x 3 m x 3 m

Normal protection is provided for the power supply, the converter-inverters, and the energy storage capacitor bank. This includes protection from over-current, shorted thyristors, fused capacitors, etc. If a supplementary superconducting coil is used, a dump circuit will be provided as protection in the event of coil failure.

The power requirements for the CF power system are based on a blanket L/R time constant of 300 milliseconds. If this time constant were only 50 milliseconds, the power requirements of the Converter-Inverter would be increased by a factor of six. The costs for these systems would also be increased by a factor of six.

15.4 EQUILIBRIUM FIELD COIL POWER SYSTEMS

The equilibrium field coils are a system of superconducting coils with an inductance of 0.5 henry. These 200 kiloamp coils have a di/dt requirement of 2834 amperes per second, which dictates a power supply voltage of 1417 volts. Current and voltage profiles during startup are given in Chapter 6.

In the event of an emergency shut-down, the energy will be removed from the equilibrium field coils in about 2.5 sec. A modified Dump Circuit is proposed, so as to limit the voltage across the coil to 85 kV. As the current drops, the dump resistance is increased from 0 ohm to 0.8 ohms, reducing the current in the equilibrium field coils in the desired manner, to control the plasma during shutdown. A form of liquid rheostat is proposed to provide the variable resistance and to absorb the energy stored in the coil. The dump switch, which now must open against 85 kV (compared to 2.4 kV for the toroidal field circuit) will now require a commutating circuit to generate a current zero. With current development of thyristor switches, it is expected that the dump switch would be a thyristor (solid state) switch.

The power supply has a free-wheeling diode connected across the power supply output terminals.

The load and power system requirements are shown in Table 15-3.

Table 15-3. Load and Power System Requirements For EF coils.

Coil Inductance	0.5 H
Coil Current	200 kA
Required Max Coil di/dt	2834 A/s
Coil Stored Energy	10×10^9 J
Power Supply Voltage	1417 V
Input Power	100 MW
Power Supply Capability	290 MVA
Input Voltage	13.8 kV
Dump Resistance	0.0 to 0.8 ohms
Commutated Dump Switch	6 m x 12 m x 3 m
Power Supply Volume	18 m x 36 m x 6 m
Dump Resistor	5 m x 2.5 m x 2.5 m

Standard protection schemes are used for the power supply equipment. The use of a commutated, 85 kV thyristor switch implies additional circuitry to insure that the switch is in a "charged" or ready condition. The power supply will have the normal complement of protection for safe operation, and includes loss of phase protection, failed-thyristor protection, over current protection, etc.

15.5 OHMIC HEATING COIL POWER SYSTEM

The ohmic heating coils are utilized only during the start-up phase of operation. These are a system of superconducting coils with an inductance of 55 millihenries and a rated current of 200 kiloamperes. In parallel with the superconducting coil is a series combination of a diode and an adjustable resistor. The diode is connected so as to block current during the charging period of the coil. A 12 volt power supply, with series blocking diodes in the bus from the power supply, is connected across the ohmic heating coils. Figure 15-3 illustrates the proposed ohmic heating coil system.

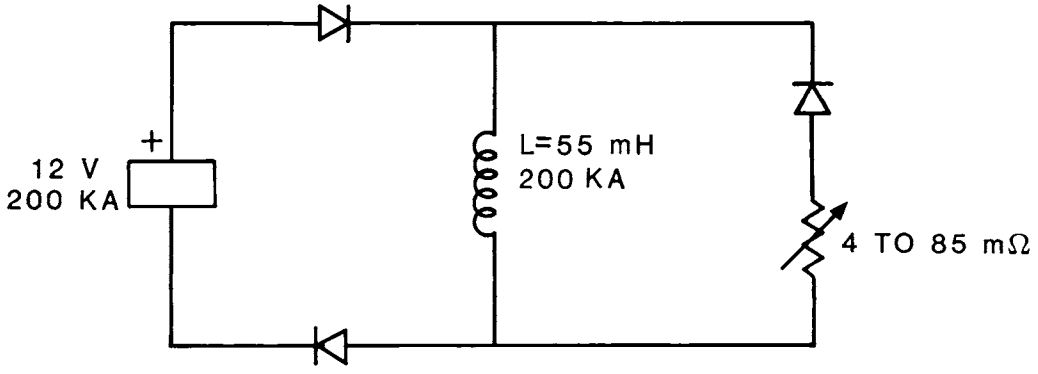

Figure 15-3. Ohmic heating coil power system.

The adjustable resistor consists of several servo driven liquid rheostats, capable of a total resistance change from 4 milliohms to 85 milliohms in approximately 10 sec. The liquid rheostats are capable of absorbing the full 1.1×10^9 joules stored in the ohmic heating coil.

The use of blocking diodes in series with the 12 volt, 200 kiloamperes power supply protects the 100 volt power supply from the coil reverse voltage and eliminates the necessity of mechanical switches to perform this function. Considering the rate at which the cost of solid state devices is being reduced, this seems to be the most cost effective design option.

The adjustable resistor and the series diode would also provide protection in the event of a coil fault.

The adjustable resistor (liquid rheostat) is controlled by a closed loop servo system and adjusted to maintain a constant 815 volts across the ohmic heating coils as the coil current decays.

The load and power system requirements are the following:

Coil Inductance	55 mH
Coil Current	200 kA
Coil Stored Energy	1.1×10^9 J
Charging Voltage	12 V
Input Power	3.2 MVA
Primary Voltage	13.8 kV
Power Supply Dimensions	3 m x 6 m x 2.5 m

Liquid Rheostat Resistance	4 to 85 mohm
Liquid Rheostat Travel Time	10 s
Liquid Rheostat Dimensions	1.5 m x 1.5 m x 1.5 m

Standard protection practices are used to protect the power supply and the superconducting coils. The adjustable resistor, in the minimum resistance configuration, protects the system against coil faults. The power supply has a standard protection for over-current, failed thyristor, loss of phase, etc.

15.6 ELECTRON-CYCLOTRON-RESONANCE-HEATING SYSTEM

Electron-cyclotron-resonance-heating (ECRH) is used for five sec. during the initial phase of plasma startup. This high-frequency heating, at 160 GHz, requires a beam supply of approximately 14.4 MW of 100 kV dc power and approximately 2 MW of power for the heaters magnet supplies, gun supplies, etc. for a total of 16.4 MW.

At the end of the five sec. ECRH period, the lower hybrid radio-frequency heating system is engaged.

Standard protection techniques are used for the gyrotrons; these include over-current protection and fast crowbar systems.

The requirements for the ECRH system are:

Input Power at 13.8 Kilovolts	15 MW
Input Power at 480 Volts	2 MW
Outdoor Substation for High Voltage Power Supply	20 m x 30 m
Indoor Volume for rf System	30 m x 30 m x 3 m

15.7 LOWER HYBRID RADIO-FREQUENCY HEATING POWER SYSTEM

The lower hybrid radio-frequency heating system operates at 1.67 GHz. This system provides the basic plasma heating for STARFIRE. The linear-beam tubes used in this application can be constructed to be 0% efficient - that is, the output power can be reduced to zero with no change in input power. The

tube cooling system will be designed to accommodate this feature. This quick shutdown (less than 1/2 sec.) would be utilized in the event of a plasma disruption when it is desired to resume plasma heating in a short period, without a power grid perturbation that might result in line "flicker".

The following are the basic power requirements for the rf System:

Power Required	152.7 MW
Primary Voltage	13.8 kV
Substation Area	250 m^2
rf System Volume (power supply, tubes, circulators, phase shifters, waveguide; exclusive of access area)	1600 m^3

Table of Contents

		Page
16.1	INTRODUCTION AND SUMMARY	16-1
16.2	DESIGN CONSIDERATIONS	16-4
16.2.1	Design Philosophy and Approach	16-4
16.2.2	Design Requirements and Constraints	16-5
16.3	SUPPORT STRUCTURE REFERENCE DESIGN	16-7
16.3.1	TF Coil Vacuum Tank	16-10
16.3.2	Anti-Torque Panel	16-14
16.3.3	Centerpost	16-17
16.3.4	Common Dewar	16-18
16.3.5	Thermal Isolation Struts	16-19
16.3.6	Upper and Lower Vacuum Pump Support Assemblies	16-20
16.3.7	Blanket/Shield Support Pedestals	16-21
16.3.8	EF Coil Vacuum Tanks and Supporting Structure	16-22
16.4	STRUCTURAL ANALYSES	16-23
16.4.1	TF Coil Structure Analysis	16-24
16.4.2	Worst-Case Magnet Accident Evaluation	16-31
16.4.3	Seismic Analysis	16-33

List of Figures

Number		Page
16-1	STARFIRE reactor support structure system	16-2
16-2	Alternate support structure system concepts	16-9
16-3	TF coil structural configuration	16-12
16-4	Steel brace frame concept	16-15
16-5	Finite element model of STARFIRE structure	16-25
16-6	Structure deflections about horizontal centerline . . .	16-26
16-7	Structure deflections about vertical centerline	16-26
16-8	Out-of-plane deflections for TF coil helium vessel and vacuum tank	16-28
16-9	Conceptual design of optional stiffening plates	16-29
16-10	Distribution of stresses around TF coil vacuum tank	16-30
16-11	Out-of-plane forces on TF coils adjacent to faulted coil	16-32

List of Tables

Number		Page
16-1	Primary Design Requirements, Guidelines and Constraints for the Reactor Support Structure System	16-5
16-2	Component Materials and Weights	16-11
16-3	Structural Properties of Materials in Support Structure System	16-11

16.1 INTRODUCTION AND SUMMARY

The support structure system for a tokamak power reactor is an important element of the overall reactor design. Although it is not actively involved in performing any of the reactor's functions, the support structure must be designed as a complete system and integrated into the overall reactor configuration, to permit the design of structurally efficient load-carrying components which meet the requirements of other subsystems without adding unduly to maintenance complexity and time.

The design of the support structure system for STARFIRE was strongly influenced by the very large magnitude of the out-of-plane magnetic forces acting on the toroidal field (TF) coils, which result from the requirement that all superconducting equilibrium field (EF) coils be located outside the TF coils. This requirement, which precludes "interlocking" of superconducting coils, was considered fundamental for the reactor design so that replacement of a failed superconducting TF or EF coil could be accomplished within an acceptable downtime.

The method selected to react the large out-of-plane TF coil forces was to rigidly connect the outer legs of the room-temperature vacuum tanks of the TF coils through thick vertical steel panels, as shown in Fig. 16-1. The forces are carried from the superconductor to the helium vessel, then transmitted from the vessel to the surrounding vacuum tank through a system of struts fabricated from G-10 CR, a high strength fiberglass with low thermal conductivity. The vacuum tank in turn acts as a beam to transmit the loads to the pinned joints which attach the panel corners to the vacuum tank. Since ideally the loads for each coil are equal in magnitude and opposite in direction on either side of the midplane, the loads in each panel are balanced by attaching its vertical sides to the surfaces of adjacent vacuum tanks to effect a shear tie along the sides. The lower leg of each TF coil vacuum tank is attached to the reactor building floor to react unsymmetric load conditions and to stabilize the complete system.

Other major components of the system are the centerpost and its supporting thermal isolation struts, blanket/shield support pedestals, upper and lower vacuum pump support assemblies, and OH and EF coil dewars and supports.

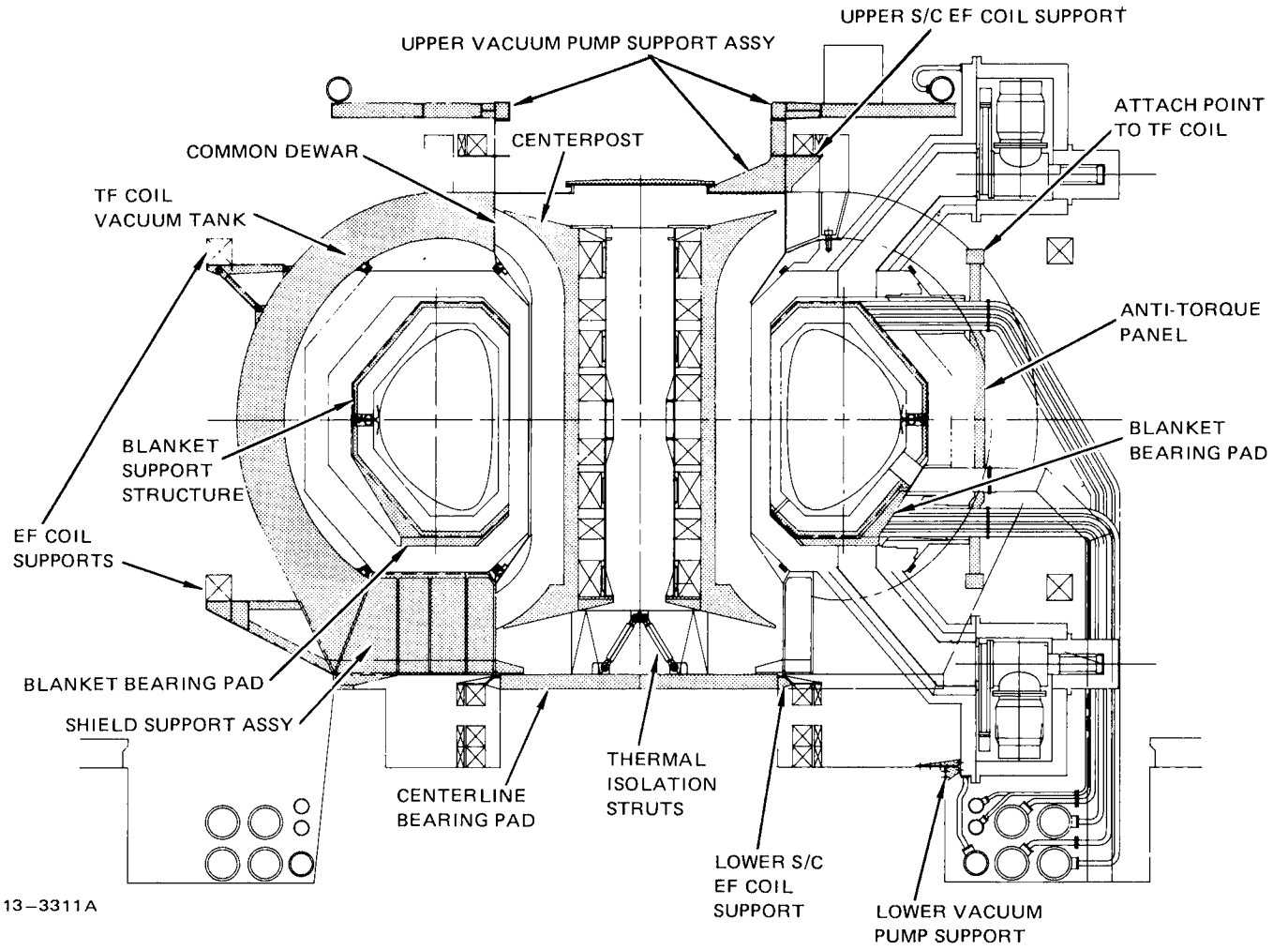

Figure 16-1. STARFIRE reactor support structure system.

The centerpost, constructed of G-10 CR fiberglass laminate, reacts the centering (radial) forces from all twelve TF coils, and reacts a small fraction of the TF coil out-of-plane forces as two torques acting in opposite directions on the centerpost top and bottom. The centerpost loads are reacted to the building floor through a set of thermal isolation struts, made from G-10 CR, which are attached to the bottom of the cylindrical portion of the centerpost. The major strut loads are vertical dead-weight loads since most of the torque due to TF coil out-of-plane forces is reacted to the building floor through the TF coil vacuum tanks.

The blanket/shield support pedestals are beam-and-web structures which attach to the bottom of each TF coil vacuum tank and which react loads from the blanket and shield sectors to the building floor. The upper vacuum pump support assembly is a structural channel assembly connecting all twelve upper vacuum pump shield pods, which reacts the large bending moment which otherwise would be applied to the penetration duct shield assembly resulting from the weight of the pod and pump assembly. The two large-diameter superconducting EF coils are supported from the TF coil vacuum tanks through tripod-shaped beam assemblies.

The preceding components, in addition to the TF coil vacuum tanks and anti-torque panels, are constructed of Nonmagne 30, a nonmagnetic austenitic manganese steel with low nickel and chrome content, selected to reduce activation of the structure to minimal levels and to reduce resource requirements for nickel and chrome. Nonmagne 30 is readily welded to itself and to other steels.

A finite element structural analysis was performed to determine the support structure system load distribution which results from the TF coil out-of-plane forces. Maximum deflection of the helium vessel was calculated to be 5.08 cm, which was judged to be acceptable for TF coil operation. Stresses in the helium vessel and vacuum tank were determined to meet ASME Code Section III (Nuclear) primary limits. The struts connecting vessel and tank were sized and located in accordance with the out-of-plane load distribution to keep stress levels at or below 276 MPa (40 ksi), equivalent to $\sim$1/3 the ultimate strength of G-10 CR at cryogenic temperature.

This chapter presents a discussion of the rationale for the design of the reactor support structure system design (Sec. 16.2). The major design

constraints and guidelines are also discussed. The geometry, material, fabrication and assembly of each of the major system components are presented in Sec. 16.3, together with a description of each component's function in reacting the major applied loads. The finite element analysis of the support structure system is discussed in detail in Sec. 16.4. In addition, off-nominal and worst-case accident situations are briefly discussed, and the seismic analysis presented in Appendix D, is briefly discussed in terms of changes to design details necessary to accomodate seismic loads.

16.2 DESIGN CONSIDERATIONS

16.2.1 Design Philosophy and Approach

The reactor support structure system must safely react all loads acting on reactor components resulting from magnetic, thermal, pressure, gravity and seismic forces. It must perform this task efficiently, to minimize the required amount of structural material and thus minimize capital costs related to material quantity and fabrication. The system must not make maintenance tasks more complex than necessary, in order to minimize reactor downtime and maximize availability. It should also be designed for life-of-plant, if possible.

In order to achieve these objectives, it is mandatory that the reactor support structure be considered and designed as a system, not as individual pieces each designed to perform specific tasks. Further, the design of the system must be integrated with the reactor design from its inception. This is necessary to ensure that the most efficient "load paths" -- planes or axes along which the forces are reacted -- are used for the components of the support structure system, consistent with the requirements of other reactor systems and the selected maintenance approach. The structure must not be considered as an "add-on" to the reactor design after completion of the basic designs for the other subsystems. That approach can result in grossly oversize and costly structure, simply because the remaining permissible load paths require the use of less efficient methods of reacting loads, e.g. shear and bending combined instead of direct shear.

The use of efficient load paths is particularly important for the STARFIRE reactor design because of the large out-of-plane magnetic forces

acting on the TF coils during operation (Chap. 9). Ideally those forces would be reacted most efficiently by forming a complete torus connecting all the TF coils; the torus surface would be that formed by rotating a coil 360° about the reactor centerline. Such an ideal torus is impractical for a power reactor design. Evaluation of candidate support structure approaches (Sec. 16.3) indicated that, for STARFIRE, the best structual approach overall is one which accommodates necessary protrusions (e.g., vacuum pump ducts) and which conforms to the selected maintenance approach (removal/replacement of large blanket sectors through the opening between TF coil outer legs) while approximating structurally the rest of the torus.

The basic STARFIRE design approach uses the latter concept. A large part of the torus is approximated by shear panels between adjacent TF coils, which are removable for blanket maintenance. The specific design of the support structure system and its components were developed in conjunction with the reactor design so that requirements for operation and maintenance of the other reactor systems were best satisfied.

16.2.2 Design Requirements and Constraints

The primary design requirements, guidelines, and constraints for the support structure system are presented in Table 16-1 and discussed below.

Table 16-1. Primary Design Requirements, Guidelines And Constraints For The Reactor Support Structure System

DESIGN REQUIREMENTS	DESIGN GUIDELINES	DESIGN CONSTRAINTS
o NORMAL OPERATION AND OFF-NOMINAL CONDITIONS: REACT ALL LOADS WITHOUT COMPROMISING SUBSEQUENT OPERATION	o USE EFFICIENT LOAD PATHS	o VACUUM PUMP DUCTS PENETRATE BETWEEN TF COILS AT TOP AND BOTTOM
o MAJOR ACCIDENT CONDITIONS: REACT ALL LOADS WITHOUT PERMITTING LARGE-SCALE UNCONTROLLED MOTION OF COMPONENTS	o DESIGN LIFE $\geq$ LIFE-OF-PLANT	o CIRCUMFERENTIAL DIELECTRIC BREAK REQUIRED IN CENTERPOST AND INTERCOIL STRUCTURE
	o THERMAL AND VACUUM ISOLATION OF: - TF AND EF COIL HELIUM VESSELS - CENTERPOST AND OH/EF COILS	o BLANKET COOLANT LINES AND RF DUCT EXTEND OUTWARD HORIZONTALLY BETWEEN TF COILS
	o MINIMIZE ACTIVATION OF STRUCTURE	o BLANKET SECTORS TO BE REMOVED THROUGH SHIELD BETWEEN ADJACENT TF COIL OUTER LEGS
	o MINIMIZE RESOURCE-LIMITED MATERIALS	o SUPERCONDUCTING EF COILS LOCATED 1 M OUTSIDE TF COILS
	o MINIMIZE IMPACT ON ROUTINE REACTOR MAINTENANCE TASKS	
	o DESIGN TO PERMIT FEASIBLE REPLACEMENT METHOD FOR ALL LONG-LIFE REACTOR COMPONENTS	
	o USE WELDED VACUUM JOINTS WHERE POSSIBLE	

The system is required to safely react all loads acting on the reactor components during normal operation and all off-nominal conditions (e.g., seismic events) other than major accident conditions, without experiencing permanent deformation to the extent that subsequent operation or maintenance of the reactor would be compromised. The primary concern in satisfying this requirement are the large out-of-plane forces acting on the TF coils. The forces vary poloidally around the TF coil but are equal and opposite in direction on either side of the reactor midplane, so that although net resultant force is zero, a large out-of-plane couple or moment is created which tends to overturn the TF coil. Magnitude of the force is 65 MN (14.6 x 10^6 lb). Centering forces and in-plane forces acting outward on the TF coil around its perimeter must also be reacted.

The worst-case accident situation considered, in terms of the effect on structure, was that resulting from one faulted TF coil (Sec. 9.5.2). In this situation large out-of-plane forces act on each of the two TF coils adjacent to the faulted coil, tending to push them away from the faulted coil (which experiences no forces since it carries no current). The forces are distributed nonuniformly around the perimeter of these coils; net force on each coil is 400 MN (90 x 10^6 lb). (Loads on coils further away are greatly reduced, and are not significant for an accident case). For this situation the structure was required only to restrain the coils so that total collapse of the coil system would not occur. Gross permanent deformation of some structure was permitted and subsequent major repairs to the reactor were assumed allowable (and perhaps necessary for a reasonable design), since as a minimum the faulted TF coil would have to be replaced anyway and other concurrent repairs would not unduly increase total downtime.

The most important guideline related to maintenance was to not significantly increase the time for or complexity of the most common scheduled and unscheduled reactor maintenance tasks, which involve costly reactor downtime. However, the design was also required to provide for feasible methods of removal and replacement of long-life components, such as the TF coils.

The TF and EF coil helium vessels are required to be thermally isolated from adjacent components to minimize cryogenic system cooling requirements, which means for practical designs that the vessels must also be surrounded by

multi-layer insulation in a high vacuum region. Because the TF coil inner legs and the OH/EF coils inside the centerpost are in close proximity, it was decided that the centerpost should also be within the vacuum region.

In line with overall project guidelines, emphasis was also placed on minimizing the amount of activated structure material, its degree of activation, and the use of limited or foreign controlled resources.

Numerous design constraints forced a compromise between structural efficiency and the design requirements for other reactor systems. The most important constraints were the locations determined to be necessary for vacuum ducts, RF ducts and blanket coolant lines, and accommodation of the selected maintenance approach for the blankets. The vacuum ducts which connect the vacuum plenum inside the bulk shield to the vacuum pump pod are $\sim 1\ m^2$ in cross section and are surrounded by 0.5 to 0.6 m thick shielding. The ducts are located at the top and bottom of the shield between adjacent TF coils to permit the vacuum system to remain intact during maintenance and to minimize heating of pump cryosorption panels due to neutron streaming. The ducts are inclined at 40° from the vertical to utilize the wider opening available at that point between TF coils. The duct and its shield occupy a large part of the area in this region which would otherwise be available for structure between adjacent TF coils.

The requirement that the blanket sectors be removed between adjacent TF coil outer legs dictated that any major structure in that region had to be relatively easy to remove and replace using remotely operated maintenance equipment. This meant that welded structural joints would not be practical and that less efficient nonpermanent mechanical connections were required to connect structural components. The protrusions of the blanket sector coolant lines and rf duct between coil outer legs also had to be accommodated by the structure without forcing extensive rerouting or other modifications of the lines and duct.

16.3 SUPPORT STRUCTURE REFERENCE DESIGN

The major elements of the reactor structure support are the twelve TF coil vacuum tanks, the twelve vertical anti-torque panels between the outer legs of adjacent TF coils, and the centerpost (see Fig. 16-1). These

elements in combination were determined to be the best means of reacting the out-of-plane magnetic forces on the TF coils, the dominant operational load experienced by the structure. This configuration was confirmed, through finite element structural analysis, to be satisfactory for operational loads, and was judged to best fulfill STARFIRE design requirements and to best satisfy the design guidelines of Table 16-1.

Other types of support structure systems were examined before deciding on the vacuum tank/panel approach. Two of these are illustrated in Fig. 16-2. The frame approach has typically been used on existing experimental tokamaks, and was also used in the Argonne TEPR design.[1] The resulting structure is very rigid and can be easily made of common structural steel shapes. However, the framework limits accessibility and accommodates protrusions such as the vacuum duct only with difficulty. More importantly, reaction of the torque in the upper support frame requires either tension ties to the building (as shown), or an X-shaped vertical frame assembly linking adjacent TF coil outer legs. Tension ties to the building were judged undesirable because they would interfere with overhead crane operation, and would force the use of wheeled or tracked maintenance devices traveling on the building floor unless all tension ties were first removed. The framework also interferes with any vertical removal of components from the reactor by the crane. Although the X-frame would serve the same function as a shear or anti-torque panel, it constrains the locations available for the blanket coolant line and rf duct protrusions. A variation of this concept was briefly examined which used an X-frame hinged at the bottom to fold down to a horizontal position during maintenance. This concept was rejected because it would interfere with the monorail.

A second alternate concept, examined only briefly, places the plasma chamber vacuum boundary outside the envelope of the TF and EF coils. The boundary also functions as a single vacuum tank for all coils, so that individual tanks are not required. To react adjacent out-of-plane forces, TF coil helium vessels are connected with a framework structure above the top and bottom of the outer leg. Resultant torques in the top and bottom frames about the reactor centerline are self-reacting through the (approximately) vertical parts of the helium vessels in the coil outer legs. Although this arrangement provides clear access to the reactor above and

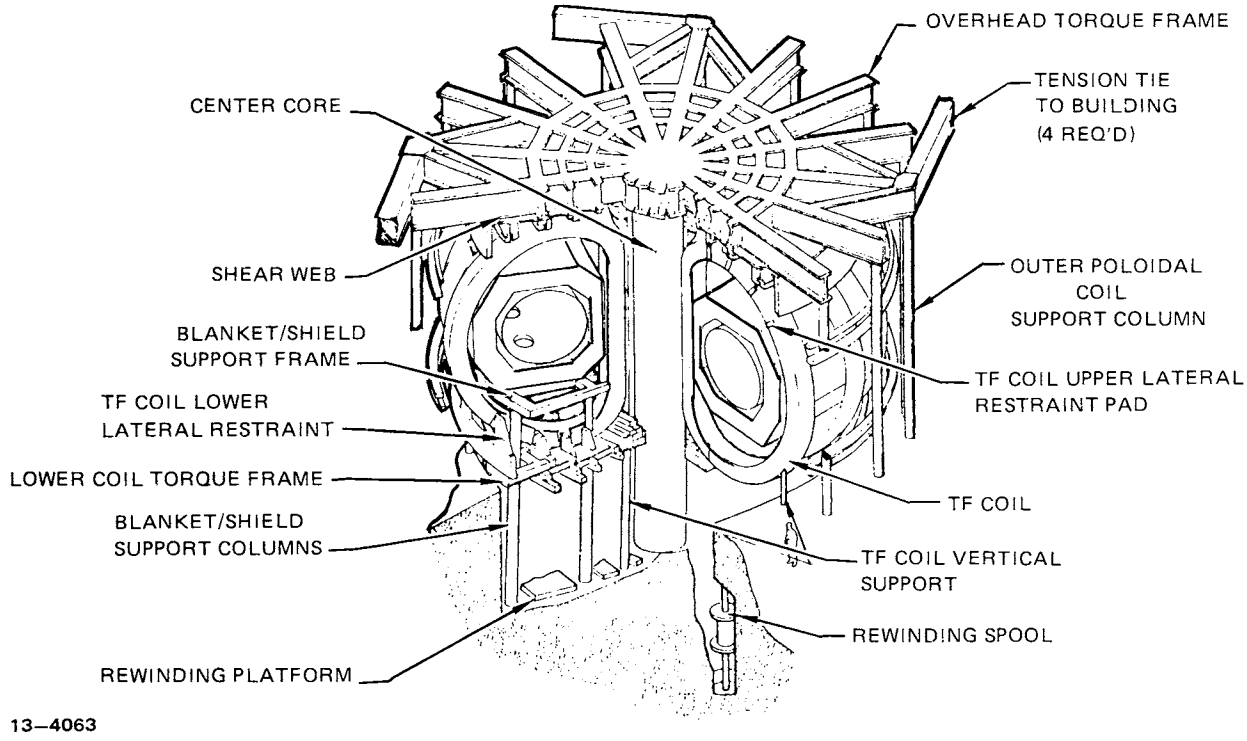

(a) Approach using torque frame.

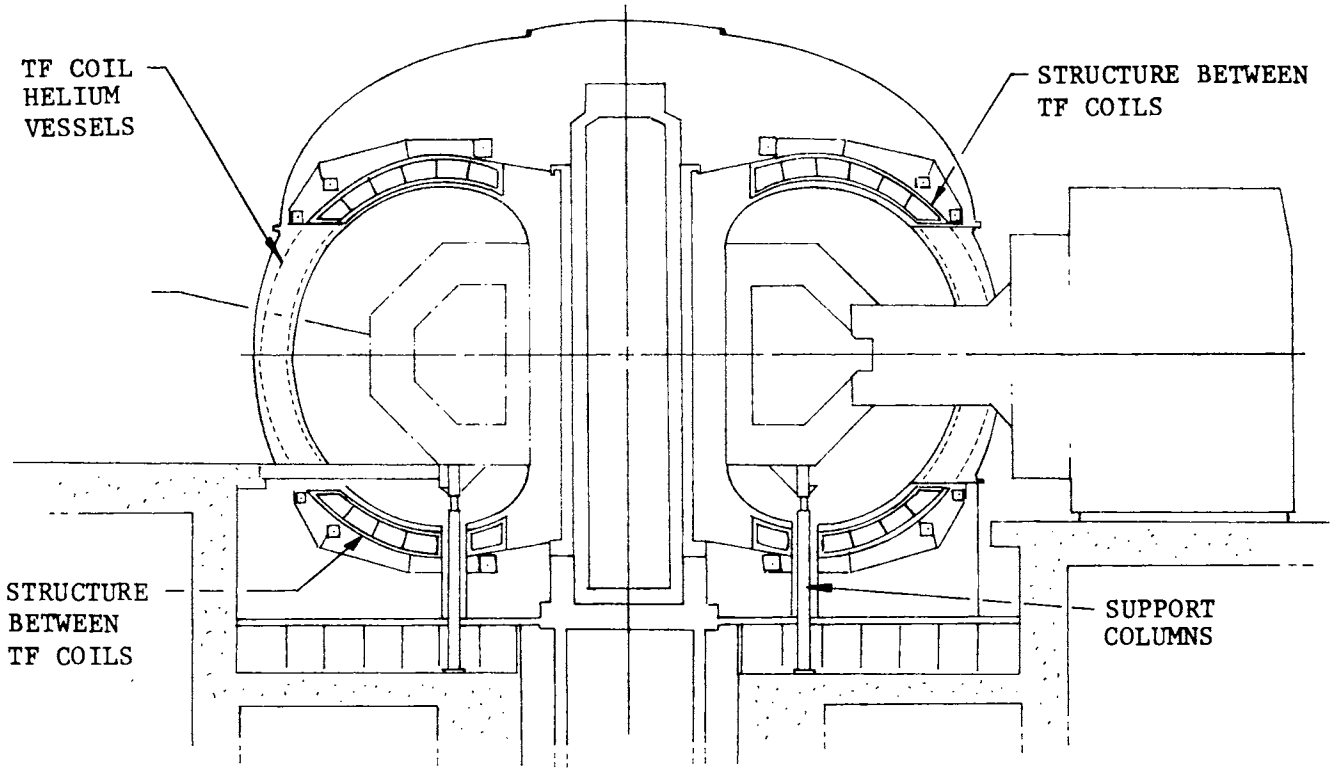

(b) Approach with torques self-reacting through helium vessels.

Figure 16-2. Alternate support structure system concepts.

below the midplane between adjacent TF coils, it constrains the size and location of any vertical protrusions from the reactor, such as vacuum pump ducts. The large resultant torques for the STARFIRE reactor design would produce large bending moments in the helium vessel vertical legs. Since the inside dimensions of the vessels are set by coil total area and field requirements, the vessels must be made quite thick to react the loads. Significant problems of high local stresses would probably be encountered in the joint between the frame and vessel, which is the location of maximum rate of change of the deflection angle of the vessel. Bending stresses and deflections for the coil cables in this region would also be a significant concern. Total deflection of the upper portion of the TF coils would also likely be large unless the helium vessel walls are made very thick to obtain a sufficiently large second moment of inertia.

Based on qualitative evaluation and comparison of the three concepts, the vacuum tank/panel approach was determined to be overall the most satisfactory for the STARFIRE reactor design.

The following paragraphs contain discussions of each significant component of the reactor support structure system. The selected materials and configurations are described together with the fabrication and assembly method. Major load sources for each component are given, together with the rationale for the selected configuration. Figure 16-1 illustrates the geometry of each component and their interrelationship. Components materials and weights are summarized in Table 16-2; material structural properties are summarized in Table 16-3.[2,3]

16.3.1 TF Coil Vacuum Tank

The vacuum tank for the outer leg of each of the 12 TF coils is provided by a steel plate structure of rectangular cross section (Fig. 16-3). The tank acts as a major element of the support structure system by reacting magnetic, gravity and seismic loads from the helium vessel and coil. Loads are transmitted from the helium vessel to the vacuum tank through a network of thermal isolation struts made of G-10 CR fiberglass. The vacuum tank and vessel in combination act to beam the out-of-plane forces radially inward to the centerpost and radially outward to the anti-torque panel. (The struts, helium vessel and TF coil are described in detail in Sec. 9.2.7.)

Table 16-2. Component Materials and Weights

COMPONENT	MATERIAL	DENSITY (kg/m^3)	VOLUME (m^3)	MASS (kg)
TF COIL ROOM TEMPERATURE DEWAR	NONMAGNE 30	7940	10.23/COIL 122.76 TOTAL	81,226 974,714
ANTI-TORQUE STRUCTURE	NONMAGNE 30	7940	11.03/COIL 132.4 TOTAL	87,574 1,050,888
CENTERPOST	G-10 CR	1900	147.0	279,300
CENTERPOST SUPPORT STRUT	G-10 CR	1900	.125 STRUT	238 1,425
THERMAL ISOLATION STRUTS	G-10 CR	1900	.084/COIL	160 1,920
BLANKET/SHIELD SUPPORT PEDESTAL	NONMAGNE 30	7940	4.39/COIL 52.7 TOTAL	34,856 418,438
COMMON DEWAR	NONMAGNE 30	7940	8.80	69,872
VACUUM PUMP SUPPORT STRUCTURE	NONMAGNE 30	7940	3.11	24,693
EF-COIL SUPPORT STRUCTURE	NONMAGNE 30	7940	.0784/COIL .941 TOTAL	622 7,472
EF/OH SUPPORT STRUCTURE	G-10 CR	1900	1.935	3,676
				2,727,804

Table 16-3. Structural Properties of Materials in Support Structure System (Refs. 2,3)

PARAMETER	NONMAGNE 30		G-10 CR		GRAPHITE EPOXY[a]	
	21°C	-130°C	20°C	-269°C	20°C	-55°C
YIELD STRENGTH	362 MPa (52.5 ksi)	613 MPa (88.9 ksi)	N/A	N/A	N/A	N/A
TENSILE STRENGTH	797 MPa (115.6 ksi)	817 MPa (118.5 ksi)	414 MPa (60 ksi)	863 MPa (125 ksi)	241 MPa (35 ksi)	241 MPa[b] (35 ksi)
MODULUS OF ELASTICITY	199.3×10^3 MPa (28.9×10^6 psi)	199.3×10^3 MPa[b] (28.9×10^6 psi)	28.3×10^3 MPa (4.1×10^6 psi)	35.8×10^3 MPa (5.2×10^6 psi)	69.6×10^3 MPa (10.1×10^6 psi)	67.6×10^3 MPa (9.8×10^6 psi)
POISSON'S RATIO	.26	.26	.15	.211	.38	.37

NOTES:

[a] FIBER DIRECTION:
45% IN ± 45° DIRECTION
22.5% IN 0° DIRECTION
22.5% IN 90° DIRECTION

[b] ESTIMATED.

[c] NA = NOT APPLICABLE

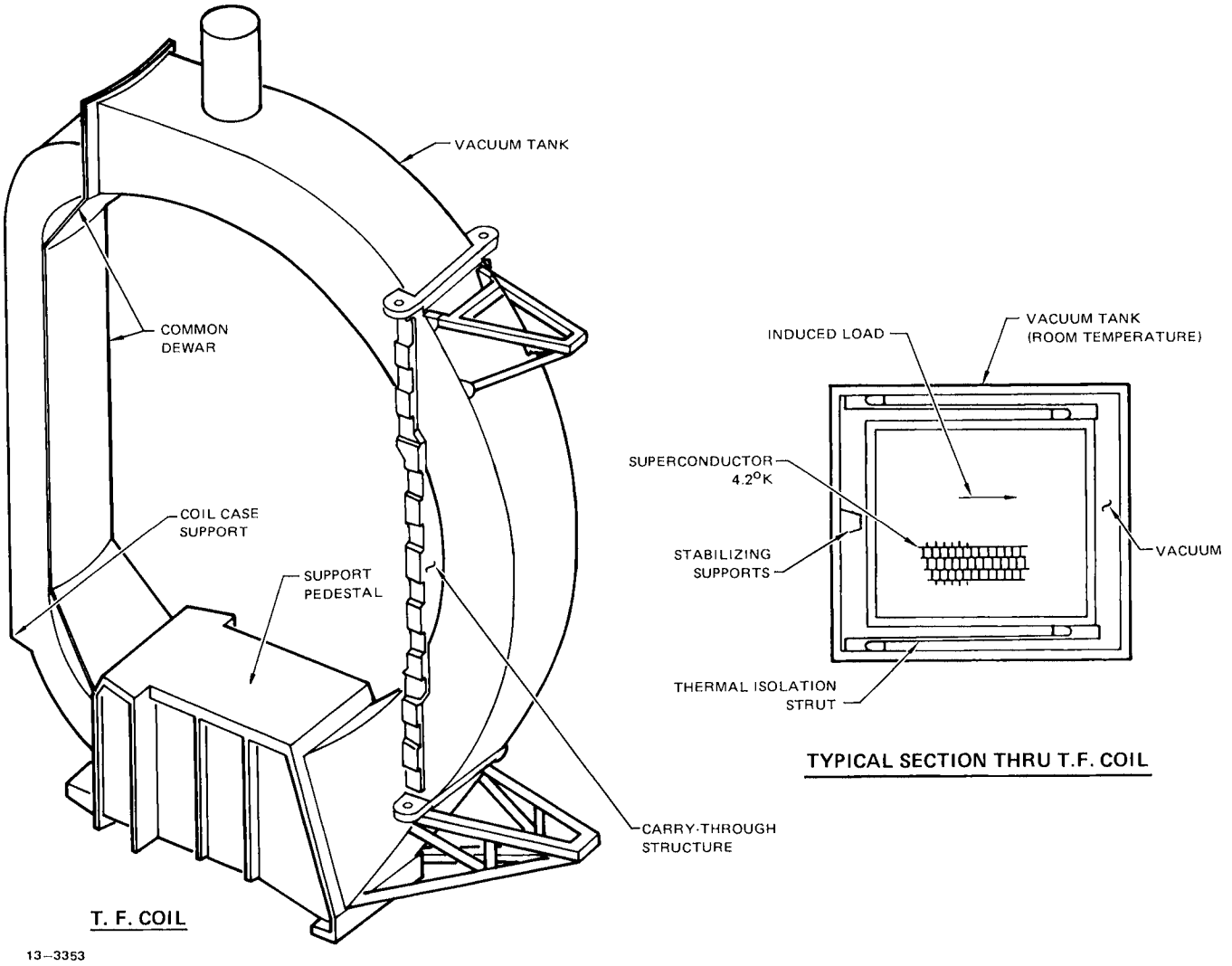

Figure 16-3. TF coil structural configuration.

The helium vessel and vacuum tank do not act as an ideal composite beam, one within the other, which would require that the inner and outer parts be deflected equally at any given cross section. These deflections are only approximately equal, the difference being due to the tensile strain induced in the fiberglass struts which have a modulus of elasticity only $\sim$1/5 that of the steel in the vacuum tank and vessel. To preclude overloading of the struts and to minimize the rate of change of deflection in the helium vessel, strut spacing along the tank axis was varied together with strut depth as necessary to keep stress levels in all struts at or below 276 MPa (40 ksi), $\sim$1/3 the ultimate strength of the fiberglass at cryogenic temperature. In the regions of greatest out-of-plane forces, adjacent struts are separated only by narrow gaps, and a strut depth of 7.5 cm (3 in.) is required. This area requires further development; if the attachments for these larger struts resulted in locally high moments, solutions such as substituting steel for fiberglass as the strut material in the regions of maximum load would be examined.

The vacuum tank is attached to the anti-torque panel through tension and shear ties. The corners of the panels on either side of the tank are fastened to it through a pin which joins mating lugs on the tank and panel. Keys, or "teeth," transmit a shear load (which results from panel deflection) along the vertical sides of the anti-torque panel to mating teeth in the sides of the tank and in a fixed vertical shear plate located slightly inward radially from the inner surface of the outer leg tank. The fixed plate, called the carry-through, balances the shear load from one panel with an equal but opposite shear load from the panel attached to the other side of the tank. The plane of the plate is parallel to the vacuum tank inner surface at the midplane. "Kick" loads resulting from the 30° difference in angle between the planes of adjacent anti-torque panels are reacted through the pinned joints at the anti-torque panel corners into the tank.

A second strut system also connects the helium vessel and vacuum tank. These struts lie in vertical planes, and react gravity loads and vertical forces during seismic events. This strut system was not analyzed since the loads involved are less than 1/10 those from the out-of-plane magnetic forces.

Reaction of forces on the TF coils for the worst-case accident, one faulted coil, involves load paths considerably different from those for normal operating loads. No forces act on the faulted coil; however, forces totalling 400 MN (90 x 10^6 lb) act on each of the adjacent TF coils, tending to push them away from the faulted coil. Limited structural damage can be accepted for this condition, the primary objective being to prevent total collapse of the TF coil system (i.e., azimuthal breakaway). To prevent large-scale movement of the helium vessel within the vacuum tank for the coils adjacent to the faulted coil, caused either by overloading or by load reversal on the struts, flat pads or "bumpers" are added at regular intervals to the inside surfaces of the tank sides. The surfaces of these pads are less than 1 cm away from the helium vessel surface during normal loading conditions. Thus under the large accident case forces the helium vessel is pushed against the pads and the forces are transmitted in bearing directly to the tank. The faulted coil case is discussed further in Sec. 16.4.2.

The vacuum tank is constructed of Nonmagne 30 steel (see Sec. 16.1) in modular fashion around the helium vessel. Each module consists of steel plates 1/2 to 1 m in length, with the exact length being determined by manufacturing considerations. After the struts for the module are connected to the helium vessel, the plates are welded to each other along mating edges and to the adjacent module previously completed.

16.3.2 Anti-Torque Panel

The twelve anti-torque panels are located between adjacent TF coil outer legs, just outward of the shield doors. Each panel lies in a vertical plane which is perpendicular to a ray from the reactor centerline equidistant between coil centers.

Each panel is approximately 28 cm thick on the average, with the middle portion closest to the shield door being somewhat thicker to function neutronically as added shielding. Rectangular-shaped cutouts in the panel permit coolant line and rf duct bundles from the blanket sector to pass through. A boron compound several millimeters thick is applied to the outward-facing surface of the panel, to minimize radiation (specifically, thermal neutrons) from the steel in the panel which becomes activated during reactor operation.

The panels are attached at their corners to the sides of adjacent TF coil vacuum tanks through pinned joints, and along their vertical sides to the tanks and carry-through structure through a series of machined keys and slots. A dielectric break poloidally is required in the anti-torque panel assembly to preclude any current path between adjacent TF coil vacuum tanks. The panels' structural function was described in the previous section.

An alternative concept to the panel, a steel brace frame, was studied and subjected to a preliminary stress analysis. The concept is shown in Fig. 16-4. In this concept the solid shear panel is replaced with a system of three braces, the ends of which are attached to flat frames. Serrations on the outside of the frames mate those in a plate which is either bonded to the vacuum tank or fastened with bolts installed in blind tapped holes in the tank. Intersection points of the brace centerlines and the tank sides are selected to minimize the bending moment in the tank/vessel combined beam between any two attach points. The assembly is removed by unsplicing the joint in the center leg, and the single joint in each vertical frame which is located at the point of minimum load.

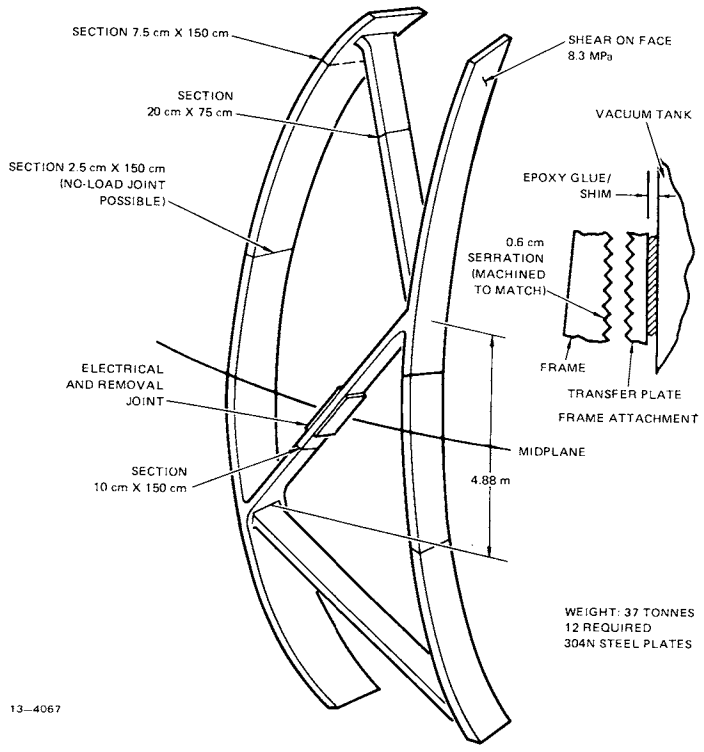

Figure 16-4. Steel brace frame concept.

As conceptually designed the steel brace frame is far lighter than the anti-torque panel, 37 tonnes vs 87 tonnes. However, it was considered that the braces and possibly the frames would have to be considerably heavier and of a much larger cross section to provide adequate margin against column buckling for the very high compression loads being carried. Also, the 30° included angle between the planes of the two frames connected by the braces is expected to result in a component of the friction force at the interface of mating serrations which would tend to force the assembly outward and thus disengage the serrations. Thus the frames would have to be positively attached (e.g., bolts) to the vacuum tank sides, or the serrations on the two frames would have to be cut with a zero included angle (in the horizontal plane), making alignment of the small (∿1/2 cm) serrations much more difficult during removal or reinstallation. Although the concept has large open areas for access to the reactor, the required locations for the three braces constrain the possible locations for the blanket coolant line and rf duct bundles. In addition, the frame assembly could not serve as shielding. Therefore, it was judged that overall the anti-torque panel concept was more efficient for use in the reactor support structure system.

Two aspects of the panel which require further design development are the dielectric break and the panel-to-tank attachment method. Both are considered to require only improvements in design rather than technology breakthroughs.

The dielectric break can be located either at one or both vertical sides of the panel, or in the central region along a convenient vertical section. An epoxy bond between the vacuum tank and a vertical frame member with machined slots would act as a dielectric break and would also provide some adjustment capability during initial fit-up of the panel to the tank. The average shear load is 53.8 MPa (7800 psi) which would require a bonding agent of higher shear strength than available today. Insulation of the pin at each panel corner could be accomplished through use of a non-metallic insert in the lug holes. On the other hand, placing the dielectric break in the central region of the panel would required a double splice plate arrangement with insulators between each plate and the panel and around each shear transfer pin.

The pin at each panel corner transfers a load of 9.8 MN (2.2×10^6 lb) in shear through a lug set, which requires a high-strength steel pin of approximately 8-12 cm diameter. The requirement for removal and replacement of the panel will necessitate further design effort to determine the values of pin-to-lug and key-to-slot clearances which will facilitate the maintenance operations while minimizing panel motion during initial load application.

The panels are made of Nonmagne 30 steel. Fabrication is straightforward, using state-of-art machining and tooling methods. The required close-tolerance gaps between each key and its mating slots is verified using slightly oversize check tooling, the reverse of which is used to verify the mating edge of the tank and carry-through.

16.3.3 Centerpost

The centerpost for the STARFIRE reference reactor design performs a number of important structural functions, by reacting:

- centering (radial) loads from the TF coils;
- a fraction of the torque resulting from out-of-plane TF coil forces;
- all OH/EF coil forces; and
- TF coil inner leg gravity loads.

The centering loads from the twelve TF coils are self-reacting. All other loads are transmitted from the centerpost to the building floor through the support strut assembly (see Sec. 16.3.5).

The relatively small out-of-plane magnetic forces in the TF coil vertical inner leg are transmitted in bearing from a key (raised rib) along the helium vessel centerline to a mating slot in the centerpost. The much larger forces from the TF coil at the top and bottom away from the inner leg are reacted in part by large bosses on the outside of the flared regions at the top and bottom of the centerpost. The raised surfaces on the flares fit closely between adjacent helium vessels and pick up out-of-plane coil loads as the vessels deflect. The loads from the 12 coils result in a torque, having equal magnitudes but opposite directions at the top and bottom of the center post. The flares and bosses extend outward between vessels for only a relatively short distance, since the reduction of stiffness with radial

distance from the cylindical portion of the centerpost rapidly reduces the flares' effectiveness.

The OH/EF coils are contained in two sleeves set one atop the other within the centerpost. The coils have no individual vacuum tanks since the center post is within a vacuum region; thus the helium vessel of each of the eight coils is rigidly connected directly to the sleeve structure. In the event coil replacement is necessary the sleeves are removed vertically through the top of the centerpost.

The weight of the TF coil inner leg is reacted by the centerpost through a ledge formed in the lower centerpost cylindrical outer surface, which mates a step in the TF coil helium vessel.

The centerpost is fabricated of G-10 CR fiberglass laminate. This material was selected primarily because it is a dielectric with relatively good structural properties. A metallic centerpost was not selected for STARFIRE because of the many difficulties involved in constructing reliable electrically insulated mechanical joints in the structure. Further manufacturing development effort is required to find the best method of incorporating the slots for the helium vessel keyways into the fiberglass centerpost.

16.3.4 Common Dewar

Most of the vacuum boundary for the centerpost region and the TF coil inner leg helium vessels is formed by the common dewar, a body of revolution made of steel 1 cm thick, which extends from the building floor to the outer edge of the conical frustum atop the centerpost (see Fig. 16-1).

The common dewar is welded from cylindrical and conical subassemblies of Nonmagne 30 steel. The bottom edge of the dewar is welded to the steel liner of the building floor and the top edge is welded to the conical frustum which is a part of the upper vacuum pump support system (Sec. 16.3.5). The common dewar is welded to the perimeter of each of the 12 TF coil vacuum tanks at the point where the helium vessels penetrate the common dewar near its top and bottom. Thus, all 12 TF coil helium vessels and all eight inboard OH/EF coil helium vessels are contained within one common vacuum region.

The common dewar, in addition to providing a vacuum boundary, was originally intended to react a major part of the torques resulting from TF coil out-of-plane loads. However, it was found that for the required steel thicknesses (∿7-8 cm) the two normal-conducting copper field coils nearest the common dewar could not adequately control the plasma because of the strong "mirror effect" of the thick metal on the coil fields. A reliable electrically insulated vacuum-tight mechanical joint in the common dewar was not considered feasible. Nonmetallic materials for the dewar structure were rejected because of similar reliability concerns for vacuum-tight bonds between a nonmetallic compound and the metallic components interfacing with the dewar. Therefore, it was decided to reduce the dewar thickness to 1 cm and to modify the centerpost to accept part of the TF coil torque load (Sec. 16.3.3). Stiffening ribs can easily be added to the dewar where necessary to preclude buckling from the ∿1 atm pressure differential.

16.3.5 Thermal Isolation Struts

The bottom part of the centerpost is connected to the building floor through an assembly of thermal isolation struts (Fig. 16-1). The two primary requirements for the struts are (1) to minimize heat conduction from the building floor to the centerpost which is at 4.2°K, and (2) to react lateral, vertical and torque loads from the centerpost to the floor. These requirements were determined to be best satisfied for the STARFIRE reactor by a set of twelve struts fabricated from G-10 CR fiberglass. The struts are connected in pairs to the floor through machined lugs, with each strut pair forming a V-shape in the vertical plane with a 60° included angle between struts. The struts are similarly connected to the bottom of the cylindrical portion of the centerpost. The machined lugs are attached to the fiberglass centerpost with bolts fastened to inserts embedded in the laminate.

Each strut is 2.4 m long and 36 cm in diameter, which provides adequate safety margin for operational loads. However, increased strut thickness or a change to a stiffer strut material would be necessary to accommodate vertical loads during seismic events, as discussed in Sec. 16.4.3. This is a relatively simple design change which could be accomplished during a future reactor design iteration.

16.3.6 Upper and Lower Vacuum Pump Support Assemblies

The 24 shield pods which contain the 48 vacuum pumps are each connected to the bulk shield surrounding the blankets through the penetration duct shields, which are approximately 5 m in length and at a 40° angle from the vertical. As a result, supporting the large mass of each pod/pump combination (276 tonnes) requires considerable attention. The cantilever beam effect due to the dead weight acting on each duct should be minimized or preferably avoided, otherwise massive structure for the duct shielding would be required.

Two structural assemblies were designed for the 12 upper and 12 lower pod/pump combinations respectively (Fig. 16-1). These assemblies provide restraint against pod motion in the horizontal direction, and thus react the moment due to the pod/pump gravity (or seismic) vertical load acting on the horizontal moment arm along the duct. This results in duct shield loads being mostly compressive, with minimal bending since the strut angle is close to 45° which makes the horizontal reaction nearly equal to the vertical load.

For the upper pod/pump combinations the resulting horizontal loads are self-reacting through a welded framework fabricated from standard structural steel shapes. The central region of the assembly above the centerpost is welded to a cylindical extension of the common dewar. A central flat disk completes the dewar vacuum boundary. Horizontal loads are transmitted from the pump support assembly to the flat disk in shear through the cylindrical dewar. The resultant bending moments in the dewar are accommodated by stiffening ribs; smaller ribs on the flat disk prevent buckling due to the $\sim$1 atm differential pressure.

Although maximum structural efficiency in the upper support assembly would be achieved by completing the welded framework across the reactor in a single horizontal plane, it was considered better for the overall reactor design to use the cylinder/disk combination. The plane of the disk is lowered and made the same as the vacuum tank outer surface at the top of the TF coil. This reduces the volume of the central vacuum region, which reduces pumping requirements. It also increases out-of-plane bending stiffness of the TF coil vacuum tanks in the region between the common dewar and the

penetration ducts, which reduces TF coil helium vessel out-of-plane deflections. The center disk is bolted to a permanent perimeter disk which is welded to the cylindrical dewar. Access to the OH/EF coil support sleeves is obtained by removing the bolts and cutting the seal weld around the outside of the center disk. The sleeve/coil assemblies can then be removed and replaced using only the overhead crane, without requiring the removal of any additional structure.

The lower pod/pump combinations are each restrained from motion in the horizontal plane through individual support brackets which connect the vertical inner wall of the pod to the building floor. These brackets and the entire upper support assembly are fabricated from Nonmagne 30 steel. Fabrication and assembly are straightforward, using present-day machining and welding processes.

16.3.7 Blanket/Shield Support Pedestals

The blanket/shield support pedestals are large welded beam-and-web structural assemblies of Nonmagne 30 steel which are integral with the bottom part of each TF coil vacuum tank. They provide the only structural connection between the reactor and the building floor, other than the centerpost support struts. (The contribution of the common dewar, by comparison, is not significant). Thus the pedestals are required to react virtually all loads from reactor components other than the centerpost, OH/EF coils and sleeves, and TF coil inner legs.

The cross section of each pedestal assembly resembles an inverted flat-bottomed U, as indicated in Figs. 16-1 and 16-3. A stiffened horizontal plate connects the legs of the U. The plate takes vertical loads from the shield assembly and the blanket sectors, and the vertical sides of the pedestal transmit these loads to the building floor.

Each small shield sector is directly supported by the pedestal beneath it. The sides of each large shield sector rest on the edges of adjacent pedestals, which efficiently react the large shield sector weight while permitting the penetration ducts and shields to be located between pedestals.The large blanket sectors are located within the small shield sectors, so that large blanket sector loads are transmitted directly through the shield to the

pedestals. The small blanket sector is located within the large shield sector, and its vertical loads are transmitted through the shield to the sides of adjacent pedestals. Steel bearing pads are located between each blanket/shield sector pair which permits insertion and operation of air bearing pads during maintenance for blanket sector removal and replacement. Blanket weight is transmitted to the pod through the large sector support frames at the sides of each sector (see Chap.10).

The pedestal also functions as the TF coil vacuum tank between the bottom of the outer leg and the common dewar. (The steel liner of the building floor serves as the bottom-most wall of the vacuum boundary.) The pedestal is fastened to the building floor and can thereby react loads in all directions. In particular, most of the resultant torque from out-of-plane magnetic forces in the lower part of the TF coil are reacted by the pedestals, instead of being transmitted through the TF vacuum tank/helium vessel combined beam to the centerpost.

The gravity load reacted by each pedestal is approximately 1300 tonnes. Higher vertical loads occurring during seismic events can be easily accommodated by increasing structural thicknesses of the pedestal components as necessary.

16.3.8 EF Coil Vacuum Tanks and Supporting Structure

Each of the four superconducting EF coils outside the centerpost (Fig. 16-1) requires an individual vacuum tank and a means of reacting gravity, seismic and out-of-plane magnetic loads. Restraint in the horizontal plane for the helium vessels must also be provided. Primary constraints on possible design options were (1) the need to permit coil replacement in a relatively short period of time (at least by comparison to TF coil replacement time), (2) the need to adapt the support structure individually for each coil to existing nearby structure and equipment, and (3) the requirement that EF coil centerline locations meet plasma confinement requirements.

The vacuum tank for each EF coil is constructed of Nonmagne 30 steel panels which are connected to the helium vessels through thermal isolation struts of G-10 CR fiberglass in assemblies similar to those within the TF coil.

The upper and lower small-diameter EF coils are each supported at 12 points around the outside circumference of the dewar by gusseted steel plates which are welded to vertical extensions of the common dewar. The upper and lower large-diameter EF coils are each supported from each of the 12 TF coil vacuum tanks by tripod-shaped support assemblies constructed of welded structural channel shapes. The lower assemblies are fixed, but the upper assemblies are hinged to swing up and out of the way during coil replacement. (See Chap. 20 for EF coil replacement scenarios.) Although EF coil vacuum tanks and support assemblies were not analyzed and sized for out-of-plane (vertical) forces, simple calculations (Sec. 9.3.3) indicate that these forces can be accomodated with acceptable out-of-plane coil deflections using EF coil vacuum tanks of $\sim$3 cm thickness or less. Thus design of the EF coil vacuum tanks and support assemblies is not considered to be a problem. The support assemblies for all four EF coils are constructed of standard structural shapes made from Nonmagne 30 steel using present-day fabrication and assembly techniques.

16.4 STRUCTURAL ANALYSES

The STARFIRE reactor support structure system conceptual design was derived largely through the qualitative comparison of the relative advantages and disadvantages of various design options in terms of the benefits to the overall reactor design. First-order-approximation strength analysis was performed as required to support these comparisons, which in most cases was sufficient and appropriate for a conceptual design such as STARFIRE.

However, because of the large magnitude of the out-of-plane TF coil magnetic forces and the numerous possible load paths for distributing those forces through the structure, it was decided that the structural adequacy of the selected TF coil vacuum tank/anti-torque panel approach should be checked using more sophisticated analytical techniques. Accordingly, a NASTRAN[4] finite element model of the major STARFIRE structural components was constructed to determine the load distribution and deflections resulting from TF coil out-of-plane forces. This analysis is discussed in Sec. 16.4.1. The results confirmed the structural adequacy of the selected approach and indicated areas for design detail improvements.

The worst-case accident condition, that of a single faulted coil, was examined qualitively to determine whether additional structure was necessary to ensure the restraint of the TF coil system against collapse. This evaluation is discussed in Sec. 16.4.2.

A seismic analysis of the STARFIRE design was also performed. For the Zone 2 conditions assumed, the results indicated that the frequencies of the major reactor components are not closely coupled, so that lateral and vertical deflections can be held within desired limits without major structural changes being required. Increased stiffness of the centerpost support struts and the addition of overtravel bumpers were shown to be desirable. The analysis is discussed in detail in Appendix D and the results are summarized and discussed in Sec. 16.4.3.

16.4.1 TF Coil Structural Analysis

A NASTRAN finite element model of the STARFIRE design was constructed to calculate the internal load distribution and resulting deflections from the out-of-plane loads acting on the TF coil. A 30° toroidal section of the reactor was modeled, with one TF coil and vacuum tank at the model centerline, as shown in Fig. 16-5. The model consists of 414 bending plate elements and 285 bar elements. Bending plate elements were used to model the vacuum tanks, common dewar, centerpost, and anti-torque panels. Bar elements were used to model the TF coil helium vessel, centerpost support struts, and struts connecting the TF coil to the vacuum tank. No credit was taken for the stiffness of the coils within the helium vessel.

The support struts connecting the TF coil to the vacuum tank were sized to limit applied stress to a maximum of 276 MPa (40 ksi), ∿1/3 of ultimate strength for G-10 fiberglass at cryogenic temperature. Based on the grid size chosen for the TF coil vacuum tank, more than one support strut was often located in the area between the grid points. Therefore, the cross-sectional areas of the modeled struts were increased proportionately to represent the cross-sectional area of the actual number of struts in the reactor.

The reactor structure is required to react both a symmetric loading and an unsymmetric loading from the TF coils. The symmetric loading condition is

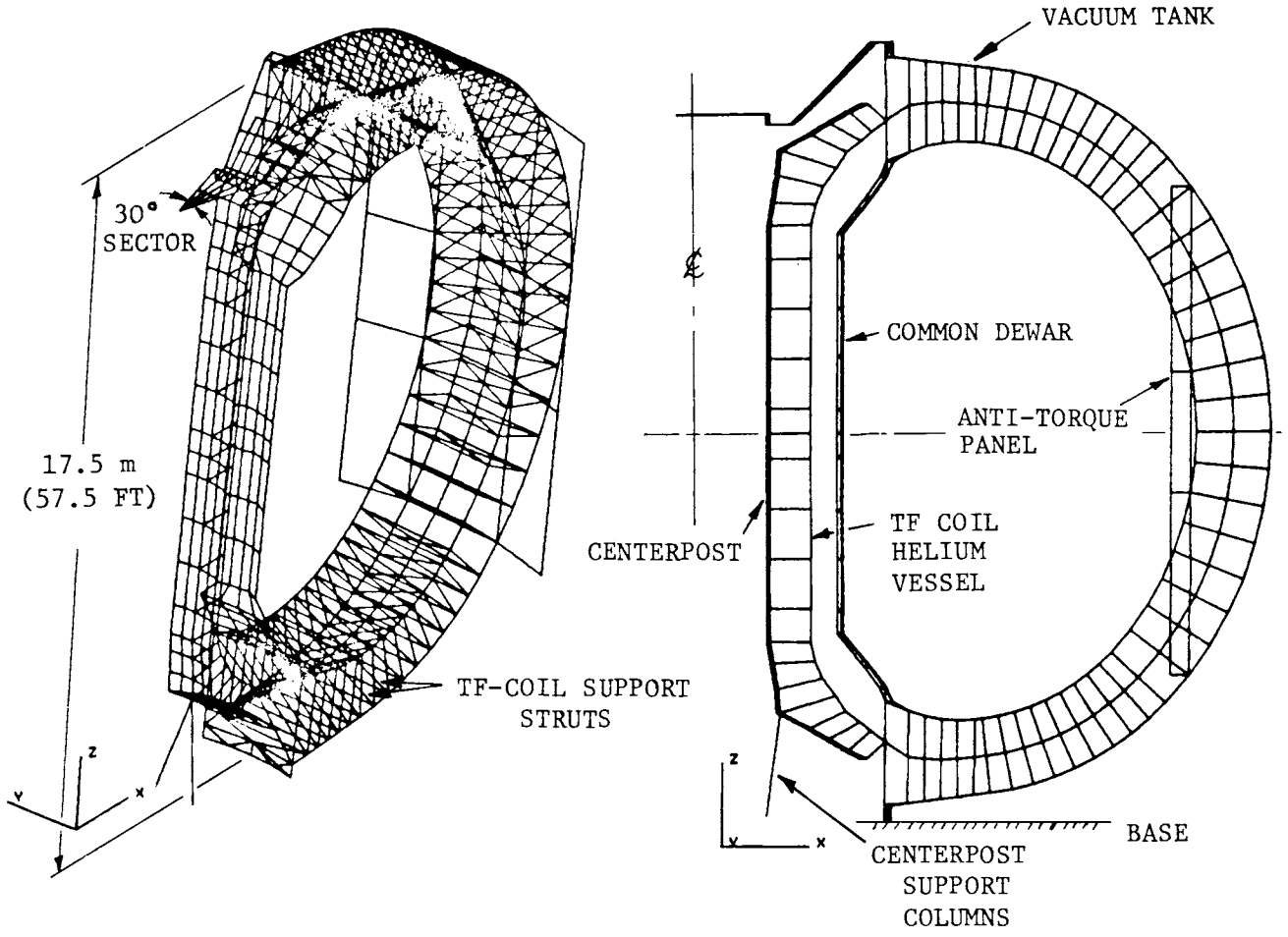

Figure 16-5. Finite element model of STARFIRE structure.

a radial 69 MPa (10 ksi) magnetic centering pressure acting on the centerpost and a ∿1 atm external pressure acting on the common dewar. The unsymmetric loading condition (Chap. 9) is a 65 MN (14.6 x 10^6 lb) out-of-plane load couple acting on the top and bottom of each TF coil. This load couple acts on each TF coil in a clockwise direction (looking down) in the upper half of the reactor and in a counterclockwise direction in the lower half of the reactor.

With only a 30° sector of the reactor modeled, a separate subcase (solution) was required for each loading condition due to different edge constraints being required for the two loadings. By applying the correct edge constraints to the 30° model for each loading condition, a complete 360° torus was represented (a feature of the NASTRAN code). A NASTRAN case combination option that provides the capability to linearly combine results

from different loading conditions was used to calculate overall deflections and stresses of the structure.

The resulting deflected shape for the total loading on the structure is shown in Figs. 16-6 and 16-7. The out-of-plane loading on the TF coil causes a twisting of the structure about the horizontal centerline of the reactor, as shown in Fig. 16-6. Bending of the vacuum tank occurs between the connection with the common dewar and the anti-torque panel, as shown in Fig. 16-7. TF coil helium vessel out-of-plane deflection increases sharply in the region where helium vessel support transitions from the centerpost to the support struts that connect the helium vessel to the vacuum tank. This increase in deflection is due to sharply reduced stiffness in the unsupported length of helium vessel (the only stiffness being that of the vessel itself) combined with the relatively high loads in this region.

Deflections of the TF coil and helium vessel vacuum tank versus poloidal position are shown in Fig. 16-8. The maximum helium vessel out-of-plane deflection is 5.08 cm (2.0 inches) which occurs in the upper half of the reactor in the region between the centerpost and anti-torque panel. In the lower half of the reactor, TF coil out-of-plane deflection is less, 3.74 cm (1.55 inches), due to the additional restraint provided by the blanket/shield support pedestal. Maximum out-of-plane deflection of the vacuum tank is 4.19 cm (1.65 inches) and occurs at the same location as the helium vessel maximum deflection. The difference between the helium vessel and vacuum tank deflections is the amount the support struts deflect in tension.

Out-of-plane deflection can be reduced by increasing the stiffness of the support struts, or by increasing the stiffness of both the helium vessel and vacuum tank to reduce the bending taking place in the composite beam between the centerpost and anti-torque panel. To help reduce the rapid change in TF coil helium vessel deflection at the point where the centerpost ends and the vacuum tank begins, stiffening plates can be added in this region that connect the radially inward and outward surfaces of adjacent vacuum tanks (Fig. 16-9). These stiffening plates would force all twelve tanks to act as a unit, thereby greatly increasing the torsional stiffness of the structure. The addition of stiffening plates would also reduce the amount of bending taking place in the helium vessel by reducing the free span between supports. (It should be noted that the reactor design analyzed did

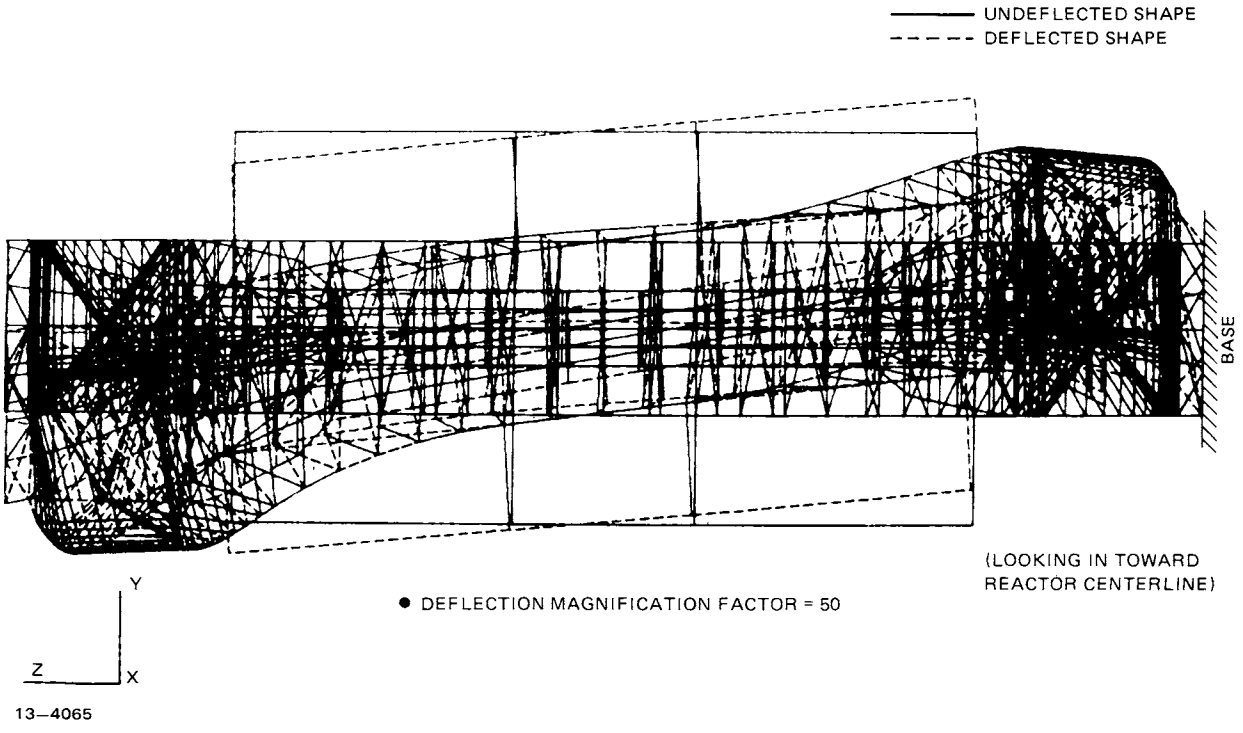

Figure 16-6. Structure deflections about horizontal centerline.

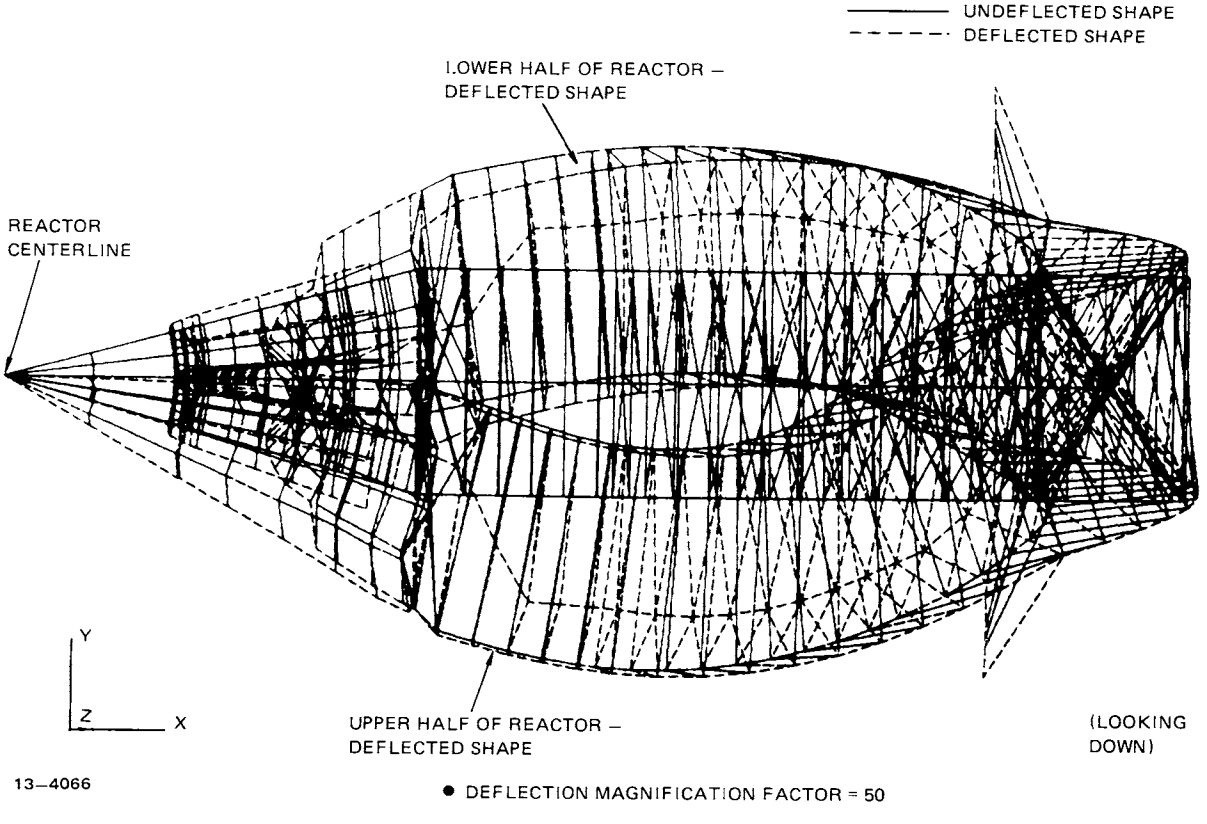

Figure 16-7. Structure deflections about vertical centerline.

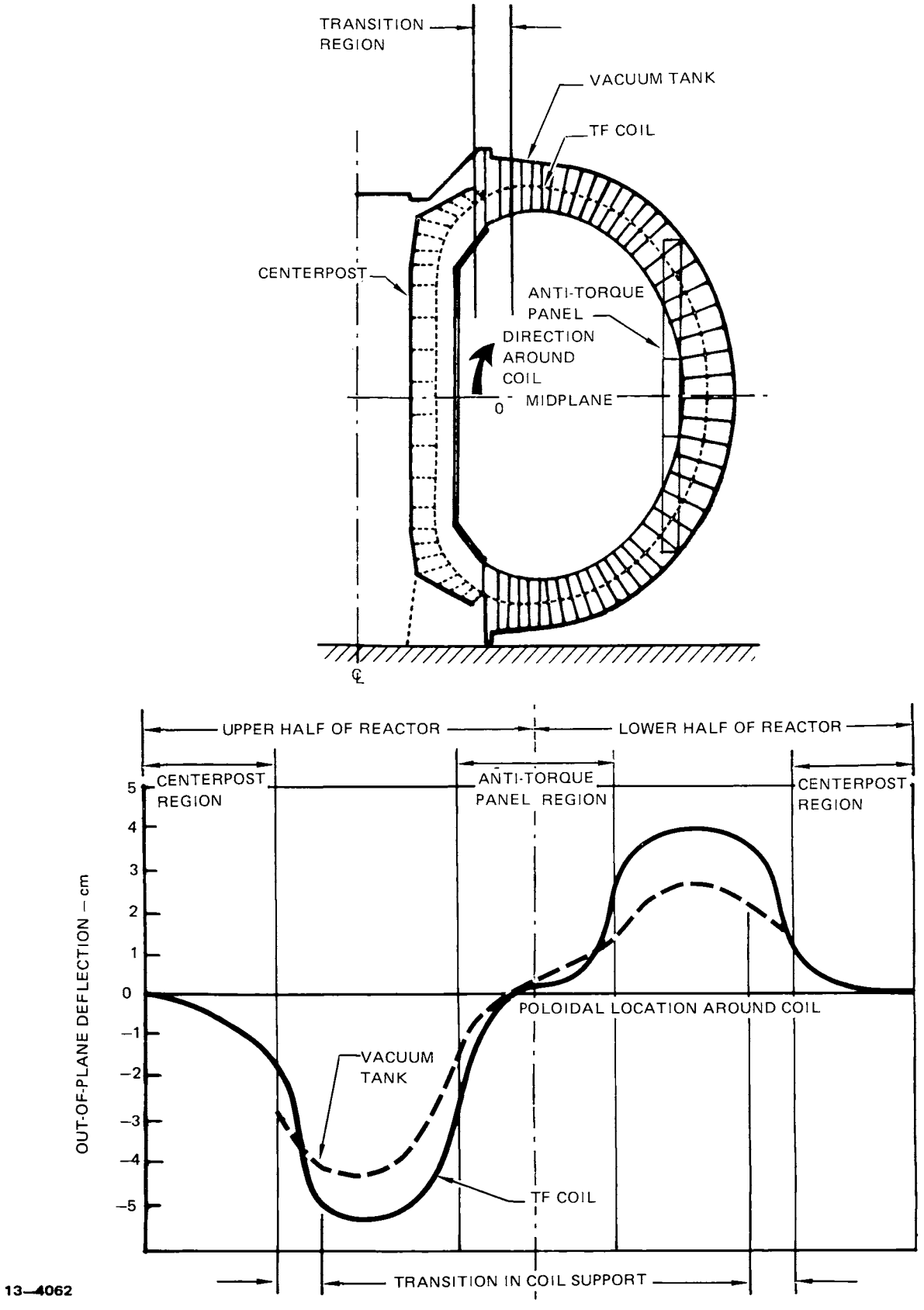

Figure 16-8. Out-of-plane deflections for TF coil helium vessel and vacuum tank.

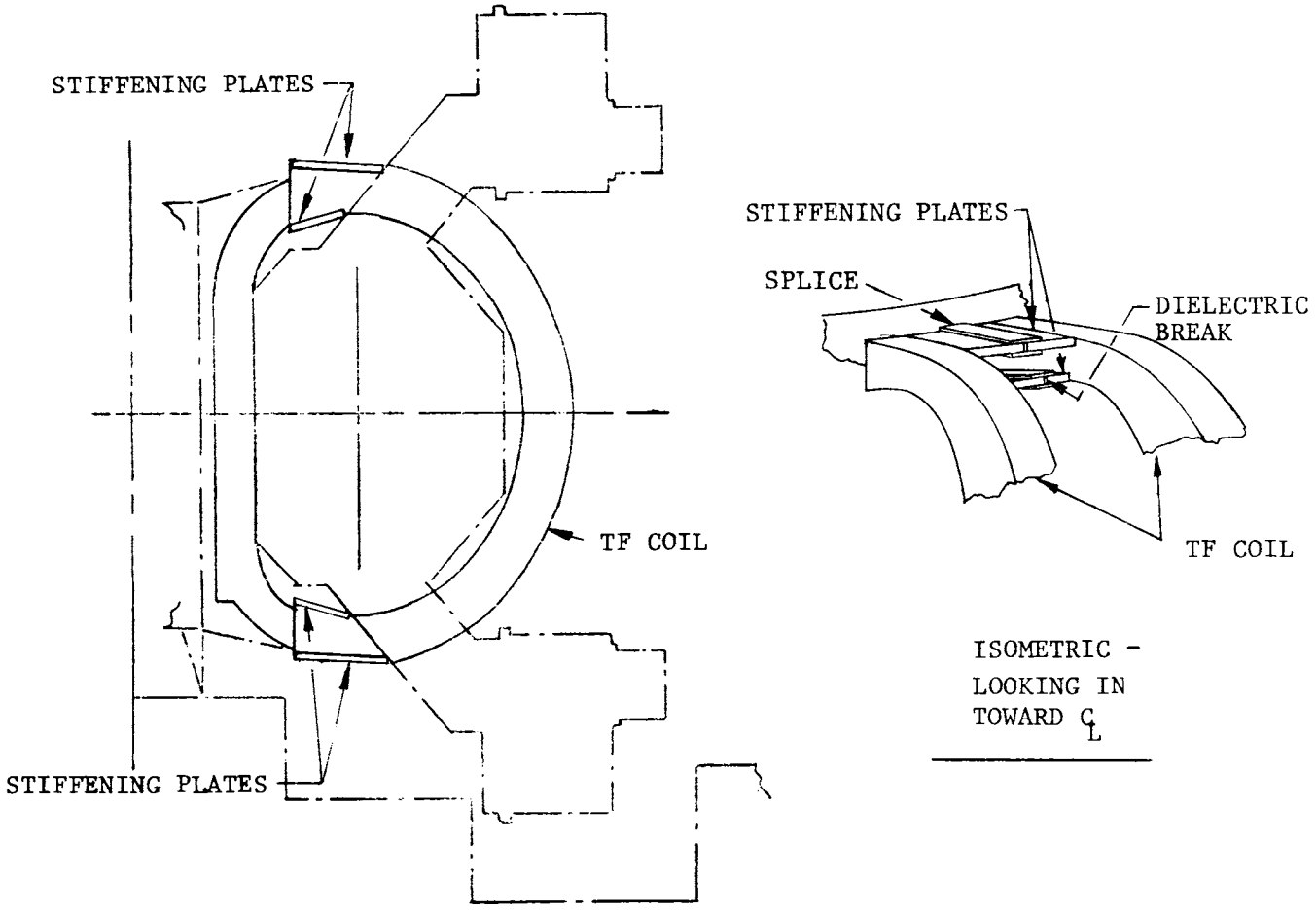

Figure 16-9. Conceptual design of optional stiffening plates.

not incorporate the permanent horizontal structural disk attached to the inside of the common dewar as described in Sec. 16.3.6. This disk is located in the plane of the upper TF coil vacuum tank outer surface and is expected to increase the effective bending stiffness of the vacuum tanks, particularly if the stiffening plates previously mentioned were added to the design.)

Stresses in the TF coil vacuum tank are the highest in the vertical sides of the tank. The distribution of stresses around the tank are shown in Fig. 16-10, for one side; stresses in the other side are of equal magnitude but have the opposite sign. The yield strength of Nonmagne 30 is 362 MPa (52.5 ksi) at 25°C. Stresses in the tank as analyzed slightly exceed the yield strength locally at the intersection of the common dewar and the TF coil vacuum tank in the upper half of the reactor; at this location the maximum stress level is 379 MPa (55 ksi). The peak stress in the tank in the

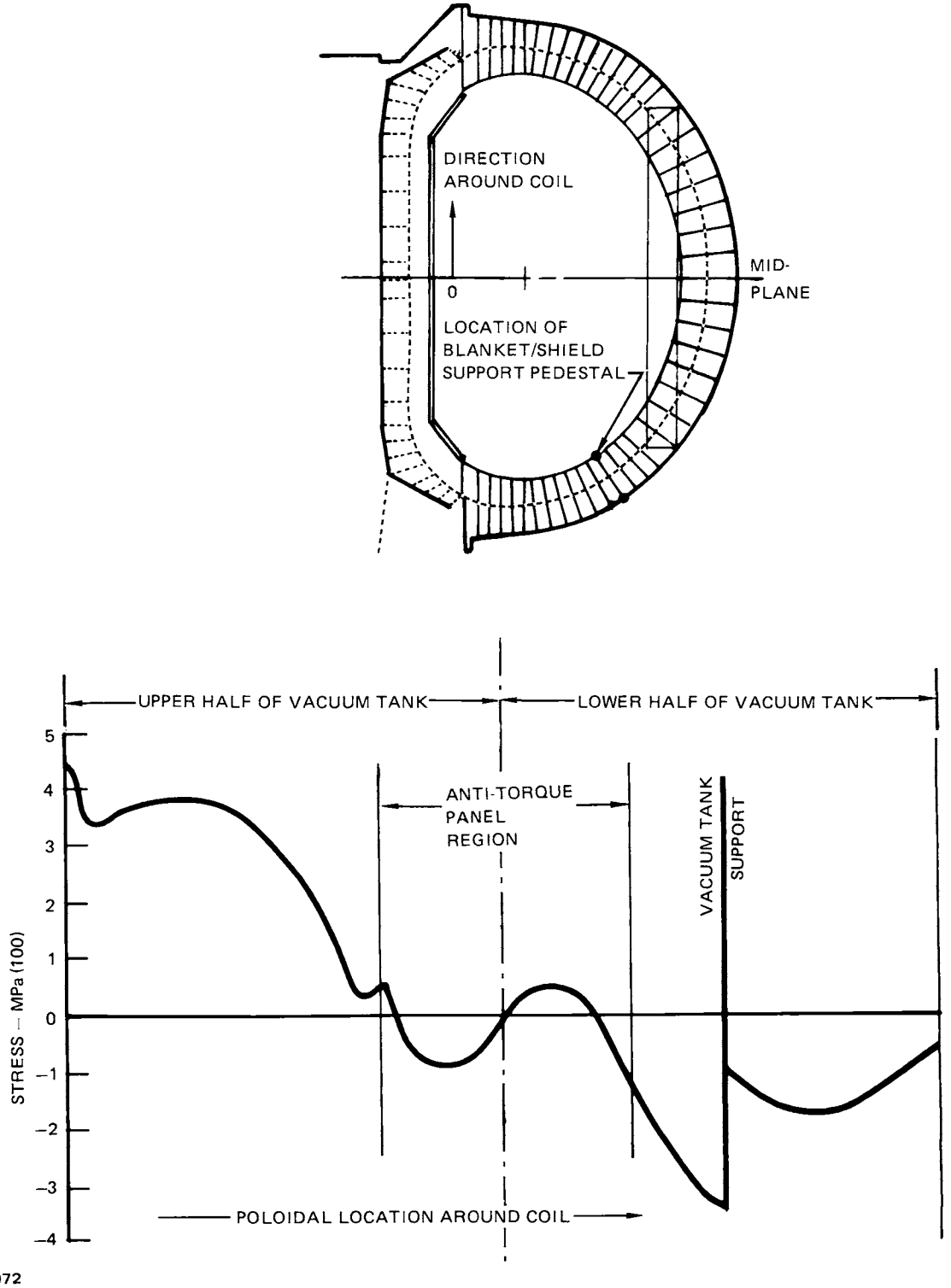

Figure 16-10. Distribution of stresses around TF coil vacuum tank.

lower half of the reactor is 345 MPa (50 Ksi) and occurs at the location of the blanket/shield support pedestal. These stress levels could be reduced by incorporating the same options previously discussed for reducing deflections.

The G-10 CR support struts were sized and spaced around the TF coil to maintain a stress level of approximately 276 MPa (40 ksi) in all struts. The room temperature tensile strength of G-10 CR is 415 MPa (60.2 ksi). In the region of maximum out-of-plane loading the struts will have to be nearly continuous (shoulder-to-shoulder) and have a thickness of 7.62 cm (3.0 inches). The stress level in these struts is 300 MPa (43.5 ksi). Further iterations of the design would include analysis of possible bending moment problems resulting from increased strut thickness, and alleviation of the higher-than-desired stresses by locally changing strut material to either titanium (which has high strength coupled with low conductivity) or a higher-strength nonmetallic.

(It should be noted that the type of model constructed did not permit the analysis of the steel brace frame option (Sec. 16.3.2) because of its nonsymmetry at the 0° and 30° planes of the model. Construction of a 30° model using the TF coil centerlines as the end planes would also not suffice because of the resultant nonsymmetry of the struts in the model between the helium vessel and tank. A full 360° model would be required; however, this model was not considered for the present study because of the high computing costs required for its analysis.)

16.4.2 Worst-Case Magnet Accident Evaluation

Of all possible off-nominal or accident situations for STARFIRE which are caused by and/or which affect the magnets, the case involving a single TF coil with no current was judged to be potentially the most destructive and the most difficult to contain.

For this case, the support structure system is required to keep the TF coils from undergoing large-scale uncontrolled toroidal motions which could result as energy from the coil is released during its discharge. Gross permanent deformations of the structure are considered acceptable if necessary. Although the faulted coil itself has low magnetic loads acting on it, the adjacent TF coils to either side experience a magnetic force distributed

unsymmetrically around the coil. Net force on each of these coils is 400 MN (90×10^6 lb); coils further away experience much lower loads.

The forces are equal above and below the midplane of the affected coils, and are concentrated primarily along the inner leg from the coil top and bottom to the midplane (Fig. 16-11). Forces along the vertical part of the inner leg would be reacted through the slot in the centerpost which holds the raised keyway on the helium vessel. To accommodate the loads, the keyway bearing surface area would perhaps have to be increased and a U-shaped steel section installed in the slot to take higher bearing stresses. The most important objective would be to ensure that the centerpost and/or its support struts were not damaged, since their replacement would require roughly the equivalent of disassembling and reassembling the entire reactor.

The forces acting on the coil from the ends of the centerpost slot to the top or bottom of the coil would be reacted primarily as equal and opposite torques on the centerpost flared extensions and through the beaming of loads by the vacuum tank/helium vessel combination to the anti-torque panel attach points. To avoid centerpost damage its thickness might have to be increased locally in the flared regions. The best solution is likely to

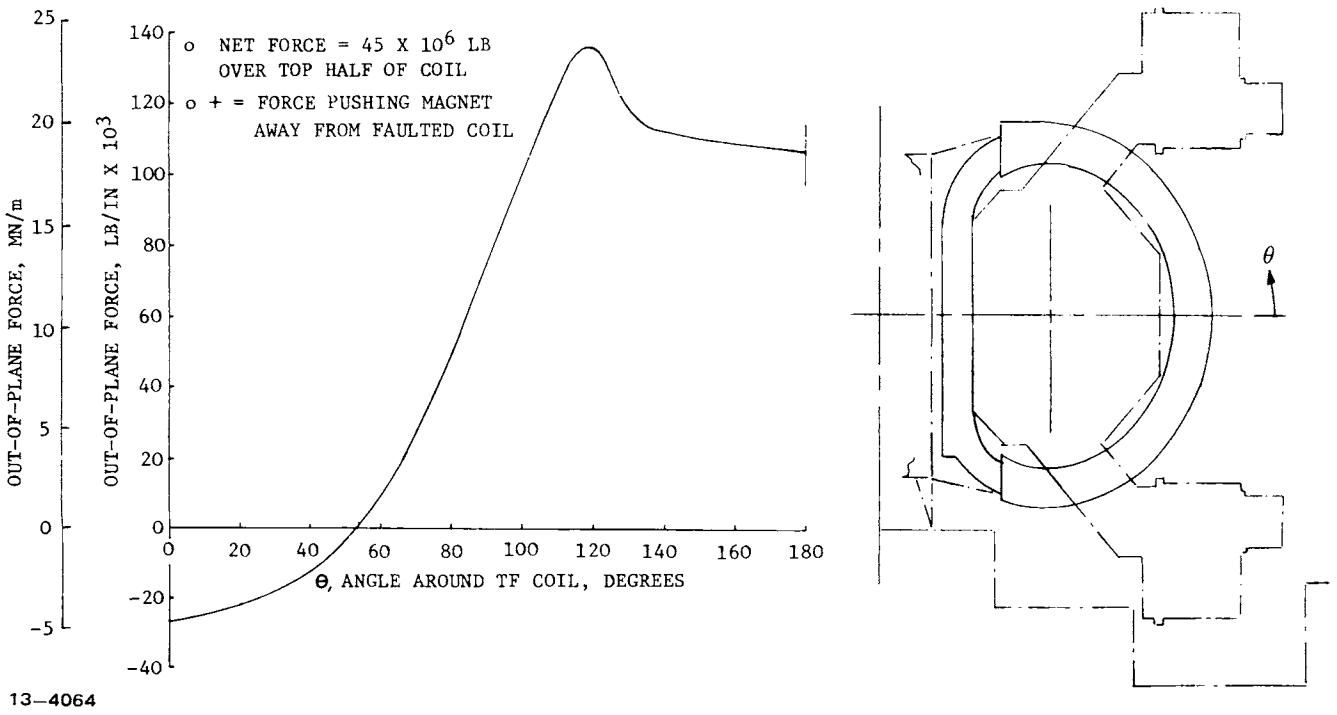

Figure 16-11. Out-of-plane forces on TF coils adjacent to faulted coil.

be the addition of the stiffening plates (Fig. 16-9) connecting adjacent vacuum tanks at the reactor top and bottom between the common dewar and the vacuum duct shield.

The out-of-plane forces on the eleven non-faulted coils in combination will produce a large lateral load, which results from vector summation of those components of the out-of-plane forces acting on the eleven coils which are parallel to the centerline of the faulted coil. This lateral load is balanced by the removal of the centering force of the faulted coil from the centerpost, so that the net lateral load on the reactor is zero.

A realistic evaluation of the structural response during a faulted-coil condition probably would require a complete 360° finite element model of the reactor support structure system, which would preferably incorporate elastic-plastic strains of structural elements. Such a model would not be significantly more difficult to construct than the 30° model used herein to elastically analyze the normal operating out-of-plane loads. The model would also enable investigations of the steel brace frame option as a possible replacement for the anti-torque panels. The principal drawback would be the relatively high cost of the computer time required for analyses with the model, particularly if elastic-plastic analyses were performed.

16.4.3 Seismic Analysis

Appendix D presents detailed results of a seismic evaluation of the STARFIRE reactor design. The evaluation was limited in scope to establishment of criteria and procedures required prior to design, and to seismic analysis of one particular subsystem, the TF coil cryogenic structure.

Parametric study results indicated that maximum horizontal displacement of the coil for Zone 2 requirements was ± 7.95 cm relative to the building floor. This is considered excessive since the accompanying stresses in the thermal isolation struts would probably exceed the assumed allowable of 276 MPa (40 ksi), 1/3 of ultimate strength at cryogenic temperature. In addition, axial dynamic response forces in the centerpost support struts exceed the critical buckling load capability, 42.7 MN (9.6×10^6 lb) compared to P_{cr} of 35.6 MN (8.0×10^6 lb).

The high loads in the thermal isolation struts can be accommodated through local design detail changes. Options include increased strut thickness or a change to higher-strength materials, or the addition of pads or "bumpers" to the inside surfaces of the vacuum tank (similar to those described in Sec. 16.3.1) to transmit helium vessel loads in bearing directly to the vacuum tank whenever vessel deflections significantly exceed those encountered in normal operation. Similarly, a parametric study indicated the centerpost support strut response can be adequately reduced by design detail changes to cross sectional area or by changing material. It should be noted that the support structure system analyzed had not previously been optimized with regard to seismic loads.

References

1. W. M. Stacey, Jr., et al., "Tokamak Experimental Power Reactor Conceptual Design," Argonne National Laboratory, ANL/CTR-76-3 (1976).

2. M. B. Kasen, "Mechanical Properties, Thermal Contraction, and Electrical Properties of G-10 CR and G-11 CR," Fracture and Deformation Division, National Bureau of Standards, Boulder, CO (June, 1979).

3. Kobe Steel, Ltd., Kakogawa Works, Kakogawa, Japan, Report No. A-78B20 (February, 1979).

4. NASTRAN, Finite Element Computer Code, MacNeal-Schwendler Corporation (May, 1976).

Table of Contents

		Page
17.1	INTRODUCTION AND SUMMARY	17-1
17.2	CRYOGENIC REQUIREMENTS	17-3
17.3	CRYOGENIC SYSTEM DESCRIPTION	17-4

List of Figures

Number		Page
17-1	CRYOGENIC SYSTEM SCHEMATIC	17-2

List of Tables

Number		Page
17-1	Liquid Nitrogen Requirements	17-3
17-2	Liquid Helium Requirements	17-3
17-3	Liquid Helium System Parameters	17-5
17-4	Liquid Nitrogen System Parameters	17-6

17.1 INTRODUCTION AND SUMMARY

The cryogenic system for STARFIRE is a single central system which supplies the required quantities of liquid helium and liquid nitrogen to the user locations near the reactor and in the fueling facility. By far the largest cryogenic requirement is for the superconducting toroidal field coils with lesser requirements for the superconducting portion of the EF/OH coils, the fueling and tritium processing system, and the vacuum system cryopumps. The cryogenic system is a relatively straightforward system requiring no new technology, but should benefit from probable future improvements in reliability, economy and operating efficiency.

Cryogenic refrigeration is supplied at two temperature levels. Vaporization of liquid nitrogen at 80 K is used for thermal shielding of the liquid helium cooled components and precooling of warm helium gas in the helium refrigerator-liquifier. This liquid nitrogen is supplied to the user systems from a central pressurized storage dewar. The nitrogen gas is returned to the closed cycle nitrogen liquification plant where it is condensed and returned to the supply dewar. The nominal liquifaction capability of the nitrogen plant is 1,500 ℓ/h and is allocated as shown in Table 17-1.

Refrigeration at 4.2 K is supplied to the users by pumping liquid helium from the central LHe storage dewar through LN_2 shielded vacuum jacketed transfer lines to the location of the component requiring cryogenic refrigeration. The liquid helium is vaporized and returned to the central helium refrigerator-liquifier as either cold or warm gas depending on the user requirements. The return helium gas is liquified and returned to the central supply dewar. The nominal liquifaction capability of the liquid helium system is 26.5 kℓ/h and is allocated as shown in Table 17-2. A large medium pressure helium gas storage facility supplies make up gas to the system and is used to store the helium when the cryogenic system is warmed up.

A schematic diagram of the STARFIRE cryogenic system is shown in Fig. 17-1. The major system parameters are listed in Table 17-3 for the liquid helium system and Table 17-4 for the liquid nitrogen system. The physical location of the major components is shown on the plant layout drawings in Chap. 20.

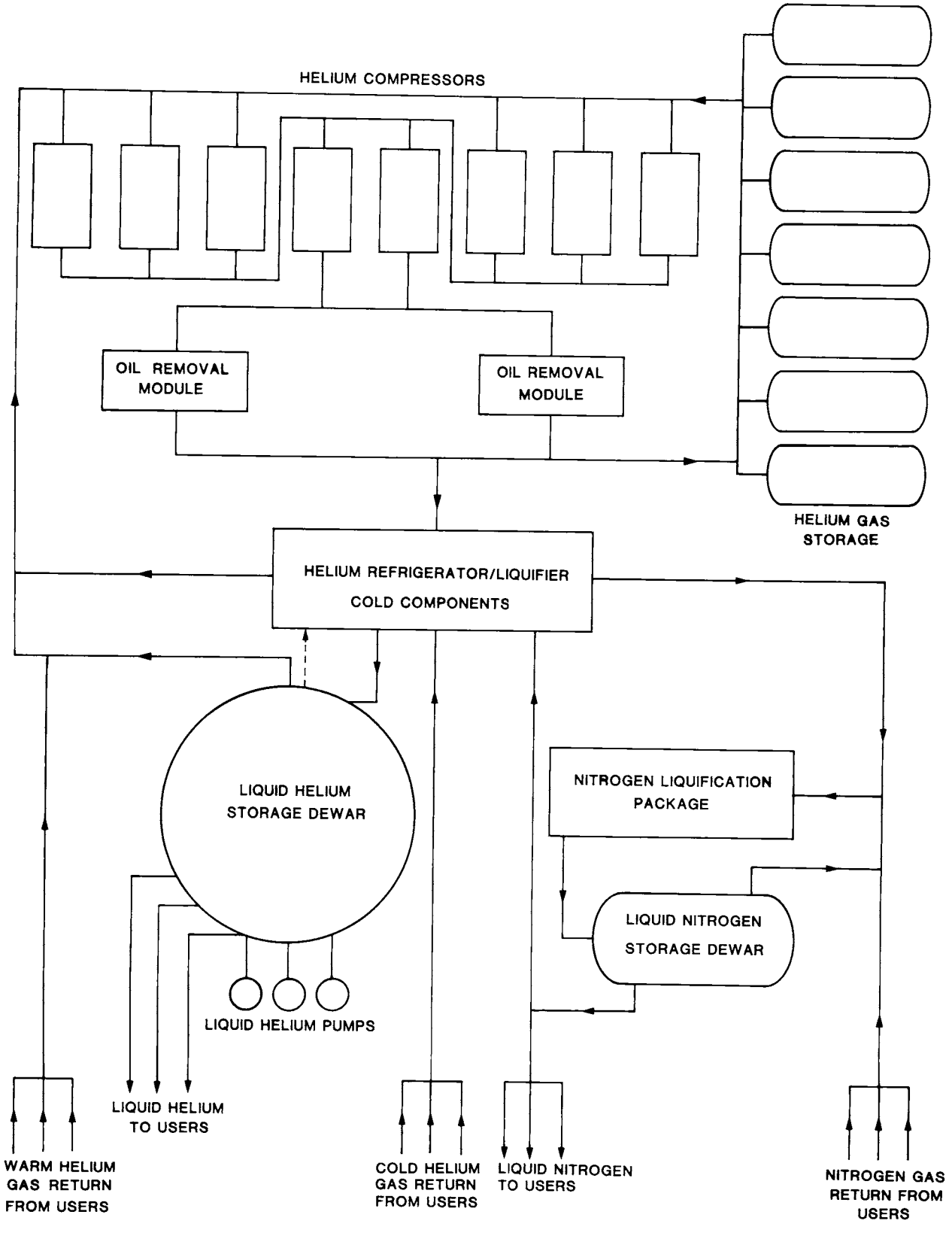

FIGURE 17 – 1 CRYOGENIC SYSTEM SCHEMATIC

17.2 CRYOGENIC REQUIREMENTS

Refrigeration requirements for the 4.2 K liquid helium system and the 80 K liquid nitrogen system were determined by the individual system designers. The following requirements were used to size the cryogenic system described in the next section.

Table 17-1. Liquid Nitrogen Requirements

Helium Liquifier - Refrigerator	900 ℓ/h
TF Coils	100 ℓ/h
EF/OH Coils	50 ℓ/h
Fuel Processing	125 ℓ/h
Vacuum System	50 ℓ/h
Transfer and Storage Losses*	150 ℓ/h
Margin (10%)	125 ℓ/h
Total	1,500 ℓ/h

*Includes losses associated with shielding the liquid helium transfer lines.

Table 17-2. Liquid Helium Requirements

TF Coils	15,000 ℓ/h
EF/OH Coils	6,600 ℓ/h
Fuel Processing	1,500 ℓ/h
Vacuum System	400 ℓ/h
Transfer and Storage Losses	600 ℓ/h
Margin (10%)	2,400 ℓ/h
	26,500 ℓ/h

Most (>90%) of the return helium gas will be returned to the liquifier refrigerator near liquid helium temperature.

17.3 CRYOGENIC SYSTEM DESCRIPTION

The major components of the STARFIRE cryogenic system are shown schematically on Fig. 17-1. The design of the system is generally based on present day technology. Some improvements in reliability and efficiency are likely before the time that STARFIRE is anticipated to be built. The liquid helium system shown on Fig. 17-1 with the parameters listed in Table 17-3 has the following major components:

Helium Compressors -- Several large helium compressors with aftercoolers and oil removal equipment are required for the helium liquifier. Total required power for the compressors will be about 6 MW based on 20 kW of refrigeration with a coefficient of performance of 0.00333 overall. The anticipated compressor package would consist of several rotary screw compressors arranged in both parallel and series flow to provide helium gas at about twenty atmospheres. These compressors would also be used to fill the gaseous helium storage tanks when the helium system is warmed up.

Helium Gas Storage System -- Because of the value of the helium inventory in the cryogenic system a means of storing the helium in gaseous form is necessary. The helium gas storage system is sized to store 70,000 std m^3 of helium which is equivalent to 100,000 liters of liquid inventory. A maximum gas storage pressure of 20 atmospheres is chosen so the refrigerator compressors will be capable of filling the system. The cost of this large, expensive system will be easily recovered by saving the system inventory of helium.

Helium Refrigerator-Liquifier Cold Components -- The heat exchangers, expansion engines, helium purifiers, and other components of the helium liquifier-refrigerator which operate below ambient temperature will be mounted in insulated vacuum jacket vessels. Although shown as a single block in the schematic, it is likely to consist of several separate vessels for economic and improved maintenance reasons. Up to 900 ℓ/h of liquid nitrogen will be used to cool the helium from 300 K to 80 K in the liquifaction cycle.

Table 17-3. Liquid Helium System Parameters

PARAMETER	VALUE
Design LHe Supply Rate	26,500 ℓ/h
Refrigeration at 4.2 K	20,000 watts
LHe Storage	100,000 liters
Helium Gas Storage	70,000 STD. m^3
Power Required:	
a. Helium Compressors	6 MW
b. Controls and Instrumentation	10 kW
Compressor Cooling Water:	
a. Cooling Load	6 MW
b. Flow Rate	8,000 ℓ/min.
c. Inlet Temperature	25°C
d. Inlet Pressure	0.4 MPa
Liquid Nitrogen Requirements for LHe System:	
a. Nominal Flow Rate	900 ℓ/h
b. Inlet Pressure	0.25 MPa
c. Outlet Temperature	300 K

Liquid Helium Storage Dewar -- A 100 kℓ dewar is used to allow for supply and demand differences in the liquid helium system. This would allow about four hours of liquid helium supply in the event of zero output from the liquifier. With cold box components designed with several elements in parallel, the liquifier could operate at reduced output while a part is being repaired or replaced and the storage dewar could make up the difference for a much longer period of time. The helium storage dewar will operate at a pressure of one atmosphere absolute.

Liquid Helium Transfer System -- Liquid helium will be supplied to users by pumps with the helium sub-cooled to 4.2 K after pumping in a heat exhanger inside the storage dewar. Separate transfer lines to each superconducting coil will probably be required so that a transient in one coil will not affect the others. The separate lines, including the cold helium return

lines, can be installed in a common vacuum jacketed liquid nitrogen shielded transfer pipe.

A packaged nitrogen liquification system with the parameters listed in Table 17-4 can be used for the 80 K refrigeration requirements. A 40 kilo-liter storage dewar will supply LN_2 for over 24 hours with the liquifier not operating. The initial nitrogen fill as well as make up nitrogen will be supplied as LN_2 to the storage dewar. A dewar pressure of 0.3 MPa is used to transfer LN_2 to the user's systems.

Table 17-4. Liquid Nitrogen System Parameters

PARAMETER	VALUE
Design LN_2 Supply Rate	1,500 ℓ/h
LN_2 Storage Dewar:	
a. Capacity	40,000 liters
b. Operating Pressure	0.3 MPa
Power Required:	
a. Nitrogen Compressors	1,000 kW
b. Controls and Instrumentation	10 kW
Compressor Cooling Water:	
a. Cooling load	1,000 kW
b. Flow Rate	1,500 ℓ/min.
c. Inlet Temperature	25°C
d. Inlet Pressure	0.4 MPa

Table of Contents

		Page
18.1	INTRODUCTION AND SCOPE	18-1
18.2	TECHNOLOGY PROJECTION	18-1
18.2.1	Basic Assumptions	18-1
18.2.2	Contributing Technologies - - 1940/1980/2020	18-2
18.3	STARFIRE REQUIREMENTS	18-13
18.3.1	Process Instrumentation	18-13
18.3.2	Plasma Instrumentation	18-18
18.4	STARFIRE I&C CONCEPTUAL DESIGN	18-19
18.4.1	System Performance Requirements	18-19
18.4.2	Network Architecture	18-19
18.4.3	Integrated Safety System	18-24
18.4.4	Redundant Elements	18-24
18.4.5	Modular Instrumentation	18-25
18.4.6	Wireless Data Links	18-26
18.4.7	Remote Maintenance	18-26
18.5	PROBLEM AREAS	18-27
18.5.1	Radiation Environment	18-27
18.5.2	Plasma Access	18-28
18.5.3	Plasma Instrumentation	18-29

List of Tables

Number		Page
18-1	Process I&C Control Requirements	18-14
18-2	Plasma Instrumentation Requirements	18-18

18.1 INTRODUCTION AND SCOPE

It is particularly difficult to specify exact details of the STARFIRE Instrumentation and Control System. For one thing, the I&C System is critically dependent upon the detailed requirements and capabilities of the other STARFIRE systems which it controls and with which it must interact. Further, it is extremely difficult to forecast in detail, from the limited vantage point of 1980, the capabilities of the I&C technology available to the system implementer in the year 2020. The technologies which contribute to instrumentation and control capabilities -- computers, electronics, display, control theory, artificial intelligence -- are among the most rapidly evolving in our society. The literature of computers or electronics, for example, is littered with the wreckage of learned predictions on the shape of things to come over a mere decade or less, not to mention the better part of a half-century.

In light of these difficulties, it therefore seems more appropriate to concentrate upon the broad outlines of the I&C System. Despite the obvious pitfalls, some attempt is made to predict the trend, if not the details, of future I&C technology as it relates to the requirements of STARFIRE. And, although it is obviously fruitless to attempt to list transducers and sensors system by system, wire by wire, it is instructive to list the types of measurements and control to be encountered. Comparison of the tools predicted to be available with the general problem to be solved finally produces an opportunity to examine any obvious I&C problems or shortcomings which will require attention in the intervening years in order to have the required solutions available when needed.

18.2 TECHNOLOGY PROJECTION

18.2.1 Basic Assumptions

The underlying assumptions used in projecting the I&C design for STARFIRE are as follows:

1. Technology will continue to develop along the lines of "Hard" or "High" Technology.
2. Government and commercial forces will continue to exert their present forces upon technology.
3. STARFIRE represents a truly mature fusion technology and engineering design.

18.2.2 Contributing Technologies -- 1940/1980/2020

As noted above, the STARFIRE I&C system is expected to be developed from contributing technologies which are considerably advanced from their present state, and which exist at that time in response to needs and forces much stronger and more pervasive than merely those of the fusion energy program. In order to form some idea of the choices available to the I&C System designers, it is necessary to project developments in some of these technologies up to 40 years into the future.

To do this, it is necessary to gain some notion of the distance these related technologies will travel, and the direction they will take. To gain the required feel for distance, some historical perspective will be invoked; a look backward 30-40 years will give some notion of the distance which can be travelled in such a time. Consideration of recent trends will be used to attempt to discern the direction a particular technology is headed.

The term "Process Control" is used to refer to the ability to perform control centrally over a complex process, with the implication of a considerable extent of automation. It may be something as simple as control of the temperature of a room or furnace, but in the case to be considered here the processes of interest are more complex. Many requirements are similar: sense one or more parameters, display some or all of their values in engineering units to a human operator, accept operator commands, and take action to maintain the parameter(s) at some commanded value. In addition, many systems maintain historical records, present and record alarms, and provide varying degrees of automatic control.

Looking back to the 1940's, this technology was largely based upon mechanical and pneumatic systems. Instruments were largely pneumatically driven chart recorders, many with clockwork chart drives; control involved

setting mechanical dials or knobs, which transmitted their settings mechanically or pneumatically to feedback controllers capable of controlling a single loop or value. Control room size was dictated by the amount of panel space required for the charts and knobs and handles and dials. Records were produced by crews which noted meter readings, dial settings, and manual summaries of status, together with rolls of chart paper collected periodically.

Any computation necessary for control was performed by analog elements, most of them mechanical in nature. Electrical quantities were indicated on iron vane or D'Arsonval meters, or in cases where great sensitivity was required, on galvanometers. Electronic instruments were available, using vacuum tubes, but were relatively expensive, required frequent adjustment to compensate for drift, and prone to failure. Because extensive human interpretation and interaction were required to integrate the operation of all subsystems in a large plant, the size and complexity of the process which could be controlled were critically limited by the amount of information which the operating crew could absorb and act upon. Operating crews were large, trained for many years on the equipment they operated, and extremely limited in their ability to operate other plants, even those with a similar function. Control systems with several hundred input and output parameters were considered complex, and a plant with 20 or so automatic control loops, with a few of these loops interconnected, was considered highly automated.

In 1980, the technology of process control has become largely electronic, with centralized digital computers performing monitoring, logging, normal and exception reporting, complex performance calculations, and in some cases direct digital control, and in other cases supervisory setpoint control, of plant parameters. The most advanced systems perform small perturbations of various plant parameters, using the results to learn how to optimize plant performance. Loop controllers are all electronic, the majority digital, some with their own built-in microcomputers; all with provisions for computer setpoint control. Information is displayed to plant operators electrically or electronically increasingly in digital form, with an accelerating trend toward graphic aids such as bar charts or diagrams. Fixed plant

diagrams with lights and meters, covering whole walls, are now being replaced by cathode ray tube (CRT) displays, increasingly in color, which bring a diagram of the process or plant directly in front of a seated operator, with ability to "zoom in" on any desired level of detail.

A typical power plant now has several thousand signals monitored and controlled, and several hundred automatically controlled loops when various auxilliary systems are considered. Costs of electronics is tending to hold steady or even drop, particularly relative to inflation, because of increasing use of integrated circuits, and replacement of circuit functions with micro-computer programs. However, this tendency is largely offset by a tendency to provide measurements of greater accuracy or sophistication. And the tendency for the cost per measurement to drop is offset by the rising number of signals measured and parameters controlled.

While hardware costs in general decline, one component of measurement and control tends to assume increasing importance, and that is the cost of labor to install I&C hardware. If wires are carried all the way between transducer and control room, with several intermediate terminal boxes, and in the case of a containment building, wiring penetrations, costs can now approach $1000 per signal. With signal interface costs in the $100-200 range, it is clear that installation is the element of cost requiring greatest attention. This is presently being done with the introduction of electronic digital signal multiplexing systems, which digitally encode signals near their source or destination in the plant, and transmit many hundreds or thousands over a few pairs of wires to the control room.

18.2.2.1 Electronics

Some of the aspects of electronics touching upon the I&C technological environment for STARFIRE have already been mentioned, for the subject is pervasive. The present era is sometimes described as "The Electronic Age," and of all the applicable technologies it is perhaps the one most difficult to project into the future.

The reason for this may be easily comprehended by recalling the state of electronic technology in 1940. At that time, the principal electronic element was the vacuum tube, with its requirement for a heated cathode and anode voltage of a hundred volts or more. It was mechanically fragile, bulky, hot, a waster of power, subject to steady change in characteristics over its operating life, and with an expected life of a few thousand hours at most. Instruments built of these components would inevitably be bulky, fragile, prone to drift, and unreliable.

The transistor was born in the early 50s and the integrated circuit became available in quantities first in the middle '60s. This has in turn produced a revolution in the type of electronic instrumentation available, in terms of sophistication, accuracy, reliability, and cost. So sophisticated has the integrated circuit technology become, that, with the exception of digital computers and memories, IC manufacturers are now having trouble identifying markets capable of utilizing the combination of sophistication and volume which they can now produce. In such an environment, it is likely that future developments will be evolutionary, with new capabilities generating new markets, which then require further sophistication.(1)

This does not preclude development of some entirely new electronic phenomena. Few in 1940 could have foreseen the transistor, much less large scale integrated circuits. Some new family of devices may remain to be developed and provide similar revolutionary capabilities. In this category, perhaps, are superconduction devices, either room temperature or cryogenic, with unheard of speeds, reduction in scale, or other capabilities.

One cloud lurks on the horizon. The old vacuum tube, for all of its faults, was relatively immune to ionizing radiation. The same cannot be said of semiconductors. The recent emphasis on reduction in size and increase in sophistication of integrated circuits has brought the size of the internal elements down to the size where the number of minority carriers in a single active element is comparable to that generated by the incidence of an ionizing particle. Such particles exist, of course, in cosmic rays and even, as it turns out, as decay products of common trace isotopes in the plastic cases used to encapsulate ICs. Such events in analog circuits merely produce noise spikes and are gone. But in digital elements, such as a memory,

information may be permanently altered, resulting in truly mysterious and unreproducable behavior. The villain in this piece is the shrinking size of the active elements in the ICs: the more functions packed onto a chip, the smaller the individual elements and the more susceptible to radiation it becomes.

18.2.2.2 Computers

It is easy to summarize the state of computer developments in the year 1940 -- there weren't any! Considering the present-day ubiquity of the computer, it is sometimes hard to remember that the modern general purpose stored program digital computer was not invented until the late 1940s, and was not commonly available even to members of the academic community until the middle 1950s. In 1980, by contrast, it is possible to buy roughly equivalent computing power to a large 1950s computer at your neighborhood computer store for $1000 or so.

Today's high-performance computers are, very roughly, three orders of magnitude more powerful, in terms of speed and quantity of information accessible on-line, than those first commercially available at prices which are, again very roughly, comparable to those of the '50s.(2) Alternatively, the same level of performance is available at prices roughly three orders of magnitude less. It is this lower portion of the computing spectrum which is now the cutting edge of the "Computer Revolution," placing programmable intelligence behind the front panel of increasing numbers of otherwise ordinary instruments and human interfaces, from signal generators to sewing machines.(3)

This same computer technology, which has been able to improve computer performance by three orders of magnitude in three decades at the same price, has been able to take the four-function desk calculator, a mechanical marvel of the '40s and '50s then selling for a thousand dollars, and reduce it to the pocket calculator available in a blisterpack at the supermarket for $7.95 or less. The only difference is that the $7.95 model is smaller, lighter, more easily portable, more reliable, and produces its answers (particularly for division) much faster.

In the middle of this spectrum, between the super-computers and the micro-computers, are the so-called minicomputers. This class has always been a mainstay of process control technology. With input/output speeds comparable to a large computer, but with reduced computing speed and architectural sophistication, they are ideally suited to monitoring and controlling large numbers of signals in a modern process such as an electrical power plant. While they tend to lag several years behind the large computers in capability, they in effect sell a more mature technology at a large discount, traditionally in the $10,000 to $100,000 range, with more machines and higher performance tending to slip steadily toward the bottom of this price range.

It will be difficult to maintain the trend of an order of magnitude increase per decade in performance for high-performance computers over the next three or four decades. Whereas heretofore the primary limitation on speed has been the switching speed of the electronic circuit elements used the next order of magnitude increase in speed will encounter limitations in signal transmission times along interconnecting wires. Raw circuit speed will no longer suffice to increase computing power and more fundamental changes will be necessary.(4) Possibly some new technology will emerge, such as superconducting elements and/or entirely novel and smaller physical packaging.(5) Equally likely, however, will be new computer architectures based upon a high degree of parallelism.

Parallelism has been tried already, in such processors as ILLIAC IV and STAR, with only modest success. The reason is that problems tend to arrange themselves so that it is necessary to begin at the beginning and proceed sequentially to the end, the so-called "Marching Problem."(6) In fact, this may not be any characterisitic of the real world at all, but merely the way in which the human mind organizes it. In any event, the knowledge required to utilize a computer capable of proceeding on a thousand parallel approaches to a calculation is only now being painfully acquired.(7)

Interestingly enough, one area of obvious application for parallel processing is process control. Here, thousands of signals require the same repetitive operations performed upon their values, and data bases represent the same multi-thousandfold symmetry. This may imply that early approaches

to utilizing a new computing architecture may come from the field of process control, and be readily applicable to some aspects of processes such as STARFIRE.

18.2.2.3 Display and Control

While present-day computers are able to organize plant information and use it to perform increasingly sophisticated control functions, few are suggesting that control rooms will function at any time in the future without human supervision. However, as a result of the more sophisticated control being exercised, more sophisticated information must be exchanged with human operators to allow them to properly exercise judgement concerning any process. The interface with the human is thus assuming increasing importance.

Four decades ago, the control room required a light, dial, or meter for every signal monitored, and a knob, button, or lever for every parameter controlled. The human eye and ear were the only means of output. Under those circumstances, as process variables passed the dozens and headed for the hundreds, it became essential to group information meaningfully, into rows of dials, lights, meters, and controls, and to draw attention to the most important by means of flashing lights or audible signals. Probably the first people to confront this were aircraft cockpit designers; certainly they were among the first to use the term "Human Engineering" to refer to logical placement and grouping of instruments and controls, to permit information to be assimilated as rapidly as possible and controls to be actuated with minimum chance of error, with due regard to normal human reach, range of vision, and response times. In a plant control room, increasing complexity brought problems of assimilating essential information and taking necessary action as related pieces of information were separated by tens of feet and buried among similar pieces of information over hundreds of square feet of panel space.

The present emphasis in display/control technology is to bring to a comfortably seated plant operating crew, information in compact summarized form, with provisions for inquiry to any depth of detail. Present technology makes extensive use of graphic and/or colored diagrams and pictures, with use of numerical information kept to a minimum unless requested by an operator.

Controls make use of these same CRT screens, with information manipulated by means of touching the screens directly or through the use of natural hand/eye tools such as joysticks or trackballs. Use of this technology depends heavily upon underlying computer intelligence to select and summarize information, determine normal and abnormal signal readings for various plant operating modes, and correctly separate cause from effect in abnormal situations and quickly present these conclusions.

Present problems in this approach are not involved so much with the display technology, but in the underlying intelligence required of the control system and its designers. The necessary programming determination, state analysis, and presentations graded by importance, do not presently exist to allow this to be done in real time, and analysis techniques to perform this in advance of need are hit-or-miss.

Future development in display control technology will be directed toward making the man/machine interface more natural. Recent developments in speech generation and recognition should in the next decade make possible meaningful spoken dialog between operator and control system.[8] This should serve to make the transfer of commands from operator to control system faster and, in the final analysis, simpler and less prone to error. Display technology itself is moving toward larger and higher resolution displays, while the computing power to generate more meaningful displays grows more common. In particular, flat television-like displays of arbitrarily large size appear possible within the next decade or so, which will make possible complete replacement of fixed wall-size displays with computer generated and updated ones.

The obvious trends, which will form the background for display/control technology by the time of STARFIRE, virtually guarantee that the control room form dictated by the needs of the hardware will be replaced by one whose form is dictated by the needs of the plant/operators and supervisors. Acceptance of this type of control is growing since there is no acceptable alternative to strengthening the man/machine interface to achieve proper control.

18.2.2.4 Remote Handling

Remote handling technology has grown simultaneously with nuclear research and particularly with nuclear fission power plants. Up until this time, however, much of this technology has consisted merely of mechanical and electro-mechanical slave equipment, more suitably described as remote manipulators.

A somewhat different technology has developed in recent years, oriented toward industrial production rather than operation in hostile environments. This equipment is generally known as industrial robots, and features computer-controlled servomechanisms, in many cases capable of being "taught" by unskilled operators to perform repetitive operations, such as spray painting or picking objects up from one conveyer belt and transfering them to another. This capability is now being combined with sophisticated image processing techniques to allow such machines to "see" what they are doing, to recognize parts of differing sizes and shapes in various orientations, and to "feel" through feedback sensors when they encounter resistance in grasping or lifting.[9]

This development is taking place in response to pressures from the commercial market. The automobile industry is interested in such machines, for example, because they can be retrained to assemble various auto models and reprogrammed for requirements of new model years, without loss of investment. A logical extension of this capability, moreover, during the next four decades could easily produce a family of machines capable of performing complex tasks in a hostile environment such as the STARFIRE Reactor Building.

18.2.2.5 Control Theory

Control theory in the 1940s and '50s was concerned with the establishment of stability criterion for individual servomechanism loops, using mechanical and electrical/electronic components, and analysis tools largely suited to linear systems. As better tools for stability analysis were developed, it became possible to optimize loops for speed of response or accuracy, and to take better account of the effects of nonlinear elements. As better components, particularly electronic ones became available, more

elaborate methods of performance optimization and better accuracy became possible.

The advent of digital components and computing elements introduced the possibility of "intelligent" modes of control, and also required development of techniques for analysis of systems where data flow, instead of being analog and continuous, became quantized, and available only at discrete time periods. The components of such sampled data systems, along with their digital nature, became more reliable and less prone to drift and noise.

The largest change, however, has been in the possibility for intelligent or "adaptive" control. In individual control loops, intelligent computing elements could periodically measure response values of various loop components and change loop computing parameters to compensate for effects of aging or wear of these components. On a larger scale, the performance of large subsystems or entire processes could be measured, automatic "experiments" made to vary individual settings and observe the effects on the entire process, and incorporate various intelligent strategies based either upon measured inputs or human direction. This type of adaptive control work continues, some of it of considerable theoretical complexity, and requiring large amounts of computing power to implement.

Another area of continuing evolution has been in loop control elements themselves. The basic three-mode loop controller, incroporating settable gains for linear, differential, and integral feedback of the controlled variable in analog circuitry, has evolved over the last two decades from a free-standing device with knob or screwdriver setting of the various gains and meter display of the controlled variable, to a digital module, frequently incorporating a microprocessor, with computer controllable setpoints, delivering its measurements in digital form to the same computer, and possibly containing its own complex optimization program internally. In some cases, this controller is starting to migrate from the control room to the vicinity of the measured variable itself, so that only summary information needs to be returned to the control room.

This process of intelligent individual loop control is driven by the declining cost of digital versus analog integrated circuitry, and by the

plummeting cost of small microprocessors. It is coupled to the increasing sophistication of analysis and optimization tools, which are now suited particularly to computer and microcomputer control, and it is logical to expect this trend to continue.

18.2.2.6 Plasma Diagnostics

The development of plasma diagnostics has been a fairly recent technological phenomenon. At the present time, techniques are in a rapid state of development and improvement, and only a few general statements can be made which would be relevant to the expected state of the technology in 40 years.

Many of the techniques involved with measurement of plasma temperature and/or density involve the use of laser and microwave equipment. This equipment generally is in a state of rapid improvement as regards reliability, performance, and convenience of installation and use, as better components and systems become available. Microwave equipment particularly is benefiting from emphasis in commercial design from attempts to expand communications bands into less crowded portions of the electromagnetic spectrum.

Plasma diagnostics are also becoming more dependent upon computer analysis of data. The data from many, if not most, is impossible to interpret, even qualitatively, without extensive computation. The tendency is for this computation to be performed by small mini- or microcomputer systems dedicated to each diagnostic instrument or measurement, displayed graphically, and forwarded to a larger system for storage and possible later analysis. This trend is accelerating as more capable minis and micros appear at low cost, and even small specialized processors, such as array processors, become available.

18.2.2.7 Summary

To summarize, the design of the Instrumentation and Control System for STARFIRE makes the following assumptions about the applicable technology available for incorporation:

1. Computers will be available with roughly three orders of magnitude greater power, in a spectrum of sizes and at prices comparable to those of 1980.

2. Process measurement technology will use light or microwave technology for transmission from instrument to local data concentrators, and large scale multiplexing for communication with a central site.
3. Electronic circuits will have as much or more susceptibility to electromagnetic and ionizing radiation than comparable present-day modules.
4. Display technology will be reduced in size to the point where control room design will be dictated by human factors, such as visual resolution and vision angles.
5. Voice response systems will largely eliminate the requirement for hand-activated controls.
6. Commercial remote handling equipment with substantial self-contained intelligence will be available.
7. Control and optimization techniques for complex processes will be in common use.

18.3 STARFIRE REQUIREMENTS

I&C requirements for STARFIRE may be conveniently grouped into two categories; those which may be considered more or less conventional process and balance of plant instrumentation, such as temperatures, pressures, flows, valve positions, power settings, etc.; and measurements made upon the fusion plasma and requiring highly specialized instruments, such as plasma position, shape, internal structure, temperature, etc.

18.3.1 Process Instrumentation

The types of measurements needed for each subsystem are listed in Table 18-1. As may be noted, individual sensor quantities are not estimated, in keeping with the conceptual nature of this design. A total number of 50,000 signals has been assumed, based upon an increase of the number of signals in a modern electric power plant by an order of magnitude.

This factor is based upon the tendency on the part of operating personnel to have additional plant information, balanced by the design and construction costs associated with supplying them. As signal measuring and control hardware becomes cheaper, it becomes economically justifiable to supply the increased instrumentation. In addition, in order to enhance maintainability of systems located in the reactor building, redundancy on the order of a

Table 18-1. Process I&C Control Requirements

Subsystem	Major Component	Measurement Type	Problems
1. Plasma Heating	Gyrotron Cooling	Temperature	
		Water - Pressure	
		- Flow	
		- Temperature	
	Gyrotron Magnet Cooling	Temperature	
		Cryogenic - Pressure	
		- Flow	
		- Temperature	
	Transmission Line	Temperature	
		Nitrogen - Pressure	
		SF6 - Flow	
		- Temperature	
	RF Power	Wave Guide - Power	
		- Exit Phase	
		Power - Input	
		- Output	
		- Absorbed	Access to plasma
2. Impurity Control	Limiter Cooling	Temperature	Radiation damage-sensors
		Water - Pressure	
		- Flow	
		- Temperature	
3. Fueling/Tritium Processing	Components	Inventory - Calculated	
		- Measured Mass Flow	
		- Residual Heat	
	Cleanup	Remote Handling	
	Leak Detection	Radiation	
	Liquids	Pressure	
		Temperature	
		Flow	
		Valves	
		Pumps	
	Gasses	Pressure	
		Temperature	
		Flow	
		Valves	
		Pumps	
	Fueling	Injector	Cryo control
		Quality	

Table 18-1. Process I&C Control Requirements (Continued)

Subsystem	Major Component	Measurement Type	Problems
4. First Wall/Blanket	Wall	Cooling Water - Pressure	
		- Flow	
		- Temperature	
		Integrated Flux - Measured	
		- Calculated	
		Temperature	Radiation damage-sensors
		Structural Loading	Radiation damage-sensors
	Blanket	Water Coolant - Pressure	
		- Temperature	
		- Flow	
		- Calorimetry	
		Breeding - Inventory	
		- Ratio	
		Temperature	Radiation damage-sensors
		Decay Heat	
		Leakage	
5. Vacuum	Pumps	Flow	
		Pressure	Calibration
		Coolant	
		Saturation (Cryo)	
		Regenerator Control	
	Valves	Position	
		Control	
	Impurities	Residual Gas Analysis	
		Leakage	
6. Shield	Shield	Radiation	Radiation damage-sensors
		Temperature	
		Leakage	
7. Radiation Waste/ Disposal	Radiation Monitoring	Area Monitoring	
		Influent Levels	
		Effluent Levels	
	Fluid Leak Detection	Mass Flows - Calculated	
		Chemical Detection - Areas	
		- Fluid Samples	

Table 18-1. Process I&C Control Requirements (Continued)

Subsystem	Major Component	Measurement Type	Problems
8. TF Coils	Coolant	Cryo - Level	
		- Pressure	
		- Flow	
		- Temperature	
	Coils	Temperature	
		Voltage	
		Current	
		Structural Loads	
	Power Supplies	Startup/Shutdown	
		Quench Detection	
9. OH Coils	Coolant	Pressure	
		Flow	
		Temperature	
	Coils	Temperature	
		Voltage	
		Current	
		Structural Loads	
	Power Supplies	Startup	
10. EF Coils	(Same as OH)		
11. Electrical	Breakers/Transformers	Open/Close	
		Voltages - Waveforms	
		Currents - Waveforms	
	Supplies	Trim Plasma Shape/Position	Measure/Compute Loop Speed
12. Support Structure		Stress	Electrical Noise
		Position	
		Temperature	
13. Cryogenic	Cryo Fluid	Pressure	
		Flow	
		Temperature	
		Calorimetry	
	Nitrogen	(Same)	
	Water	(Same)	

Table 18-1. Process I&C Control Requirements (Continued)

Subsystem	Major Component	Measurement Type	Problems
14. Heat Transport	Water	Pressure	
		Flow	
		Temperature	
	Steam Generator	Heat Balance	
		Leak Detection	
	Limiter	Calorimetry	Radiation damage-sensors
		Temperature	
	First Wall/Blanket	Temperature	
	Auxiliary	Calorimetry	
15. Instrumentation/ Control	System Status	Power - Primary	
		- Standby	
		Temperature	
		Hardware Availability	
	Sensor Status	Reasonability/ Redundancy Check	

factor of four is assumed, and these redundant signals must be continually monitored to assure their availability. These considerations together lead to the assumed number of signals.

18.3.2 Plasma Instrumentation

Plasma measurements required, along with possible techniques for each, are listed in Table 18-2.

Table 18-2. Plasma Instrumentation Requirements

Measurement	Technique	Problems
1. Average Electron Temperature - T_e	Radiometer	Plasma Access Radiation
2. Average Ion Temperature - T_i	Radiometer	Plasma Access Radiation
3. Average Density - N_e	Interferometer	Plasma Access
4. Plasma Current - I_p	Magnetic Loops	RF Noise
5. Plasma Position	Magnetic Loops Visible Light	RF Noise Plasma Access
6. Impurity Density	Thomson Scattering	
7. Electron Density Distribution - $N_e(r)$	Thomson Scattering	Plasma Access Radiation Damage
8. Electron Temperature Distribution - $T_e(e)$		

18.4 STARFIRE I&C CONCEPTUAL DESIGN

Rather than attempt to describe specific details, given the uncertainties of both exact requirements and existing technology, it is probably more practical to concentrate upon the broad outlines of the STARFIRE Instrumentation and Control System, particularly those which are likely to have a noticeable effect upon other portions of the plant design. The features of the I&C System are summarized in Fig. 18-1 and discussed in somewhat greater detail below.

18.4.1 System Performance Requirements

In order to accomodate performance compatible with both electromechanical components and plasma control requirements, a basic system update rate of once per millisecond has been established. Together with the number of signals, assumed at 50,000, this produces an overall system bandwidth of 50 million signals processed per second. Although this is well beyond the capabilities of any present-day process control system, it should be comfortably within the capabilities of the technology of 2020. However, both the assumed form of that technology, and some other considerations as well, dictate that this performance will not be achieved by some single monolithic block of hardware. Instead, the most likely form of I&C system will be a distributed network, as shown in Fig. 18-1.

18.4.2 Network Architecture

The I&C System is designed as a network, with functions decentralized and performed at an appropriate hierarchial level, but with centralized control of data and communications. This allows maximum advantage to be taken of the spectrum of digital processors assumed to be available, particularly the 21st century equivalent of today's microprocessors. Centralization of data and communications, on the other hand, permits effective central control and monitoring of the entire plant along with record keeping and human interfacing.

18.4.2.1 Local Controllers

Reference to Fig. 18-1 shows the lowest level of control at the STARFIRE subsystems. This allows for modular design of individual subsystems and major components, and reduces perturbations throughout the rest of the I&C System from changes in individual subsystems or components elsewhere in the system. Such differences may be accomodated mainly in instrumentation and computer program changes to individual controllers, and remain transparent to higher levels of the system. These local controllers would be located near the sensors and controls to which they are attached, distributed throughout the facility, and would number, as a rough approximation, about 100.

Individual subsystems may incorporate intelligence at an even lower level, as required for equipment interlocking control, or personnel safety. This local intelligence is assumed to be part of the design of individual components and subsystems, and is not shown as part of the I&C system. At this level, also, are incorporated any local controls needed for component or subsystem checkout and maintenance, and interlocks to protect against hazardous or erroneous commands from the central control.

It will probably be desirable to maintain some uniformity among these controllers in terms of their size and the number of signals they handle. If they are limited to about 500 signals, and handle an average of half of that, or 250, this means that there are about 200 of them throughout the facility. They would require a maximum bandwidth of 500 K transfers per second for communicating with their attached signals, a capability of performing about 1000 instructions on each of 500 signals every millisecond, or 500 million instructions per second. This would require an instruction time of 20 nanoseconds, which should be well within the technology of the time for microprocessors. Assuming that 1% on the average, of all signals at any given time generate message requirements for the supervisory level, that would result in a supervisory message rate from each local controller of an average of 2,500 per second. Assuming each message has a length of 1000 bits, a communication bandwidth of 2.5 MHz would be required.

18.4.2.2 Communication Concentrators

At the next level are communication concentration systems. They concentrate and multiplex the messages for several of the local controllers, and are grouped throughout the facility, wherever a cluster of local controllers exists. They serve two functions: to concentrate communications from the relatively low bandwidth of the channels from local controllers to higher bandwidth channels from the supervisory systems, and to distribute required information from one local controller to another as they require in order to perform their individual functions.

There will be some need for certain groups of local controllers to have significant processing or control capability. Examples of these may be some of the diagnostic instruments, or the plasma control function.

In the former case, a great deal of concentration is possible as well, were several hundred measurements may be reduced to a few points in a plasma temperature or density profile. These functions may be performed most efficiently by detached processors of considerable power. They should be capable, for example, of computing a Thomson Scattering profile of several points, which is presently possible with much precomputing in about ten seconds, within a millisecond, which will require careful design even assuming a thousand-fold improvement in minicomputing power.

The number of local controllers handled by one concentrator will vary considerably, depending on the way in which local controllers group geographically in the facility. If a maximum of 20 local controllers per concentrator is assumed, however, and a message length of 1000 bits per signal transaction is further postulated, then the frequency bandwidth required of the links to the next highest level is an average of 50 MHz. If the further assumption is made that each concentrator serves an average of ten local controllers, then there will be approximately 20 of these communication concentrators in the I&C System.

18.4.2.3 Communication Control

Messages to and from the communication concentrators, distributed remotely throughout the facility, will be concentrated and controlled in the vicinity of the control room by a communications control subsystem. Since it must handle the equivalent of 20 links, each operating at a 50 MHz rate, it will be a system considerably beyond the present-day technology, which operates such links routinely only in the 50-200 kHz bit range. However, invoking again the thousand-fold improvement in technology, this should be within the range of 2020 technology.[10]

18.4.2.4 Supervisory Systems

At the supervisory level, several subsystems with various functions exchange information with each other and with a centralized data base. By centralizing the functions of data base maintenance and network communication, it should prove possible to maintain data synchronization with all the various elements of the system. The network communication function will be

in a position to recognize information flowing through it which should result in a data base update, and should further be able to recognize other subsystems in the network which may require notification of these changes as well.

The assumed rate of processing results in the generation of 50,000 data base transactions per second. It is reasonable to assume some increase in traffic as well, because of the need to propogate these changes to other subsystems in the network. If an additional order of magnitude increase is assumed because of this, then the data base and network communication is handling about 500,000 transactions per second. This may be compared to comparable functions in present-day process control systems, which handle on the order of 1,000 transactions per second in a highly structured environment, or random transaction processing systems, whose capability is another order of magnitude down from this. Assuming again a thousand-fold improvement in computing technology, it appears that the required rate should be within the grasp of 2020 technology. It is reasonable to assume that each of the 50,000 signals in the I&C System requires about 1000 bytes of information in random access storage, and 10,000 bytes of information available in on-line archive storage, corresponding to the functions presently performed by computer main memory and disc in present-day technology. This suggests a random access main memory storage capability of about 50 million bytes, and an on-line archive of about 500 million bytes, somewhat larger than would be convenient presently, but presumably comfortably within practical range of 2020 technology.

The alarm monitoring subsystem receives reports of data base changes and uses them to monitor critical variables and combinations of variables within the plant, and call the attention of operating personnel to any undesirable conditions as they develop. Because of the overall processing rate of the system, it is also capable of producing sequence-of-event logs as well, with one millisecond time resolution. In order to perform this, it must be capable of sorting messages which arrive out of sequence, order them, and apply knowledge of plant systems to establish cause/effect relationships.

The displays/controls subsystem operates the human interfaces in the plant control room, responds to operator requests, and generates the information to provide both routine status monitoring and responses to specific detailed information requests.

The sequencing subsystem performs the operations necessary to automatically start up the plant, respond to output change commands, and shut the plant down. The logic necessary to respond to unusual or upset conditions would also be associated with this subsystem, except for that specifically distributed to safety-related subsystems. The remote access subsystem provides the capability for access to I&C System information from persons located remote from the plant control room. These may include other automatic systems, such as those performing generating and dispatch functions for the utility or grid, as well as management or accounting systems seeking management information. In addition, future regulatory agencies such as the NRC or state utility commissions may require some form of access to plant I&C Systems. The remote access subsystem would perform the necessary security functions, including access validation and encryption/decryption, as well as generating any required data summaries.

18.4.2.5 Plant Simulation

At the highest level of network hierarchy is a computer system capable of simulating operation of the entire power plant. It is desirable that this system be capable of generating projections at about 100 times real time, so that a projection of the consequences of a particular operating decision some two hours into the future would be available within about a minute of elapsed time. This is a formidable requirement, and well beyond even a thousand-fold improvement in existing hardware. What is expected is that improvement in theoretical understanding of plasma behavior will lead to far better mathematical models, and produce an additional three orders of magnitude improvement in computing speed. Even at this, it is not clear whether the plant simulation subsystem would be located in each plant of the STARFIRE design, or whether it can be shared by a number of similar plants and accessed remotely. The latter assumption has been made in this design,

for this would almost certainly represent the most advanced computing technology available in 2020, much as today's MFE network computers do for 1980.

18.4.3 Integrated Safety System

The subsystem designed to protect the safety of plant personnel and protect equipment from improper operation and protect the public from radiation or other hazards, has been integrated into the design of the I&C System. This is largely contrary to contemporary nuclear power practice, which has until now segregated safety functions in a rigidly separate subsystem. This has been done for two reasons: first, to apply more stringent design and material quality standards, and second, to prevent failures in nonsafety related equipment from propagating into the safety subsystem.

The experience in 1979 at Three Mile Island has led to a reexamination of this segregation philosophy. The TMI incident was initiated by failure of components not defined as safety related which nonetheless produced a situation where cooling was lost to the reactor core. This condition was not immediately recognized because of missing, conflicting, and extraneous indications presented to plant operators, a situation which appears at this time will lead to much greater integration of safety related equipment into the overall plant I&C system for future fission power plants.[11]

This integration will be assisted by modern electro-optical technology, which greatly simplifies the design of electronic interfaces which do not propagate electrical faults across them, and by falling prices for electronic hardware, which provides greater economic incentive for the design of redundant, fault-tolerant electronic and sensor configurations. As a result, it is anticipated in this design that by 2020 much, if not all, of the I&C System will incorporate design and component quality to allow for the performance of safety related functions.

18.4.4 Redundant Elements

Each of the blocks shown in Fig. 18-1 are made up of multiple redundant elements. This will be possible through the increasing complexity of integrated circuit elements, which will be utilized to incorporate fault-tolerant

redundancy as well as increased functions, and through improved hardware and software architecture to utilize these circuits.

It is expected that this redundancy will be extended all through the I&C System down to the sensor and actuator level, in order to improve the reliability of components within areas requiring remote maintenance and/or blanket module replacement for repair. This redundancy is also extended to the plasma instrumentation: lasers, microwave systems, magnetic pickups, etc. Plasma instrumentation in particular is intended to be redundant to the extent that each annual set of blanket module replacements will replace a complete set of plasma diagnostics, which means six-fold redundancy for such instrumentation.

18.4.5 Modular Instrumentation

In order to both enhance capability and reduce requirements for remote maintenance, as much instrumentation as possible is intended to be designed directly into the components being instrumented. This is particularly true of instrumentation associated with blanket, shield, magnets, and other reactor subsystems. This will allow for two advantages: installation, alignment (where required), calibration, and testing may be performed at the time of installation of reactor components; and repair or replacement may be performed during annual blanket module replacement.

Considerable effort must be taken in the design of blanket modules to include a complete set of plasma instrumentation in each set of annually replaced segments; in other words, six complete sets of plasma instrumentation modules. Plasma instrumentation, for example, which must look through chords of the plasma volume, must have their source, such as lasers, and their detectors, mounted into the blanket modules with sufficient precision so as to require no alignment once the modules are installed. Alternatively, the alignment systems must be designed into the blanket modules and capable of remote activation, for such things as mirror or lens alignment.

Such remote alignment systems need not be designed to survive the reactor operating environment, however. Once the new blanket modules have been installed, the alignment systems need survive only the residual radioactivity

and heat associated with the nonoperating environment. Some operation producing minimal radiation, such as with only a hydrogen plasma, may be desireable at startup and following each annual blanket replacement, to permit instrument alignment and calibration before the nonhardened alignment components become radiation damaged and inoperable.

18.4.6 Wireless Data Links

The environment of the reactor and the requirements of remote maintenance are both inhospitable to cable transmission of data. A far more fruitful concept is the use of wireless links from modules mounted on the reactor or other subsystems to communication concentrators, and the transmission from these concentrators, by means of wide bandwidth, nonconducting data links. These may be either microwave or light. In addition to ease of communication, they will also provide fault isolation and electrical insulation from the various subsystems.

Use of these links should also greatly reduce the number and size of wiring penetrations required through the reactor hall walls. This may be accomplished by mounting the concentrators at the walls, with their wide bandwidth links penetrating the containment.

18.4.7 Remote Maintenance

Remote maintenance functions are intended to be performed by subsystems connected to the I&C system and controlled either centrally from the plant control room, or at remote locations convenient to the locations where the maintenance is being performed, such as a hot cell. It includes specialized control console positions, with television and sound connections to various plant areas as well as through the remote handling equipment.

All of the plant subsystems which require remote maintenance must be designed to incorporate necessary service features, such as conveniently mounted and aligned equipment, disconnects for water, electricity, instrumentation, and other facilities, and any necessary provisions for sensors to assist with this task.

18.5 PROBLEM AREAS

Natural developments in a number of technological areas are expected to provide solutions to what would otherwise be troublesome areas in the STARFIRE I&C System design. These include the demands of speed, quantity, and diversity of the information handled and processed by the system, and the needs for reliability and modularity, which are expected to be provided by natural evolution in the electronics, computer, and communications technologies. A relatively few problems remain, but their solution may be expected to be crucial to the ability to produce a STARFIRE, or indeed for the evolutionary projects leading to it.

18.5.1 Radiation Environment

The STARFIRE I&C system design stresses the removal of as many components as possible behind the shield, and use of wireless communications to carry information from the reactor to communication concentrators located at the inside walls of the reactor hall. This has been done to enhance maintainability, but will also help in reducing the use of conductors, with the problem of radiation damage to insulation, or fiber optic cables, with radiation darkening of the optical fibers. The communication concentrator subsystems located inside the radiation hall are amenable to shielding, and can be integral with their wall penetrations, so that their wide bandwidth links to the control room can be entirely outside of the radiation environment.

However, considerable electronics must be mounted just outside the shield, in approximately the same radiation environment as the superconducting magnet subsystems. It may be possible to use some of the coil and mounting structures to provide some shielding, but the problem of communicating with sensors in the blanket modules, wall, and limiters remains. For these, sensors and wiring must be developed capable of withstanding the STARFIRE radiation environment.

The plasma instrumentation is also of concern. Properly designed microwave plumbing should be compatible with the radiation environment, but lasers and detectors imply either lasers and detectors capable of withstanding the

radiation, or lens and mirrors or other optical components which can lead light to and from the plasma. These all suffer from problems with darkening or sputtering.

One mitigating factor may be observed, and that is the modularity required for maintainability. Virtually all of the components which must survive the radiation environment must "ride" with the individual blanket sectors, and so need be capable of surviving only for six years instead of the entire life of STARFIRE.

18.5.2 Plasma Access

In the design of operating tokamak reactors, this problem of access to the plasma is compounded by the radiation environment and need for remote maintenance. Modularity of instrumentation with individual blanket sectors must be enforced to allow for maintainability, which complicates access for devices which need to look directly into the plasma. For those desiring vertical access, clearance is limited on the top and bottom of the blanket sectors. This means that for optical devices, the optics must be folded outward at top and bottom by 90 degrees, but that an entire set of instrumentation, both radiation source and detector, may be mounted on the same blanket sector.

For devices requiring access in a tangential direction to the plasma, not only must the optical path be folded, but alignment must be maintained between blanket sectors separated by several other sectors. This in turn implies either precise alignment of each sector with respect to all others, or remote alignment systems.

For either vertical or tangential systems, the folding of optical path requires the use of mirrors, lenses, or both. Materials able to do this and survive the radiation and plasma wall environment are presently lacking. The choice is to either give up all optical instrumentation, relying solely upon microwave and magnetic information, or to develop the needed optical components.

18.5.3 Plasma Instrumentation

The development of "fully engineered" plasma instrumentation will be required for reliable fusion reactors. At the present, plasma measurements are commonly referred to as "Diagnostic Experiments," and contain a large amount of custom-developed, state-of-the-art design, components, and data acquisition equipment. A deliberate program for the development of standard plasma measurement systems is required.

References

1. R. Bernhard, "Solid State Looks to VLSI," IEEE Spectrum, Vol. 17 #1, p. 44 (1980).

2. R. Sugarman, "Superpower Computers," IEEE Spectrum, Vol. 17 #4, p. 28 (1980).

3. B. M. Olives, "The Role of Microelectronics in Instrumentation and Control," Scientific American, Vol. 237 #3, p. 180 (1977).

4. I. E. Sutherland and C. A. Mead, "Microelectronics and Computer Science," Scientific American, Vol. 237 #3, p. 210 (1977).

5. W. Anacker, "Computing at 4 Degrees Kelvin," IEEE Spectrum, Vol. 16 #5, p. 26 (1979).

6. R. Bernhard, "Computers: Emphasis on Software," IEEE Spectrum, Vol. 17 #1, p. 32 (1980).

7. J. Gurd and I. Watson, "Data Driven System for High Speed Parallel Computing," Computer Design, Vol. 19 #6 (1980).

8. J. R. Welch, "Automatic Speech Recognition," Computer, Vol. 13 #5, p. 65 (1980).

9. G. J. Agin, "Computer Vision Systems for Industrial Inspection and Assembly," Computer, Vol. 13 #5, p. 11 (1980).

10. D. Bursley, "Intel to extend Family to 32 Bits," Electronic Design, Vol. 28 #13, p. 41-42 (1980).

11. W. L. Livingston, "The Impact of Three Mile Island on Process Control Computer Technology," Control Engineering, Vol. 27 #5, p. 86-91 (1980).

Table of Contents

		Page
19.1	SUMMARY	19-1
19.2	PLANT OPERATION	19-3
19.2.1	Plant Startup	19-3
19.2.2	Normal Operation	19-8
19.2.3	Plant Shutdown	19-9
19.2.4	Load Follow	19-11
19.2.5	Full Load Rejection	19-12
19.2.6	Reduced Power Operation	19-12
19.3	MAINTENANCE	19-14
19.3.1	Approach and Philosophy	19-15
19.3.2	Reactor and Subsystem Design Features	19-20
19.3.3	Maintenance Facilities	19-32
19.3.4	Maintenance Equipment	19-44
19.3.5	Availability Assessment	19-64
19.3.6	Unscheduled Maintenance	19-95
19.3.7	Recommendations	19-108
19.4	PERSONNEL REQUIREMENTS	19-112

List of Figures

Number		Page
19-1	Plant startup sequence	19-4
19-2	Standard automated latch system concept	19-21
19-3	STARFIRE exploded view	19-22
19-4	Vacuum pump and isolation valve configuration	19-27
19-5	Seal design	19-30
19-6	Reactor building and maintenance facility	19-35
19-7	Typical support system module - primary coolant	19-38
19-8	Crane maintenance bay	19-40
19-9	Monorail switching system	19-41
19-10	Anti-torque panel handling machine	19-48
19-11	Shield door removal	19-49
19-12	Shield door removal mechanism	19-50
19-13	Blanket sector handling machine	19-52
19-14	Universal remote maintenance vehicle	19-55
19-15	URMV remote operations	19-55
19-16	Mobile manipulator system	19-56

List of Tables

Number		Page
19-1	Initial Conditions for Startup	19-5
19-2	Estimated Startup Times	19-5
19-3	Design Basis Reactor Shutdowns	19-10
19-4	Downtime Allocations	19-16
19-5	Expected Maintenance Needs	19-19
19-6	Summary of Reactor Component Weights	19-24
19-7	Coolant Line Bundle Grouping	19-25
19-8	Nuclear Facilities Employing Total Remote Operations	19-34
19-9	Summary of First Wall/Blanket Sector Replacement Time	19-66
19-10	First Wall/Blanket Sector Replacement Sequence And Time Estimates	19-67
19-11	Vacuum Pump and Valve Replacement	19-73
19-12	STARFIRE Reactor System Breakdown for Maintenance Analysis	19-75
19-13	STARFIRE Scheduled Maintenance Downtime Estimates	19-83
19-14	Footnotes to Tables 19-12 and 19-13	19-91
19-15	Maintenance Equipment	19-94
19-16	STARFIRE Unscheduled Maintenance Downtime Estimates	19-97
19-17	Summary of Unscheduled Maintenance Downtimes for Critical Maintenance Items	19-108
19-18	STARFIRE Power Plant Personnel	19-113

This chapter describes the operation and maintenance of the STARFIRE reactor and its major systems. Included are: (1) the planned operational cycle including startup, normal operation, shutdown, load follow, full load rejection and reduced power operation after component failures; (2) the rationale for selection of the maintenance approach, including design of the reactor, reactor building, hot cell and maintenance equipment; and (3) evaluation of times required to perform maintenance operations with resulting subsystem reliability requirements for achieving a 75% plant availability.

The STARFIRE reactor operation and maintenance approaches are presented to provide an initial basis for assessing the requirements of a commercial tokamak. Further iterations are required to clarify the approach in some areas and to provide complete consistency. The information presented should provide significant insight regarding the issues that require development in more near term reactors such as the ETF and the DEMO.

19.1 SUMMARY

The reactor has been designed to be as compatible as possible with current utility operation and maintenance practice. Power is drawn from the grid for reactor startup. The blanket and heat transport systems are brought up to hot operating conditions prior to plasma initiation and the reactor power is brought up slowly to minimize the thermal stress effects on the blanket and steam generators. Once operating, the reactor has the ability to load-follow at a rate of 5% of rated power increase or decrease per minute, although the reactor is designed as a base load unit. The plant will normally operate continuously with one scheduled shutdown per year for maintenance and it is anticipated that one to three other shutdowns per year will occur as a result of component failures. Once the reactor is shut down, it can be restarted to full power in approximately 30 min.; however, approximately 12 hours will be required for a restart if the TF coils are discharged for maintenance or if the vacuum chamber has been briefly breached. After major vacuum chamber breaches, 36 hours is required for restart.

The STARFIRE reactor and maintenance facility designs have been developed to provide sufficient definition of overall reactor maintenance operation to

permit a cost and availability assessment to be made. The design is based on the assumption that a mature fusion economy exists and that all facets of the design have been demonstrated in previous power plants. The premise that a fully understood technical basis exists for STARFIRE leads to the assumption that periodic component replacement can prevent unscheduled failures from dominating the maintenance needs. The plant availability goal is 75% and the system reliability requirements have been established accordingly based on the projected time for replacement of system components.

For the STARFIRE design of the reactor, systems and facility, it is projected that scheduled maintenance activities can best be accomplished using a preprogrammed automatic remote maintenance system. The major benefit is that this approach minimizes radiation exposure to maintenance workers. A total remote maintenance facility has been designed for all equipment located within the reactor building and hot cell.

The reactor facility was developed to assure that radioactive products are confined to the reactor building and hot cell where total remote maintenance is provided. Solid and liquid waste processing and waste storage systems are provided in the hot cell. These systems provide for segregation of materials, compacting and packaging for storage and subsequent shipping to recycle centers. A reactor service building is provided for repair of decontaminated parts and for pretesting of new parts before transport into the hot cell.

The reactor building layout has been developed so that only those subsystems which are potentially contaminated with significant radioactive contamination are located within the reactor building. Most noteably this includes the steam generators and other primary heat transport components and the atmospheric tritium cleanup system. A modular approach is used for all subsystems and emphasis is placed on removal and replacement maintenance operations instead of insitu repair. A monorail track is provided throughout the hot cell and reactor building to provide for transportation of subsystem components and to provide accurate maintenance equipment positioning. Contact maintenance is then possible on all nonactivated subsystems located in other buildings.

19.2 PLANT OPERATION

Plant operations required for startup, normal, shutdown and reduced power operation with some failed components are discussed in this section.

19.2.1 Plant Startup

After plant construction, an extensive series of tests will be performed to assure that the reactor and all systems are operating properly. During subsequent reactor operation all systems will be monitored continuously to detect and locate failures and to identify any necessary corrective action. After a component failure causes reactor shutdown, subsequent repair will require that several tests be performed to reverify the system. These failure specific tests and actions are assumed to have been completed prior to the startup/ shutdown scenario discussed here. A basic assumption is that the superconducting magnets are kept in the cold state at all times unless a specific maintenance action requires a magnet warm up. Approximately thirty days is required for magnet cooldown.

The operations required for reactor startup after a scheduled maintenance period are presented sequentially below. A summary of these operations is presented in Fig. 19-1. Some of the information presented is taken directly from Ref. 1.

Reactor startup time is dominated by magnet charging, primary coolant system warm up and vacuum system pumpdown. The limiting operation depends on whether the reactor is started up after a major or minor maintenance operation or after reactor shutdown for minor system or BOP repair. The three startup scenarios are: (1) cold, (2) hot, and (3) rapid.

A cold startup occurs after the reactor has been shutdown for a lengthy maintenance. The primary coolant system has been cooled down and the TF, EF and OH coils discharged. The vacuum boundary is also assumed to have been breached to permit blanket sector replacement. A 36 hour bakeout period is planned after a blanket sector has been replaced to clean the chamber. The primary coolant is brought up to temperature using the heat incurred by operating the coolant pumps. The ECRH system is turned on while the vacuum pumps operate to outgas the chamber.

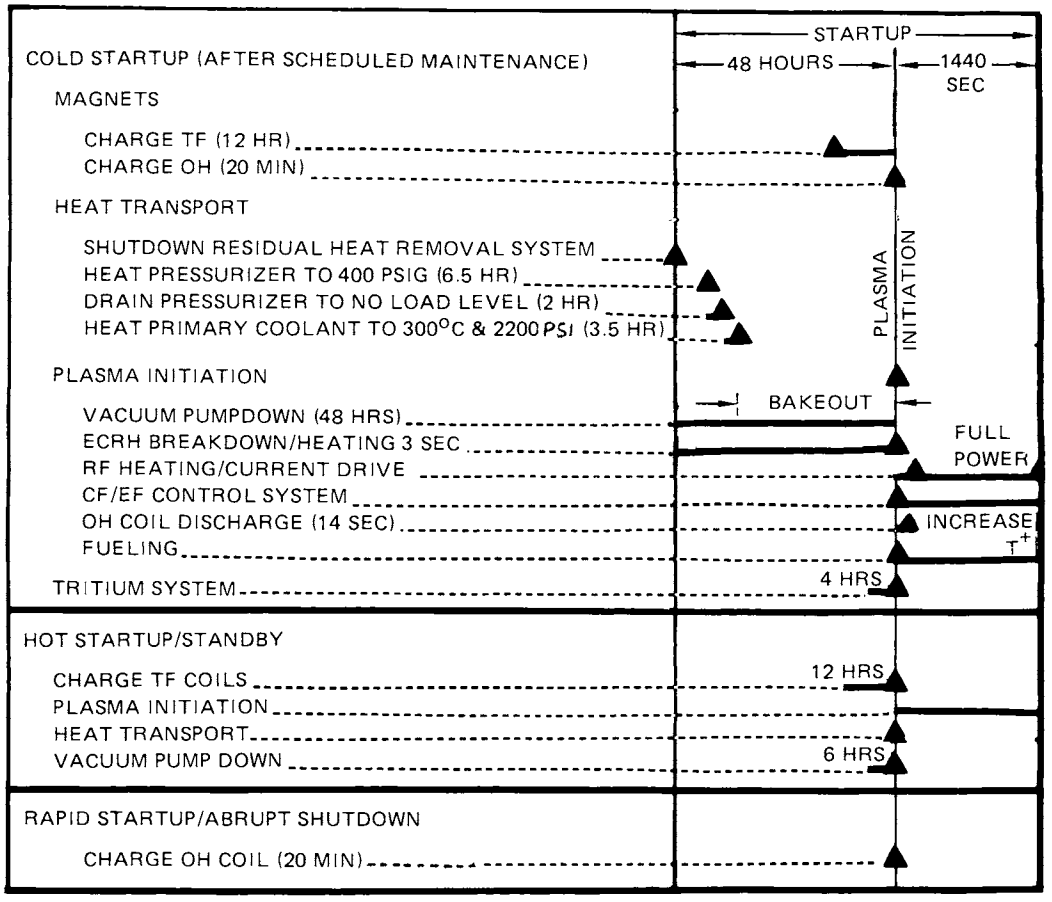

Figure 19-1. Plant startup sequence.

A hot startup occurs after the reactor has been shut down for a short duration and the TF magnets discharged. The vacuum boundary may have been breached for a few hours. The dominating constraint in reactor startup is expected to be TF coil charging.

A rapid startup occurs when all reactor systems have been left intact, such as in the case of a turbine trip. The OH coil system must be recharged and the plasma initiated.

The sequence of events required to warm the primary coolant system, charge the magnets and pump down the plasma chamber will be discussed separately; however, depending on the machine status, all these steps may be required for a reactor startup. The magnet charging operation simply involves drawing power from the grid for 12 h. Auxiliary plant systems startup is similar to the PWR procedure of reference 1.

19.2.1.1 Primary Loop

Startup, as described here, applies to routine plant operational startup, and can be from either the hot or cold condition. Startup from a cold condition is initiated following a shutdown that requires the reactor coolant system to be cooled down and depressurized, such as during scheduled maintenance. Startup from a hot condition refers to return to power operation following a shutdown not requiring depressurization, such as restart following a turbine trip. Values of major parameters for hot and cold startup are presented in Table 19-1.

Table 19-1. Inital Conditions for Startup

Parameter	Cold	Hot (No Load)
Reactor coolant temperature, °C	≤60	300
Reactor coolant pressure, MPa (psi)	2.7 (400)	15.2 (2200)
Pressurizer level, % full	100	25
Pressurizer temperature, °C	60	320

Estimates of times required for typical startups from both of these above initial conditions are presented in Table 19-2.

Table 19-2. Estimated Startup Times

	Operation	Hot, Hours	Cold, Hours
1.	Raise primary system pressure to 2.7 MPa (400 psig) and raise pressurizer temperature to saturation at 2.7 MPa.	-	6.5
2.	Drain pressurizer to no-load operating level, maintaining system pressure at 2.7 MPa.	-	2.0
3.	Raise reactor coolant system to no-load conditions (T_{avg} = 295°C (560°F), system pressure 15.2 MPa (2200 psia))	0.5	4.0
4.	Raise the plasma output to full power (5 percent per minute)	0.5	0.5
	Total	1.0	13.0

In developing Table 19-2, it is anticipated that the turbine is in rolling standby before the reactor coolant system reaches the no-load condition.

Cold startup is described first because the steps involved in the advanced stages of both types of startup are similar. In performing a cold startup, the initial step is to check out the electrical and fluid systems. Checks are made to assure that electrical power is available to all components and systems required to operate during startup and normal plant operation, that all instrumentation and control systems are functioning properly, and that the fluid systems are valved in as required. The reactor coolant system and pressurizer are completely filled with water and the system pressure is maintained at 2.7 MPa. The auxiliary cooling water systems are in service, supplying cooling water to support systems and components.

The pressurizer heaters are energized to start the heatup of the pressurizer necessary to form the steam bubble. The residual heat removal equipment, if in service, is shutdown. The pressurizer heaters may be energized before the establishment of all prerequisite conditions for startup to minimize overall startup time. With the water chemistry within allowable limits, the reactor coolant pumps are started sequentially and pump heat is used to raise the reactor coolant system temperature.

Pressurizer liquid temperature is raised to a level where the pressure is adequate for reactor coolant pump net positive suction head and seal requirements. The charging pump flow and low pressure letdown valve are controlled to obtain the desired pressurizer water level. Excess water inventory removed from the primary system is stored in the volume control tank.

When the reactor coolant temperature reaches about 100°C (210-220°F), the steam line vents are closed and the secondary side of each steam generator is drained to the normal operating range.

When the pressurizer temperature reaches saturation, flow in the primary loop cleanup line is increased to compensate for the steam bubble formation. The primary loop makeup pump speed is reduced to the minimum allowable value

necessary for reactor coolant pump seal injection water. The reactor coolant system pressure is maintained at 2.7 MPa (400 psig) by adjustment of the pressurizer heaters and/or pressurizer spray.

The secondary loop is warmed up in parallel with the primary loop. Conventional condensate and feedwater systems startup procedures are followed to develop a vacuum in the main condensers, and roll the turbines.

The heatup and pressurization continues until a zero load coolant temperature of approximately 288°C (550°F) and a pressure of 15.2 MPa (2200 psig) are reached. At this point, the plant is in the hot condition for which the following operations apply.

The turbine generator is brought up to synchronization speed and paralleled to the main grid. After determining that all systems are functioning properly, fusion plasma initiation begins. Power is increased at a rate not to exceed 5% of full power per minute by varying the relative amount of tritium in the plasma from 4% to 50%. At about 15% of full power the plant auxiliaries are transferred to the main generator output and the power level increased to full power.

19.2.1.2 Vacuum Pumpdown

Evacuation of the plasma chamber starts with operating the roughing pump system until the pressure has dropped to 10^{-3} torr ($\sim$ 1 h). At this point the cryopumps are cooled ($\sim$2 h) and the chamber pumpdown begins.

Heat from the primary cooling loop provides baking of the chamber during the pump down cycle. Approximately 8.5 h is required to achieve 230°C first wall temperatures and an additional 3.5 h is required to reach 300°C. The blanket temperature is then held at 300°C for 36 h while pump down and cleaning progresses until a 10^{-8} torr pressure is achieved. The Electron Cyclotron Resonant Heating (ECRH) system is also operated continously for 48 h for discharge cleaning.

19.2.1.3 Plasma Initiation

Plasma initiation is discussed in Chap. 6.0 in detail. Initiation begins with vacuum pumpdown and with OH coil charging which requires $\sim$30 min.

Next, the fuel is injected into the chamber by gas puffing and the ECRH system ionizes the fuel. ECRH breakdown requires 0.01 s. Simultaneously, OH coil discharge and rf system heating are started. The OH coils discharge requires 13.5 s. Two hundred sixty seconds are required before fusion begins. At 420 s and 500 MW of fusion power, a stable plasma has been attained. From this point, the plasma can be ramped to full power at varying rates. A rate of 5% of full power per min is used to limit thermal stresses in the steam generator. Full power is attained 1020 s later.

19.2.2 Normal Operation

Normal operation of the heat transport system and reactor are discussed below.

19.2.2.1 Primary Loop

Normal operation involves power generation at normal operating temperature and pressure. During all phases of normal operation, operating pressure is maintained by the pressure control equipment, and pressurizer water level is controlled by the primary coolant makeup flow control.

When the reactor is generating heat, system temperature is controlled by the reactor control and protection system. When the reactor power is below a predetermined percentage of full power the reactor may be controlled manually. Above this level, the reactor control and protection system automatically maintains the required coolant temperature.

19.2.2.2 Reactor

During normal plant operation, the reactor operates with all systems at steady-state. D-T fuel is constantly injected into the plasma and impurities are removed through the vacuum system. The compound cryogenic vacuum pumps absorb the impurities. Every two hours a set of 24 parallel units is switched in while the impurities that have been pumped by the first set of units are discharged to the tritium facility for processing.

The EF and TF coil magnets maintain a constant field and the CF coils are continuously pulsed to control plasma position. The OH coils are completely discharged.

The blanket and limiter are continuously cooled by the primary coolant loop and the feed water heating loop, respectively. Waste heat is extracted from the shield, rf system and other reactor subsystems.

The reactor building atmosphere is continuously recycled to remove any traces of tritium and the building pressure is maintained at slightly less than atmospheric to prevent outleakage.

Reactor and subsystem operation is continuously monitored by the control room and the reactor power output throttled as necessary to match load demands. When a component malfunction is noted, a redundant unit, as available, is automatically switched into full operation to prevent shutdown. Some failed components, located in the process module area of the reactor building, can be repaired during reactor operation. Others, however require complete reactor shutdown or operation at reduced power.

19.2.3 Shutdown

Three different types of reactor shutdown are anticipated. These are normal, rapid and abrupt as described in Table 19-3. A further discussion of shutdowns is given in Chap. 6. A scheduled shutdown (normal) will utilize the reverse process and timing of plasma startup. This mode will be utilized when possible to minimize thermal stresses and reduce the possibility of plasma disruption. In the event of an impending failure (i.e., small leak, etc.) where continued operation of 1450 s required for normal shutdown could have a deterimental effect on the reactor, the plasma is shut down in about three seconds (rapid). Abrupt shutdown results from an intentional or uncontrolled plasma disruption. In any of the above shutdowns the primary coolant is shutdown in the same manner. Approximately 3.5 h are required to stabilize the primary coolant loop in the hot standby mode and an additional 8.5 h are required for a cold shutdown. A description of the primary coolant shutdown follows.

Table 19-3. Design Basis Reactor Shutdowns

MODE	DURATION	NUMBER ANTICIPATED PER YEAR	TYPICAL USE
Normal	1450 s	1	Scheduled Maintenance
Rapid	∿3 s Linear	∿1	Impending Failure
Abrupt	100 ms	∿1	Plasma Disruption

19.2.3.1 Primary Loop

This subsection describes the plant operations necessary to take the plant from power operation to either of the cold or hot shutdown conditions previously described.

Assuming the plant is operating at a power level in excess of 15 % of full power, the initial shutdown step is to unload the turbine generator. In doing so, control systems are monitored to assure that the plant average temperature is reduced automatically in accordance with the programmed changes, and the steam generator levels are automatically maintained in the proper range.

At approximately 15 % of reactor power level, station auxiliary electrical loads are transferred from the turbine generator output back to the grid. The turbine generator is then completely unloaded, disconnected, taken to hot standby and removed from service in accordance with the turbine generator instructions.

If the plant is to be kept in a hot standby condition, the power level is reduced and the primary and secondary systems are placed in a hot standby condition. Steam dump to the condenser is used as required initially to remove residual heat. Reactor coolant pumps are taken out of service as required to maintain the desired loop temperature.

When the plant is to be taken to the cold shutdown condition, steam dump is utilized to start cooldown. All pressurizer heaters are turned off and the spray valves cool the pressurizer to maintain the system pressure within the applicable pressure-temperature limits. Makeup water is added to compensate for the reactor coolant contraction in maintaining the no-load pressurizer level.

As steam generator steam pressure decreases during the cooldown, the steam dump may be re-adjusted to maintain the desired cooldown rate. When reactor coolant system temperature and pressure are less than 175°C (350°F) and approximately 2.7 MPa (400 psi), respectively, the residual heat removal system is placed in operation to maintain the desired cooldown rate.

As the steam generator steam pressure approaches zero psig, the steam dump valves are closed. When the reactor coolant reaches 93°C (200°F), the secondary side of the steam generators is filled with water and chemicals are added as required for wet layup.

When the reactor coolant shutdown temperature is reached, operating equipment of the residual heat removal and secondary cooling water systems is reduced to the minimum required to maintain temperature.

When the minimum pressure for reactor coolant pump operation is reached, primary loop makeup is increased and the pressurizer level is raised to keep system pressure above the minimum required. Spray is continued throughout the operation until the steam bubble no longer exists in the pressurizer.

Makeup is then reduced to maintain a constant pressure, and all reactor coolant pumps are stopped. Pump seal water and makeup are discontinued, and the system is completely depressurized. The time required for plant cooldown is approximately 20 hours (based on 100°F maximum cooling water to the residual heat exchangers).

19.2.3.2 Reactor

Reactor shutdown will involve a controlled shutdown of the plasma as discussed in Chap.6.0. In addition reactor systems will be either held in a ready mode or shutdown further for repair. For reactor repairs, the TF coils will be discharged. Repair of the blanket will require the blanket temperature to be reduced and all tritium systems to be stabilized.

19.2.4 Load Follow

Load changes are initially made on the turbine generator. The reactor control system then adjusts reactor power level by appropriately changing the tritium concentration of the plasma to follow the power demand of the turbine.

19.2.5 Full Load Rejection

The heat transport system can be provided with the capability to sustain sudden large load decreases up to and including full load loss down to plant auxiliary loads, concurrent with the loss of external power. This is accomplished by controlled dumping of turbine throttle steam either directly to the main condenser, or to the main condenser and atmosphere.

This steam dump serves as a short-term artificial load which allows the reactor to automatically cut back power without tripping. Normally, the reactor control system itself cannot react rapidly enough to follow a sudden complete loss of load without allowing certain reactor plant variables, (e.g., pressure and temperature) to exceed allowable operating limits. Therefore, unless a sufficiently large controlled steam dump capable of simulating an external load on the reactor is used, the reactor will trip and shut down the plant. The incorporation of an adequately sized controlled steam dump permits rapid automatic reduction of power without reactor trip and enables the plant to continue operation and carry its own auxiliaries.

Steam dump is controlled by sensing reactor coolant average temperature, and is reduced as rapidly as the reactor control system can reduce plasma power. With this system, therefore, the total quantity of steam dumped is minimized.

The capacity of the steam dump initially required is equal to the total full load steam flow, less the percent load change for which the reactor control system is designed, less the steam required by the turbine to carry auxiliary loads. This results in a maximum steam bypass flow requirement of approximately 85 to 90% of rated steam generator flow. The integrated flow is equivalent to approximately 8 to 10 min at full power.

19.2.6 Reduced Power Operation

Two important aspects in attaining a high availability in STARFIRE are the use of full redundancy in some subsystems with partial redundancy in others, and the ability of STARFIRE to be operated at varying power levels. In the event of a component failure, either the redundant unit permits continued operation, power is reduced to permit operation at a reduced power level, or the reactor is shut down for repair.

Major subsystems that include redundancy to permit continued operation are discussed below.

19.2.6.1 Vacuum System

The roughing pump system is fully redundant and can be maintained during reactor operation. The 48 compound cryogenic pumps can not be fully redundant because of space limitations, however, some redundancy is inherent in design by oversizing of the pumps. Twenty-four of these pumps are operated for two hours while the other 24 are being regenerated.

The reactor can operate at full power with two pump failures. A third and fourth pump failure can be tolerated without power reduction if the failed pumps are in or switched into the opposite set of 24 pumps. Five pump failures would result in operation at reduced power until a scheduled maintenance period. Similarly the isolation valves to the vacuum chamber can also be operated with up to four failures because they are in series with the vacuum pumps. In addition, further failures can be tolerated because two valves are located in series. A gate valve and a right angle valve are provided. The gate valve has a life of 2000 cycles while the right angle valve has an 8000 cycle life (2 years of operation at 2 h/cycle). The gate valve lasts for the plant design life since it is only used after failure of or during maintenance of the right angle valve. Maintenance of the right angle valve is expected to require seal replacement. This is accomplished by removing and replacing the actuator, valve stem and seal as an assembly. The seal is then replaced in the hot cell and the refurbished assembly reused in a later maintenance changeout.

Replacement of the vacuum pumps or the right angle isolation valve during reactor operation would require design of a remote mainpulator that can maneuver in the magnetic field environment. Further evaluation of this manipulator requirement should be undertaken and should include: (1) induced forces, (2) induced current arcing, (3) need for non-electrical controls, and (4) neutron streaming during valve or pump removal.

All vacuum chamber seals are redundant. In event of failure of a single seal, monitoring of the pressure change between seals identifies the failed seal for later maintenance and the second seal permits continued operation at full power.

19.2.6.2 RF System

Twelve rf ducts are provided in the system; each duct has 4 identical grill sets. In event of failure of an amplifier or some other part of the system 1/48th of the system can be shut down and the plasma power adjusted accordingly. A coolant leak from an rf grill into the plasma chamber would result in reactor shutdown.

19.2.6.3 Tritium Facility

The tritium facility is fully redundant and located in a separate building away from the reactor building. The system can be repaired while the reactor continues to operate at full power.

19.2.6.4 Tritium Cleanup

The tritium cleanup system consists of a number of individual units, 24 in the reactor building and five in the hot cell. Normally only three units operate in the reactor building and one unit is operating in the hot cell. This permits continued reactor operation while repairing a failed unit. Under tritium accident conditions all units would be operated. Failure of a single unit would increase cleanup time.

19.2.6.5 Heat Transport System

Two steam generators are used in each of the dual loops. A single steam generator failure requires isolating the failed unit and adjusting the other loop for operation at 50% power while repairs are made.

Two primary coolant pumps, each rated at 50% of full loop flowrate, are used in each loop, so that a single primary coolant pump failure requires the reactor to be operated at 50% power while repairs are made. The auxiliary coolant loop includes two 100% pumps, but no backup heat exchangers.

19.3 MAINTENANCE

The reactor and maintenance facility designs selected for STARFIRE are presented in this section. A total remote facility has been developed to minimize radiation exposure to workers. All known or foreseen maintenance

operations are planned for remote operation; however, flexibility has been provided by design of the reactor shielding to permit access by properly shielded and suited personnel within 24 h after reactor shutdown.

19.3.1 Approach and Philosophy

The STARFIRE reactor and maintenance facility design has been developed to enhance plant availability. Because of lack of substantiating data for actual subsystem reliability, emphasis was placed on designing the reactor to permit rapid replacement of those components which are expected to require frequent reactor shutdown for scheduled maintenance and replacement. We have chosen to define all major features of the design, develop a maintenance scenario, define equipment, estimate the times for maintenance operations, and allocate subsystem reliability goals so that a 75% plant availability can be achieved. These goals will provide guidance for subsequent subsystem development efforts that will necessarily include a reliability assessment of each subsystem and inclusion of appropriate redundancies. Following the assessment, a re-evaluation of the goals will be required.

A 75% availability goal is considered reasonable based on past experience with nuclear fission power plants. The average nuclear industry plant availability factors were 68.6%, 72.2% and 73.5% for 1974, 1975 and 1976 respectively[2,3]. Average availability of commercial nuclear plants in 1979 was 69%. Individual power plants have attained plant availabilities as high as 85% (Commonwealth Edison) and a commonly used goal for PWR calculations is 80%[4].

The complexities of a fusion system will reduce the achievable availability as compared with LWR/PWR'S if the same technology is assumed. However, advances in automated maintenance technology and simultaneous development of the maintenance system and reactor designs should make a 75% availability goal achievable. The maintenance system must receive as much attention from the outset of the design as any other major system in order to achieve this goal.

The STARFIRE reactor design was developed based on the assumption that it was the tenth unit constructed from a standarized design. This led to the

assumption of a highly predictable machine that has resulted from an extensive R&D program and operating experience from earlier plants. This background was assumed to have provided information on subsystem reliability and maintenance needs and to have resulted in the use of redundant components where cost effective. The net result of the assumption that the frequency with which maintenance is performed and the types of repairs needed are understood, is that the maintenance system can be automated for remote operation.

The reactor maintenance schedule was developed to fit within the balance-of-plant maintenance scenario recommended by the Utility Advisory Group (see Appendix A). It includes an annual shutdown for four weeks (28 days) to perform maintenance and inspection, and a four-month (120 days) shutdown every ten years for overhaul of the turbine-generator. During this period the TF coil system is also annealed. Thus an average annual scheduled outage of 37 days is predicted.

In addition, current experience indicates that approximately 20 days downtime per year is caused by failures in the balance-of-plant (BOP). As a result of these constraints, the following downtime allocations were made as listed in Table 19-4.

Table 19-4. Downtime Allocations

Balance-of-Plant		Reactor	
Scheduled	Unscheduled	Scheduled	Unscheduled
37 days	20 days	37 days	34 days

The 37 days of reactor scheduled maintenance assumes that the reactor will be maintained simultaneously with the BOP on a noninterference basis. The total of 57 days outage required for BOP maintenance leaves 34 days for reactor unscheduled maintenance if the 75% availability (91 days outage/year) is to be achieved.

Maximum availability is achieved by developing the reactor design to be capable of maintenance on a noninterference basis with the balance-of-plant. We have chosen to replace a fraction of the blanket sectors on an annual basis for the reference design. However, in light of the predicted 10 day replacement time for two sectors, it may also be desirable to replace 8 sectors every other year on a noninterference basis. This option is a utility choice which will depend on the desire for levelized annual costs, flow of equipment around the reactor and the utility's decision on how to use blankets removed prior to their end-of-life. No assessment was made of this option, however, the choice would likely be clear by the tenth plant.

The design was developed to permit fully remote maintenance equipment to perform all operations inside the reactor building and hot cell. However the reactor shielding has been designed to permit personnel access to the reactor building within 24 hours after shutdown. The carbon dioxide environment, possible tritium contamination of the building and activated particulate matter would require personnel to wear special clothing and breathing apparatus. The more effective shielding provided to permit personnel access within 24 hours after shutdown also reduces the activation level of the reactor and building components and permits recycling of a larger portion of the spent materials.

The major reasons for selecting the fully remote maintenance approach are; (1) the total radiation exposure to maintenance workers can be reduced significantly through use of fully automated equipment, (2) with proper design a reactor can be maintained more rapidly by automated equipment than by radiation protected personnel, (3) some remote capability is required for accident conditions, (4) shielding requirements are minimized for subsystem modules, (5) decommissioning is simplified, (6) some repair during reactor operation is possible and, (7) machines require minimal shield protection.

Remote maintenance equipment permits maintenance operations to start immediately after reactor shutdown or in many instances during reactor operation. Maintenance on the reactor itself, however, is likely to be constrained by the effects of the magnetic field on maintenance equipment controls and motions in areas close to the reactor. This phenomenon needs further evaluation to determine the severity of this constraint.

Many factories are currently being automated to improve cost effectiveness. For example, the fully automatic Datsun plant in Japan can produce 1300 cars per day with 67 plant personnel due to the large degree of automation. A General Motors Plant in this country with a similar capacity requires 1200 plant personnel[5]. It is believed that as further development of automation processes evolves, cost benefits will accrue for smaller production runs which will permit its application to reactor automated maintenance. However, even if costs are higher with an automated system it may still be desirable because it would further reduce the exposure of plant workers to the radiation environment of a reactor.

As contrasted to remote maintenance, current day practices for hands-on maintenance in high radiation areas restrict workers to strict control procedures and require supporting activities and equipment. These practices require that each task be planned as a no-risk activity where a job does not start until the equipment and procedures necessary to solve all existing and potential problems are available. Complete surveys of the extent and location of radiation fields and contaminated areas are made and corresponding restrictions placed on where the workers may work, how much time they can spend in a particular location and what protection they must have, such as protective clothing and portable shielding. These preparations are costly and time consuming. The limits on worker radiation exposure require large numbers of maintenance personnel to prevent over-exposure to individuals. In addition the radiation limits for personnel have steadily declined to the point at which available annual manhours per person are so low that machines are now more cost effective.

Maintenance operations are simplified by modularization. Instead of providing the time, manpower and equipment for in-situ testing and repair during a maintenance outage, on-hand pre-tested units are exchanged for failed or end-of-life units and reactor operation resumed. The removed units are transferred to the repair area where the time necessary for repair can be used without extending the reactor downtime.

The modular design approach also minimizes the complexity of remote maintenance by reducing the number of different kinds of maintenance operations required, and by permitting standardization of the connections so that

designs using simple push, pull or twist actions can be used. Fault isolation must be provided to the smallest replaceable module level so that when a failure occurs, the failed module is identified for replacement.

The reactor and its subsystems have been developed on the basis that STARFIRE is a well-understood, predictable machine which permits rapid replacement of those components where frequent maintenance is anticipated. Where necesary, this leads to sacrifices in ease of replacement of components that require infrequent maintenance. Items which will require periodic replacement and items which are expected to be life-of-plant have been identified. The life-of-plant components are expected to require occasional repair maintenance, but the frequency of occurrence combined with the time required for solving the problem are not expected to dominate the outages. The reactor components and their appropriate categories are listed in Table 19-5.

Table 19-5. Expected Maintenance Needs

Life-of Plant	Periodic Replacement
TF Coils	Blanket
EF Coils	Limiter
CF Coils	rf Duct
Shield	Shield door seals
Structure	Cryogenic System Components
	rf Window
	Vacuum Isolation Valves
	Power Supplies
	Crossed Field Amplifiers
	Compound Cryogenic Vacuum Pumps
	Misc. Pumps, Valves and Instrumentation

Most reactor subsystems will require some periodic repair or replacement. These operations, in general, are expected to be performed on a non-interference basis either during a scheduled shutdown or during reactor operation. As an example, the steam generators will likely develop some leakage over the plant life. If the leak approaches the tritium release limit (10 Curies/day) prior to a scheduled maintenance period, a shutdown or operation at 50% power will be required while tube plugging is performed.

The components requiring periodic replacement are modularized to simplify and speed the maintenance operations. The operations required for removal of modules are simplified by using a standardized drive unit which consists of a mechanism that is actuated by a turning motion. The concept for the unit is shown in Fig. 19-2. It will speed maintenance by minimizing the number of different motions required in any maintenance operation thereby reducing the complexity of the maintenance equipment. Guide pins are used for alignment and to minimize the loads reflected into the maintenance equipment. For light duty lifting operations, a latching system is provided to permit component lifting and removal. Heavier components will have built-in hoisting lugs for the remote maintenance equipment to use for lifting.

Mechanical seals are used for all equipment having scheduled maintenance operations. Their use eliminates welding or machining during maintenance. The primary and auxiliary coolant line disconnects are located outside the vacuum boundary so that less than perfect seals can be tolerated. This will reduce the need for repair of joints and should speed maintenance operations since extensive inspection during installation will not be required. The shield has been designed so that elastomer O-rings can be used at all sealing surfaces that are routinely separated during maintenance operations. These seals are located such that the radiation dose limit during the time between scheduled maintenance (e.g., six years for seals at the shield door) is not exceeded. These seals are accessable for maintenance and can repeatedly provide a high quality vacuum seal. The seals are replaced each time the door is removed. Single plane welded seals are used inside the shield where elastomer seals can not be used because of higher radiation levels and where no scheduled maintenance is planned. Reliable seals can be made at these joints and they can be cut off and be remade several times using a standard tracked welder. Dual seals are provided at all joints so that leaks can be detected by monitoring the pressure between seals.

19.3.2 Reactor and Subsystem Design Features

The reactor design has been developed to simplify maintenance to the greatest extent feasible. The design permits replacement of all components in a time consistent with its expected need for replacement. The exploded view of

Figure 19-3 illustrates the removal of major components. Further illustrations of the assembly sequence are also illustrated in Sec. 23.5. The major components in order of expected increasing replacement needs are: center post, support structure, TF coil, EF/OH coils, CF coils, shield, blanket and vacuum pump and isolation valve assembly. As indicated, blanket replacement requires removal of cooling lines, anti-torque panel and the shield door. The cooling lines and shield door will be replaced each time they are removed and refurbished for the next replacement sequence. The vacuum pump isolation valves, vacuum pump molecular sieve surfaces and first wall/blanket modules

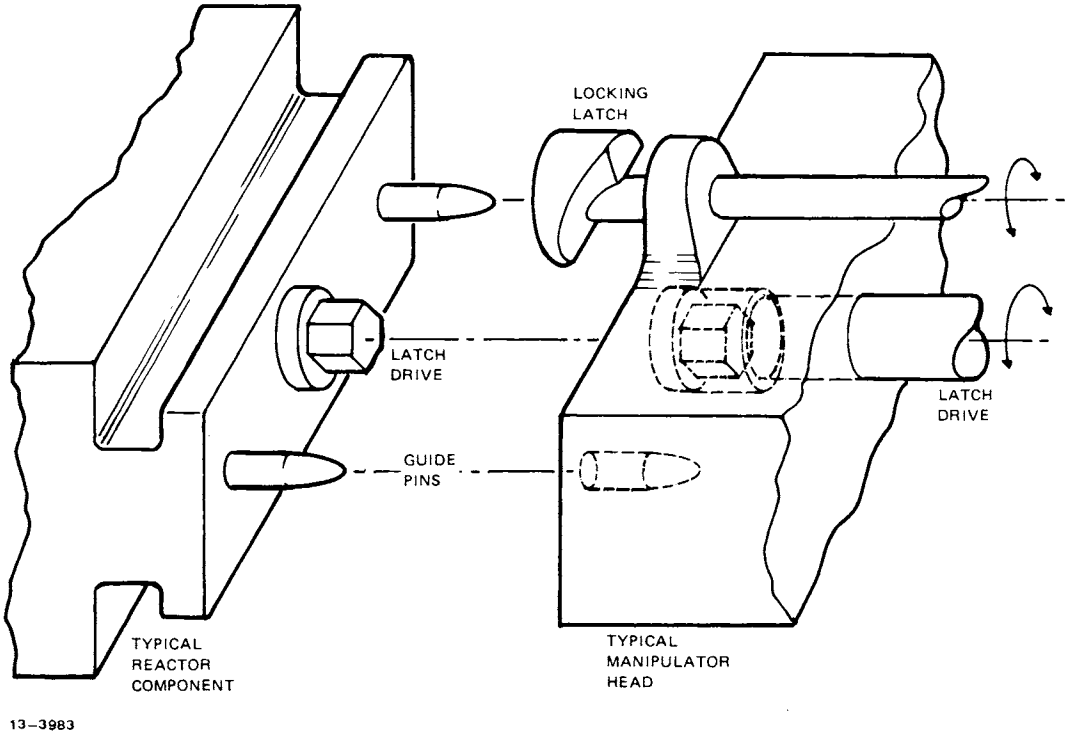

Figure 19-2. Standard automated latch system concept.

(including limiters and duct) are the only reactor components that require scheduled, routine maintenance. Ease of replacement of these items has therefore been emphasized in this study. Since reactor scheduled maintenance does not dominate the annual downtime, several scheduled operations can be added without affecting reactor availability. Failure of life-of-plant items such as the TF coil or shield can be permitted to result in longer outages since they will be very infrequent.

The weights of individual components were used to size the overhead crane, to establish the maintenance procedures and to determine the building

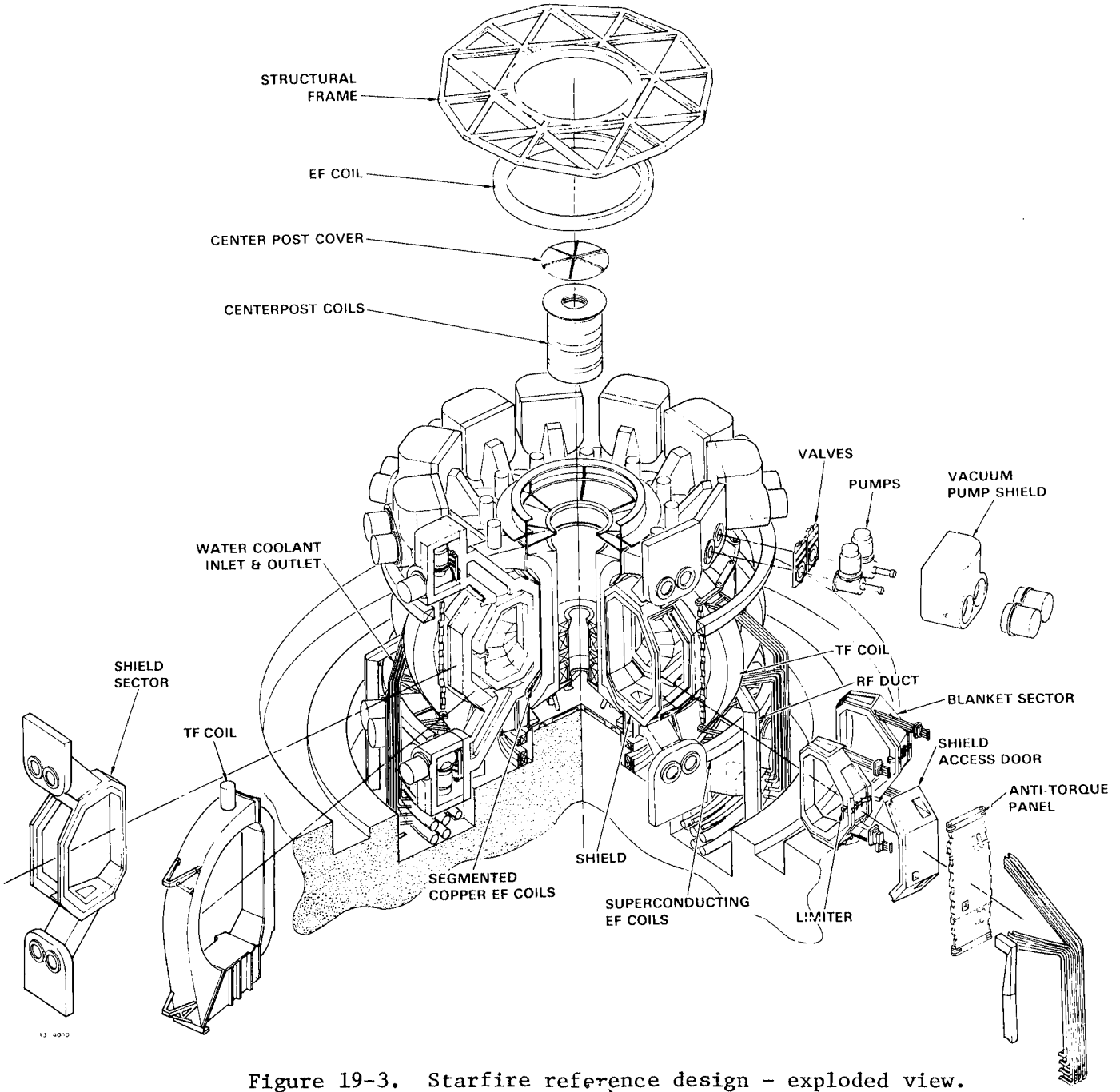

Figure 19-3. Starfire reference design - exploded view.

foundation load requirements. A summary is given in Table 19-6. The heaviest component that must be handled during scheduled maintenance is the shield door which weighs ∿ 156 tonnes. The 583 tonne TF coil which must be moved during construction or unscheduled maintenance established the requirement for the 600 tonne overhead crane.

Following is a discussion of reactor design maintenance features that have been defined.

Blanket sectors -- Blanket sectors are expected to have a 16 MW-yr/m^2 design life which translates to six years of reactor operation at 75% availability prior to their scheduled replacement. This relatively long life led to developing a blanket design where large, easily replaced modules are used. The concept adopted is similar in nature to the Culham design[6] and follows the recommendations of the Fusion Reactor Remote Maintenance Study[4] and the study Developing Maintainability for Tokamak Power Systems[7]. The objective was to minimize the amount of in-reactor maintenance for replacement of a failed part so reactor operation could resume while repairs are performed in a hot cell where more time and tools are available.

The blanket is divided into 24 toroidal sectors. Two different sector sizes are used to permit removal of blanket sectors through the shield door opening while providing clearance for cooling lines. (See Chap. 10 for further details.) Twenty-four sectors are used instead of twelve to permit the size of the TF and EF coils to be minimized with a resultant savings in capital cost and energy storage requirements. (See Chap. 5 for a more detailed discussion.)

The couplings for all blanket cooling lines are located outside the shield door. This eliminates the need for high quality vacuum tight connectors in the 15.2 MPa coolant lines and permits some leakage to be tolerated so that mechanical quick disconnects can be used. The penetration of the coolant line through the shield requires a low pressure vacuum seal at the shield door. This connection is discussed in Chap. 11.

The reactor coolant lines and rf ducts utilize groupings to minimize the number of operations required for removal during maintenance. The grouping

Table 19-6. Summary of Reactor Component Weights

	Unit (Metric Tonnes)	Required	Total (Metric Tonnes)
Center Post			
(Segmented Into 4 Parts)	280.	1	280.
TF Coil	583.	12	6,996.
EF/OH Coil			
EF (Center post)	45.	4	180.
OH (Center post)	39.	4	102.
EF/OH (Upper and Lower)	155.	2	310.
EF (Outer)	450.	2	900.
Inner CF	17.	2	34.
Outer CF	53.	2	106.
Blanket			
Large (16.3°) sector	65.	12	780.
Small (13.7°) sector	60.	12	720.
Shield Sector (W/O Door)	179.	12	2148.
Undercoil Shield Sector	226.	12	2712.
Vacuum Duct	116.	24	2793.
Pump Pod	160.	24	3840.
Shield Door	156.	12	1872.
rf Duct	6.2	12	74.
Support Structure	87.6	12	1,052.
Pumps, Valves, Misc.	1.	150	150.
			25,049.

is identified in Table 19-7. Five separate bundles are used for each pair of blanket sectors. Four of the bundles are identical (Bundle A). The fifth, Bundle B, includes the rf, ECRH, shield door and fueling connections. The connector for each of the five bundles uses a turning motion (torque) to provide the simultaneous seal closure/opening operation for all lines in the bundle. (See Fig. 11-26.) The connector is designed with guide pins so that only proximity location is required to engage latches. The manipulator then turns the drive mechanism to pull the joint together and effects the metal seal. All five coolant bundle penetrations through the shield vacuum boundary use redundant mechanical seals that are sealed using the same type of manipulator operation as for the high pressure coolant bundle couplings.

Table 19-7. Coolant Line Bundle Grouping

Bundle A	Number of Lines Required
Primary Coolant Inlet	4
Primary Coolant Outlet	4
Limiter Coolant Inlet	1
Limiter Coolant Outlet	1
Tritium Purge Inlet	1
Tritium Purge Outlet	1
Reflector/Multiplier Vent	1
Seal Leak Monitor	1
Instrumentation	As Required
Bundle B	
rf Duct Slots	36
rf Coolant Inlet	1
rf Coolant Outlet	1
ECRH Duct	2
ECRH Coolant Inlet	1
ECRH Coolant Outlet	1
Shield Door Coolant Inlet	1
Shield Door Coolant Outlet	1
Seal Leak Monitors	2
Instrumentation	As Required

All sectors include a limiter and the 12 sectors that are located between TF coils also include an rf duct grill and ECRH duct. These components can be removed and replaced in the hot cell.

The blanket sectors are moved on gas bearing pads that make the unit easy to move (approximately 1 kg lateral force per 2000 kg weight). The removal path of the sector is guided by the automated rail mounted manipulator which attaches to the blanket sector. Blanket removal operations are discussed in detail in Sec.19.3.3.

Vacuum Pump System -- The cryopump and isolation valve systems are shown in Fig. 19-4. The isolation valves have design lives that are limited to 2000 cycles for the gate valve and 8000 cycles for the right angle valve. Provisions have been made in the shielding design to permit quick access to the entire pump and valve assembly by removing the shield cover. The standardized latch drive (Fig. 19-2) is incorporated for ease of cover removal.

The gate valve, located in series with the right angle valve, is included to permit the vacuum system to remain sealed when a right angle vacuum seal is replaced and to provide redundancy in event of isolation valve failure. The right angle valve is normally cycled every two hours for pump rejuvenation and therefore will require replacement every two years. A small plug is incorporated into the shield design to permit access to the right angle valve stem for replacement of the seals without disturbing the rest of the vacuum system. The valve stem is designed so that a standardized latching drive can release or reattach the valve stem and the actuator controls.

The vacuum pumps use a molecular sieve material that is expected to deteriorate with vacuum pump operation. Currently vacuum pump manufacturers recommend that these components be replaced annually; however, it is expected that pump operation can be continued for two years in STARFIRE since operation in a clean environment is planned. The pump and valve will normally be removed as a unit; however, in event of an unscheduled shutdown for valve failure, the small shield plug is removed for valve seal replacement.

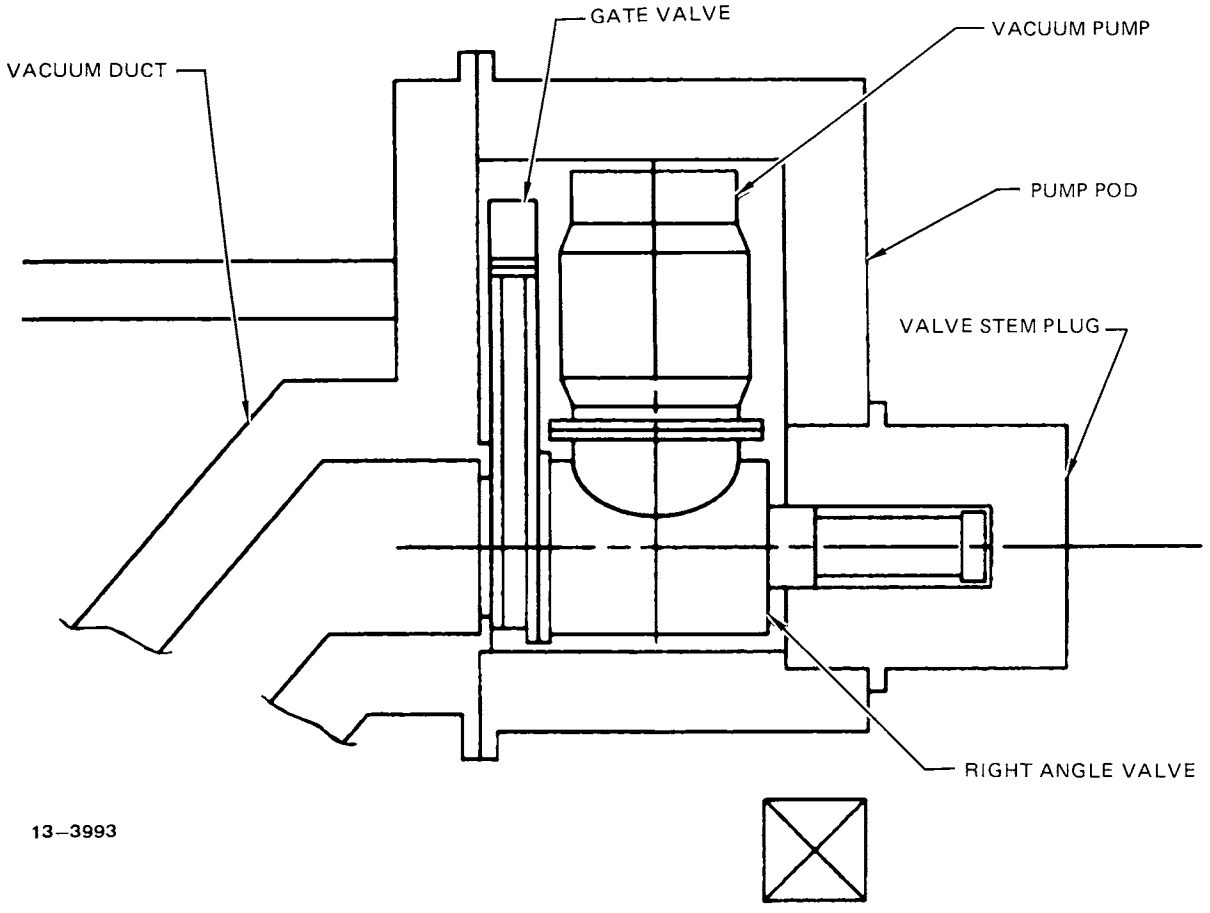

Figure 19-4. Vacuum pump isolation valve.

Shield -- The shield is designed for life-of-plant; however, it has been designed to accomodate infrequent replacement of a failed sector. The shield is divided into 24 toroidal sectors to permit installation between TF coils. Joints between shield sectors are flange welded on the inner surface at installation. Attachments in the shield are provided so that a track can be installed and a remotely operated welder/cutter can be used to cut and later reweld the seal. A mechanical seal is provided behind the weld to permit sequential injection of tracer gas for detection of a leaking seal weld.

Replacement of a shield sector requires use of the overhead crane for hoisting the sector from the machine. The vacuum ducts are a permanent part of the large shield sector to simplify sector installation and removal operations.

The shield door is the only part requiring scheduled maintenance. It incorporates standardized latches and dual elastomer seals. It is removed

each time the blanket sector is replaced. Two replacement units are provided so that seal replacement can be acccomplished in the hot cell.

EF and OH Coils -- The EF and OH coils can be replaced with minor reactor dissassembly. The complications associated with replacement of the EF/OH coil trapped beneath the reactor lead to inclusion of a spare coil. A failed coil can be cut and removed and the spare moved into place and connected without disturbing the surrounding components. The upper EF/OH coil requires removal of the upper structural grid frame to provide access for replacement. The large outer EF coils can be replaced by the overhead crane after the upper vacuum pumps are removed. The centerpost EF-OH coils are contained in two separate modules of four coils each to permit their removal while minimizing building height. Their removal requires warm up of the TF coils and EF/OH coils in the center post. The vacuum boundary is opened at the top of the center post by cutting a welded seal. The electrical and cryo leads are then accessable for each module. Subsequent cutting of electrical and cryo leads permits the overhead crane to hoist the coil modules out to permit replacement of the module with the failed coil.

TF Coils -- The TF coils are designed as twelve individual units that include the room temperature vacuum tank. Heat leak and design complexity considerations required use of a welded common dewar at the center post. Coil removal requires removal of the nearby blanket and shield sectors, CF and EF coils, and represents a major reactor repair. The common dewar is cut and rewelded by mounting a welder/cutter track to the center post. The mechanical attachment to the center post is removed through the top of the center post vacuum opening.

Leak Detection -- Leak location is a key element in minimizing system downtimes. A system has been incorporated into the blanket and shield designs that permits rapid detection and location. The Instrument and Control (I&C) section of this report (Chap. 17.0) describes how monitoring systems will be continuously scanned to provide data on the reactor status. This paragraph discusses the features that have been incorporated into the design to monitor leakage and provide inputs to the I&C system.

A Residual Gas Analyzer (RGA) is located at each vacuum duct to continuously monitor impurities in the plasma exhaust. Changes from the norm are expected in event of leaks. Ref. 8 has shown that location of leaks to within a 90° sector of the torus is possible by comparing the differences in impurity concentration at each RGA. This will reduce the area that must be searched for leaks. Searchs for leaks will be made primarily by injection of tracer gases or by changes in impurity concentration due to changes in differential pressures across leaks.

The two types of anticipated leaks in the shield are those through seals and structural leaks. Provisions for location of leakage through seals has been provided by using the two types of seal designs shown in Fig. 19-4. The redundant seal is used in areas where frequent component removal is required, whereas the welded seal is used only where infrequent removal is required. Redundant sealing is used at the shield door seals, vacuum pump and valve seals and at the dielectric break in the shield. Details of the design are discussed in Chap. 11. Seal materials are selected on the basis of the radiation fluence limits. Elastomer seals are used at the outer surface of the shield, metal seals are used at the vacuum pumps and valves and a permanently bonded polyimide seal is used at the dielectric break.

Detection of leaks through the redundant seals is provided by monitoring the pressure between the seals. During operation, the pressure between seals will be reduced to approximately one torr. In the event of leakage between either the atmospheric pressure side or the vacuum side, the increase or decrease in pressure will indicate which seal is faulty. Operation can then continue using the good seal until replacement is convenient.

The permanently welded seal joint is used in high radiation fluence areas because of its inherent reliability, especially in the sizes required for poloidal shield seals. The design shown in Fig. 19-5 was selected because of the limited access and the need for the capability of remotely making and breaking the seal. It incorporates a welded seal and a spring clip. The spring clip provides a cavity to help contain tracer gas for leak detection. Leak detection for the welded joint is incorporated in the following manner. First, in-leakage from the reactor building will be detected in the plasma chamber by continuously processing the output of the

vacuum system. When the carbon dioxide concentration changes significantly a leak is present. Monitoring of the redundant seals will indicate if a failure has occurred in these areas, if not, a seal weld is assumed to have failed. Sequential injection of isotopic tracer gas in each of the seal cavities will indicate the leaking joint. The leak rate will determine when machine shutdown is necessary.

Leakage through the structural walls of the shield is considered less likely to occur because of the design margins that are incorporated into the design; however, leak detection capability is provided. The shield incorporates vented structural canisters that are cooled by water in coolant tubes. Each canister can be pressurized sequentially by tracer gas to determine if a leak exists. Water leaks will be detected external of the shield by water leakage out of the vents.

Leaks in the blanket must be isolated to one of the 24 individual sectors so it can be replaced. Possible leaks are from the coolant, the multiplier and reflector cavity and the tritium purge system. Each blanket sector coolant system is manifolded separately to permit isolation for leak detection. Coolant leaks would be detected by residual gas analyzers

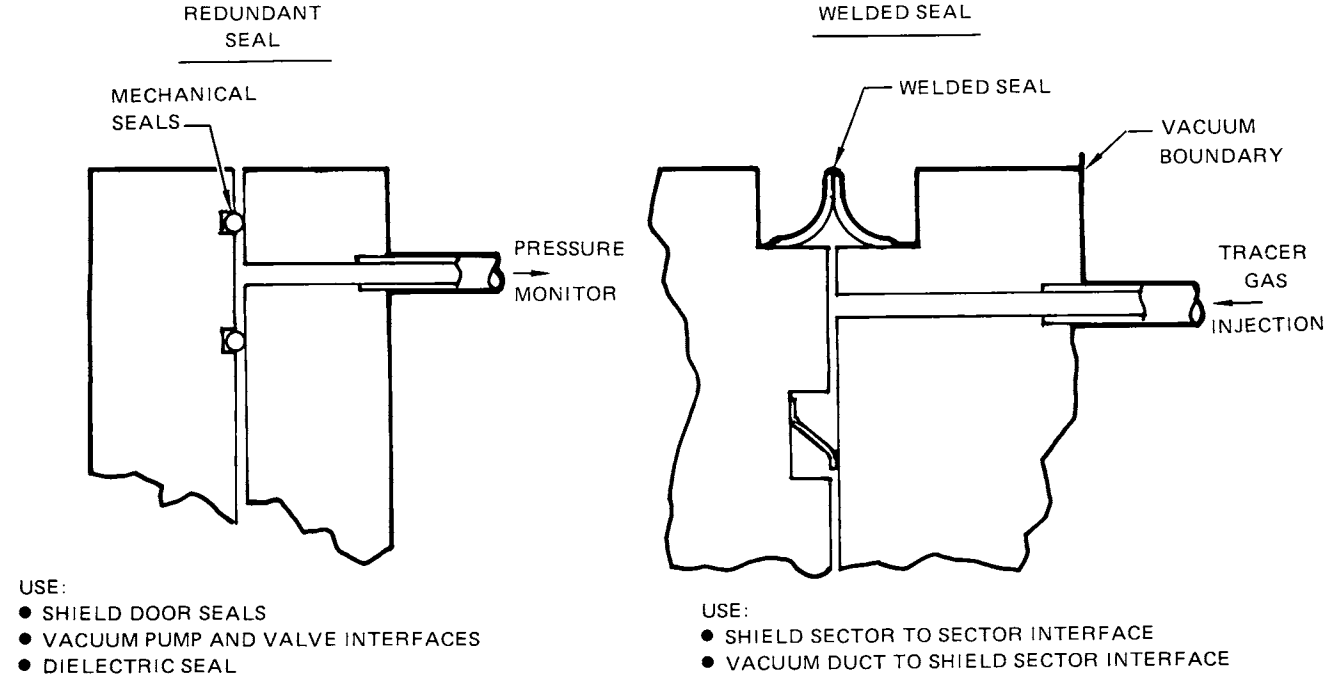

Figure 19-5. Seal design.

in the vacuum system. When a leak is detected, each sector will be isolated sequentially and the coolant pressure decreased. Changes in the leak rate will indicate a faulty module. The tritium purge system and the vent line to the reflector and multiplier cavities are leak detected in a similar manner. Further discussion of blanket leak detection is given in Chap. 10.

Vacuum Wall Cleaning -- Vacuum chamber cleaning of the STARFIRE reactor will be critical to proper operation. The purpose of the cleaning is to remove adsorbed gases from the vacuum surfaces. These gases are desorbed during attempted plasma operation causing contamination of the plasma which may prevent obtaining proper plasma burn conditions. Two scenarios are discussed. The first case involves the cleaning of STARFIRE during installation and in preparation for the first burn; the second case concerns the cleaning required after major vacuum system openings for scheduled and unscheduled maintenance. In order to maximize reactor availability it is imperative that the cleaning time be minimized after maintenance is completed.

During the design phase of the STARFIRE reactor, precautions must be taken to select proper materials and fabrication methods to minimize outgassing and virtual leaks. Each component exposed to the vacuum environment will be chemically cleaned prior to installation, the particular cleaning method for the various components will depend on the materials of construction. When construction is complete and the vacuum vessel is verified to be leak tight, the vacuum system will be pumped to below 1×10^{-6} torr and in-situ cleaning will be initiated. The coolant for the first wall/blanket will be heated externally and circulated to raise the temperature of the first wall and blanket to 320°C, providing a vacuum bakeout. It is anticipated that the temperature of the shield will reach $\sim$100°C during this bakeout.

Concurrent with the bakeout of the entire vacuum vessel, glow discharge cleaning will be performed. The purpose of the glow discharge cleaning is to accelerate the removal of adsorbed gases from the first wall and limiter. The limiter slot, the backside of the blanket and the shield need not be glow discharge cleaned because energetic ions and neutrals will not be incident on

these surfaces during normal operation. A low power Taylor Discharge Cleaning (TDC) (Ref. 9) method will be employed. The vessel will be backfilled with hydrogen to approximately 1×10^{-4} torr with the high vacuum cryopumps operating; a continuous purge will be maintained. The ECRH heating system will then be pulsed at a rate of approximately 5 pulses per second at a power level sufficient to produce a wall loading of 0.05 watts/cm^2. The pulse duration will be 0.04 s. For initial cleaning after installation, approximately 10^5 to 10^6 pulses will produce a clean system with a Z_{eff} near 2.0. This entire vacuum bakeout and glow discharge cleaning process will be accomplished in 3 to 5 days. The pulse length, power level and number of cycles were calculated using the methods recommeded in Ref. 9. The STARFIRE configuration, with a single belt limiter, will provide a highly exposed first wall which is conducive to effective glow discharge cleaning.

Another cleaning scenario is that required after a major vacuum system opening for maintenance. The amount of time required for cleaning becomes quite critical, as it affects the reactor availability. After the completion of maintenance and the vessel is verified to be leak tight, it will be pumped to below 1×10^{-6} torr and the vacuum bakeout and glow discharge cleaning will be performed. The approach will be exactly as described above, except that the number of pulses can probably be reduced by a decade, since precautions will be taken to maintain a known gaseous environment throughout the maintenance period. Presently, carbon dioxide is the backfill gas during maintenance; however its effect on cleaning time has not been fully investigated. Discharge cleaning with 10^4 to 10^5 TDC pulses, and a choice of the proper backfill gas, is expected to result in a total cleaning time of approximately 1.5 days.

19.3.3 Maintenance Facilities

The maintenance facilities consist of the reactor building, the hot cell, the support building service area and the reactor building remote maintenance control room. Remote maintenance developments in major nuclear facilities, Table 19-8, have been reviewed and utilized in developing the STARFIRE maintenance approach and design. A goal of 500 millirem/year has been established as the personnel limit.

The maintenance approach developed for the Hot Experimental Facility (HEF) fuel reprocessing plant at ORNL has provided much remote maintenance technology which can be utilized for STARFIRE. The STARFIRE maintenance approach has benefited from the development of the following HEF concepts:

- Total remote maintenance technology.
- Monorail system for remote vehicles.
- Universal monorail maintenance vehicle with force-reflecting servo-manipulators.
- Replaceable process modules.
- Replaceable components within process module assemblies.

Most maintenance tasks which are performed by remote maintenance equipment can be programmed to speed up operations, to reduce operator fatigue and to minimize errors. Since machine control signals will be handled through dedicated central processor units (CPU), program information can be inserted to automate the operation and to perform other functions such as ensuring safe operating loads and defining operation envelope work space. Individual dedicated CPU's can be interfaced with a supervisory CPU to ensure coordination of maintenance activities and to avoid interference of one vehicle with another. Intermediate checkpoints will be programmed into operational sequences to stop equipment for verifying position and for performing inspections.

19.3.3.1 Reactor Building

Several reactor building shapes were considered for STARFIRE. These include dome, horizontal, cylindrical, vertical cylindrical and rectangular shapes. A rectangular building shape shown in Fig. 19-6 was selected as the reference design based on the following criteria:

- Best space utilization
- Good crane coverage
- Minimizes crane span
- Relatively easy to fabricate
- Acceptable cost
- Acceptable overpressure capacity
- Compatible with a remote maintenance monorail scheme

Table 19-8. Nuclear Facilities Employing Total Remote Operations

1. Hot Fuel Examination Facility - North - (HFEF/N) ANL-IDA
2. Hot Fuel Examination Facility - South - (HFEF/S) ANL-IDA
*3. Fuels and Materials Examination Facility - (FMEF) W Hanford
4. Engine Maintenance/Assembly/Disassembly Bldg - (E-MAD) W NRDS
*5. Fermi National Accelerator Laboratory - (NAL) Batavia, ILL
*6. Hot Experimental Facility - (HEF) ORNL
7. Tokaimura Reprocessing Plant - (TRP) Japan
*8. Cern Proton Synchrotron - (CPS) Switzerland

* Utilize Servo Force-Reflecting Manipulators

The STARFIRE reactor building is a reinforced concrete structure characterized by externally ribbed buttressed walls and roof. The overall internal dimensions are 120 m x 50 m x 42.5 m high. All inner surfaces of the building are flat and free of protrusions which could complicate the arrangement of the reactor or reactor support equipment. A steel liner is provided as an absolute environmental barrier. A carbon dioxide atmosphere is used at a negative 2.54 cm water gage pressure.

The reactor building contains the reactor, selected support system modules, and required maintenance equipment. As shown in Fig. 19-6 the reactor is located at one end of the building. The support system modules are organized within the central area. The other end of the building contains the crane bay maintenance area, the personnel airlock to the crane bay maintenance area, the equipment airlock between the hot cell and the main floor of the reactor building, laydown space for the support system modules, and parking space for the reactor building maintenance machines. The reactor

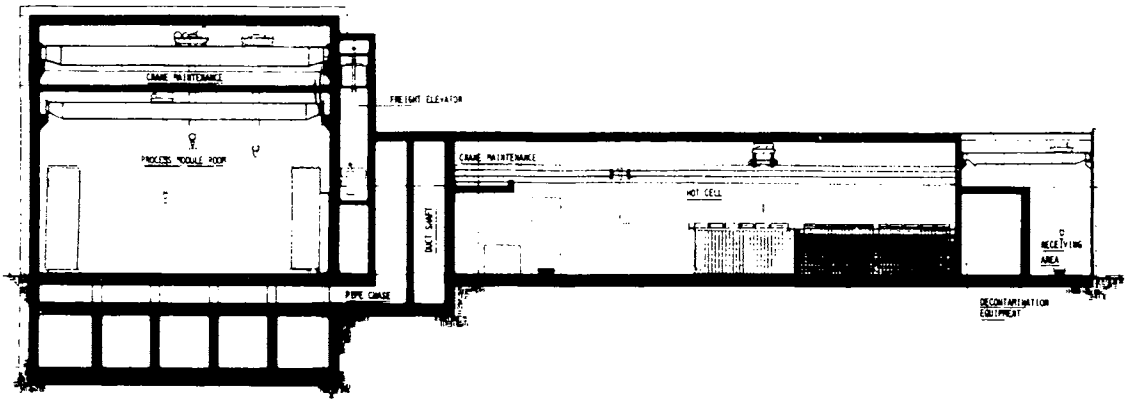

SECTION – REACTOR BUILDING, HOT CELL

B–B (ROTATED 90°CCW)

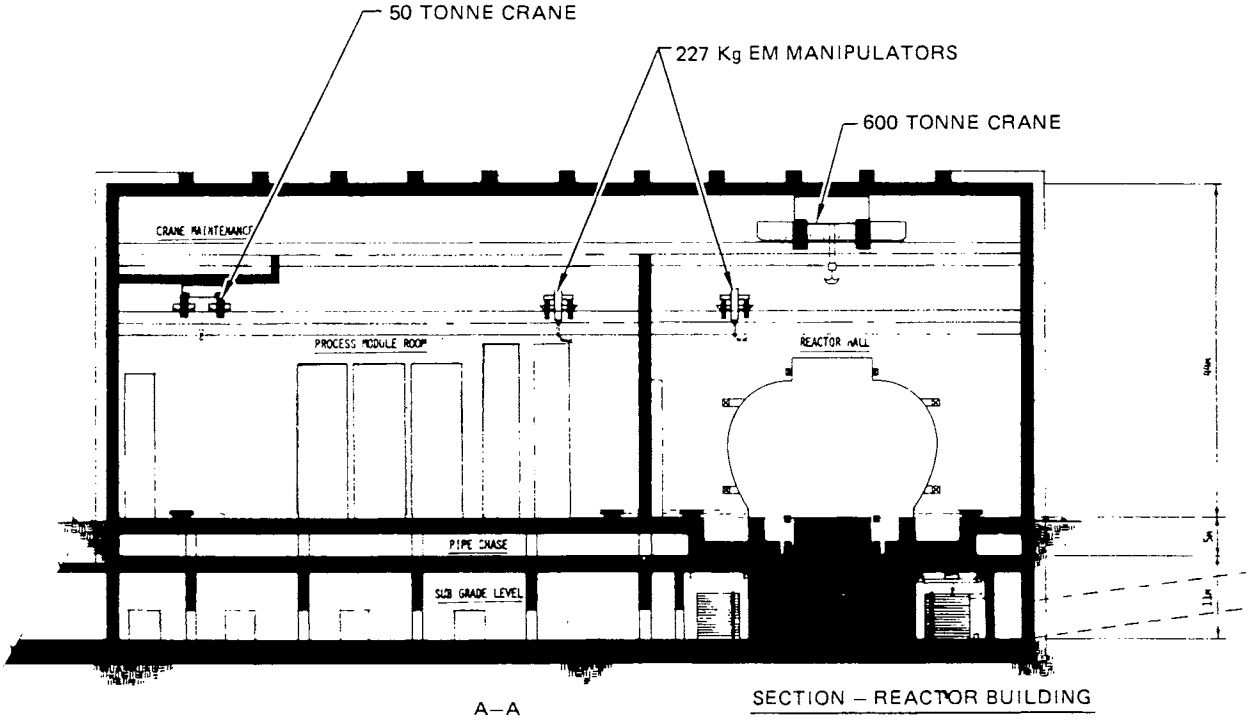

A–A

SECTION – REACTOR BUILDING

13–4109

Figure 19-6. Reactor building and maintenance facility.

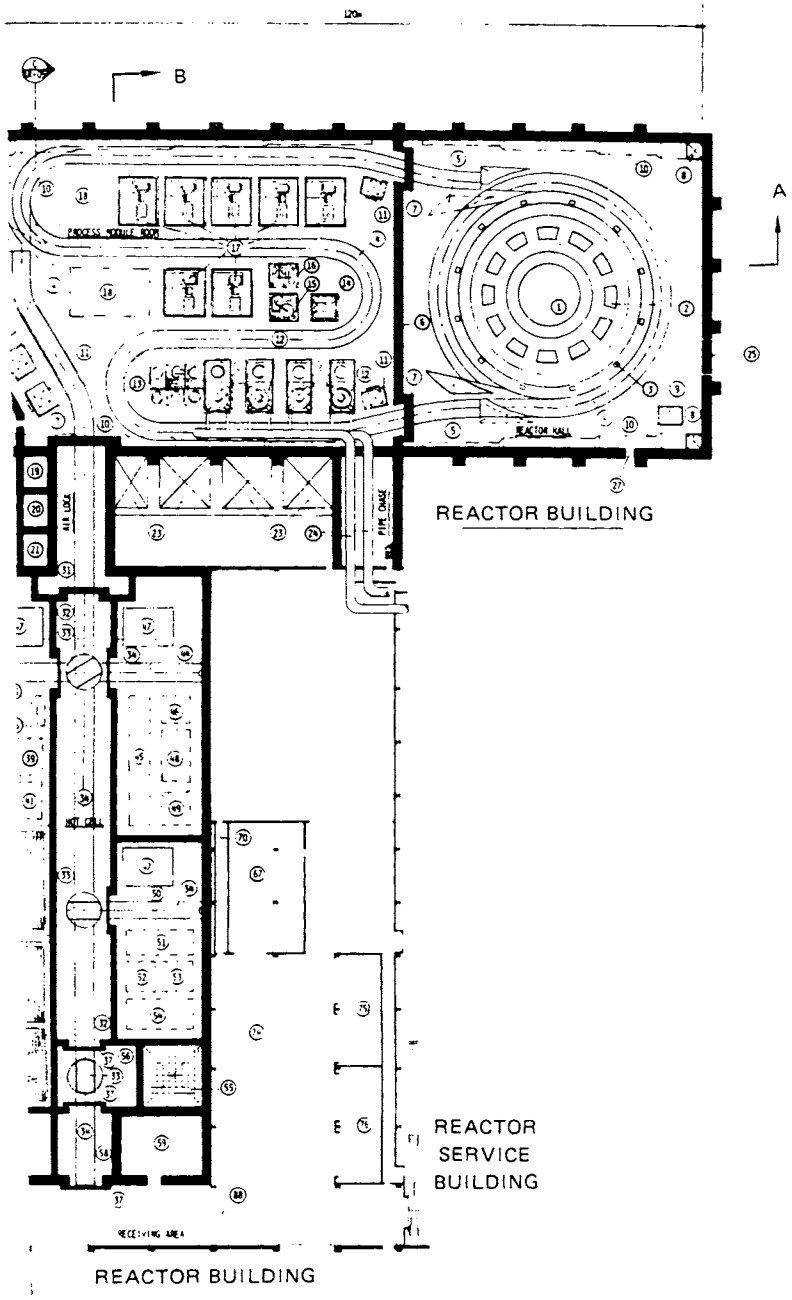

1 TOKAMAK FUSION REACTOR SUPPORT PEDESTAL
2 TF COIL SUPPORT PEDESTALS
3 RF DUCTS
4 MONORAIL TRACK
5 MONORAIL SWITCHING SEGMENTS
6 SHIELD WALL
7 SLIDING SHIELD DOORS
8 SUPPLY AIR DUCT SHAFT
9 ACCESS HATCH TO PIPE CHASE
10 SUPPLY AIR DUCT
11 HVAC MODULE
12 STEAM GENERATORS & PRIMARY LOOP MODULE
13 LIMITER FEEDWATER LOOP MODULE
14 VACUUM PUMP/BLANKET PURGE MODULE
15 PRIMARY LOOP MODULE
16 RF SYSTEM COOLING MODULE
17 ATMOSPHERIC TRITIUM PROCESSING SYSTEM
18 LAY-DOWN SPACE
19 ELEVATOR PIT (ABOVE)
20 PIPE SHAFT
21 DUCT SHAFT
22 TUNNEL TO STACK
23 AREAWAYS TO LOWER LEVEL
24 MAIN STEAM PIPE LINES
25 SEGMENTED REMOVABLE PANEL 32m HIGH
26 EMERGENCY STAIR
27 EMERGENCY EXIT
28 ACCESS MATCH TO SUB-GRADE LEVEL
29 not used
30 not used

HOT CELL

31 SLIDING PRESSURE RESISTANT DOORS
32 CENTER CORRIDOR
33 MONORAIL TRACK TURNTABLE
34 MONORAIL TRACK
35 BLANKET MODULE & SOLID WASTE PROCESSING
36 BLANKET MODULE HOLDING AREA
37 SLIDING SHIELD DOORS
38 INSPECTION, DISASSEMBLY & SEGREGATION AREA
39 TREATING & CUTTING AREA
40 BAKING & OUTGASSING AREA
41 CLEANING, COMPACTING, PACKAGING
42 DRY STORAGE CUBICLES
43 WET STORAGE TANKS
44 REMOTE MAINTENANCE & REPAIR SHOP
45 REMOTE MACHINE SHOP TOOLS
46 DISASSEMBLY & DIAGNOSTIC AREA
47 ATMOSPHERIC TRITIUM PROCESSING SYSTEM
48 LARGE EQUIPMENT ITEMS AREA
49 SMALL EQUIPMENT ITEMS AREA
50 LIQUID WASTE PROCESSING
51 RECEIVING & STORAGE VESSELS AREA
52 CHEMICAL TREATMENT AREA
53 PHYSICAL TREATMENT AREA
54 DRUMMING, DECONTAMINATION, TESTING & INSPECTION AREA
55 STORAGE
56 DECONTAMINATION CHAMBER
57 DECONTAMINATION EQUIPMENT & CONTROL
58 AIR LOCK
59 HOT CELL CONTROL ROOM
60 not used

67 MACHINE SHOP

REACTOR SERVICE BUILDING

74 PREPARATION & MAINTENANCE AREA
75 PARTS STORAGE
76 NEW BLANKET STORAGE
88 RAILROAD SPUR

and the support system modules are maintained with (1) equipment that is mounted on a monorail system; (2) overhead cranes; and (3) bridge-mounted electro-mechanical manipulators. All viewing is by means of remote Closed Circuit Television (CCTV). Building area lighting and special lighting in maintenance areas is required. Heating and ventilation is designed to provide desired plant equipment service conditions.

The rectangular shape of the reactor building improves the maintainability of plant equipment compared to a circular building design. A pipe chase located under the reactor contains the sealed penetrations for all ducts, piping, and electrical conduits.

Interconnecting plant piping, electrical conduits, cable trays, and ventilation ducts are all routed through the pipe chase to keep the main floor of the reactor building relatively free of obstructions. Maintenance of piping, valves, electrical connections, HVAC equipment, instrument lines, and diagnostic monitoring equipment transmitters is anticipated in the pipe chase area. Hatches are provided between the main floor of the reactor building and the pipe chase. A mobile manipulator system will be required to provide inspection surveillance and repair capability in the pipe chase area.

Utilities and provisions for emergency personnel access will be provided in the reactor building and basement areas in the event of an unanticipated failure of the maintenance equipment or problem for which special attention is desired. These provisions may include special shielding, access ladders and platforms, breathing air connections, high pressure air, demineralized water, electrical outlets, inert gas, and possible ventilation hookups. These provisions will be of value primarily during plant construction and initial startup and trouble-shooting operations.

A control station area for the operation of the reactor building maintenance equipment is included in the main control room in the administration building. Approximately 180 m^2 of floor area is required.

A bi-parting sealed sliding door is located at the reactor building air lock. Door seals will be replaceable from the hot cell side of the airlock.

The hot cell is connected to the reactor building via an air lock system to minimize the volume of the reactor building. General functions of the hot cell include wet and dry storage, decontamination of non-activated components, monitoring and packaging of components to be handled in the reactor service area (contact maintenance area), and containment of tritiated components and other contaminants which may become airborne or waterborne.

Service Conditions -- Following are special considerations for equipment in the fusion reactor environment.

The reactor building environmental control equipment is designed to maintain the following ambient conditions:

Pressure:	-2.54 cm Water Gage
Temperature:	32-35°C
Humidity:	50-60% RH (operating)
	40-50% RH (shutdown)
Inert Chemistry:	Carbon dioxide

Nonmagnetic materials must be used for any equipment which is designed to operate near the reactor during operation. Magnetic materials such as motor cores must be shielded or otherwise protected.

Support System Modules -- Only support system modules that are potentially activated or contaiminated are located in the reactor building.

The support system modules located in the reactor building are:

- Tritium processing and recovery
- Reactor building HVAC
- Residual Heat Removal Loop
- Steam generators
- Primary loop components
- Limiter feedwater loop components
- Vacuum pumps

All of the support system modules, with the exception of the tritium cleanup units, are 4.6 m x 4.6 m x 21.5 m high. The tritium cleanup units are 8.5 m x 8.5 m x 21.5 m high. The modules are designed for total remote

maintenance using monorail-mounted maintenance machines and the overhead cranes and electromechanical manipulators. The modules are positioned within the reactor building to provide adequate access for the remote maintenance machines. Maintenance of the support system modules is accomplished by removing and replacing a whole module or by removing and replacing a failed subcomponent within a module. The failed module or subcomponent is transported to the hot cell, on the monorail, for further repair or disposal. The primary coolant system, shown in Fig. 19-7, illustrates the approach used to achieve a space efficient, remotely maintainable modularized installation.

All of the utilities for the support system modules are routed through the reactor building pipe chase. These utilities include piping, HVAC ducts, electrical, diagnostics, and instrumentation. Disconnects suitable for remote applications are provided on all of the support system module's utilities. Access to the reactor building pipe chase is provided by several hatches through the reactor building main floor. The reactor building basement is serviced by a mobile manipulator vehicle. Personnel access is possible when the reactor is shut down and radiation levels permit.

A 1-1/2 meter-thick shield wall isolates the reactor from the process modules and permits remote maintenance of process modules while the reactor

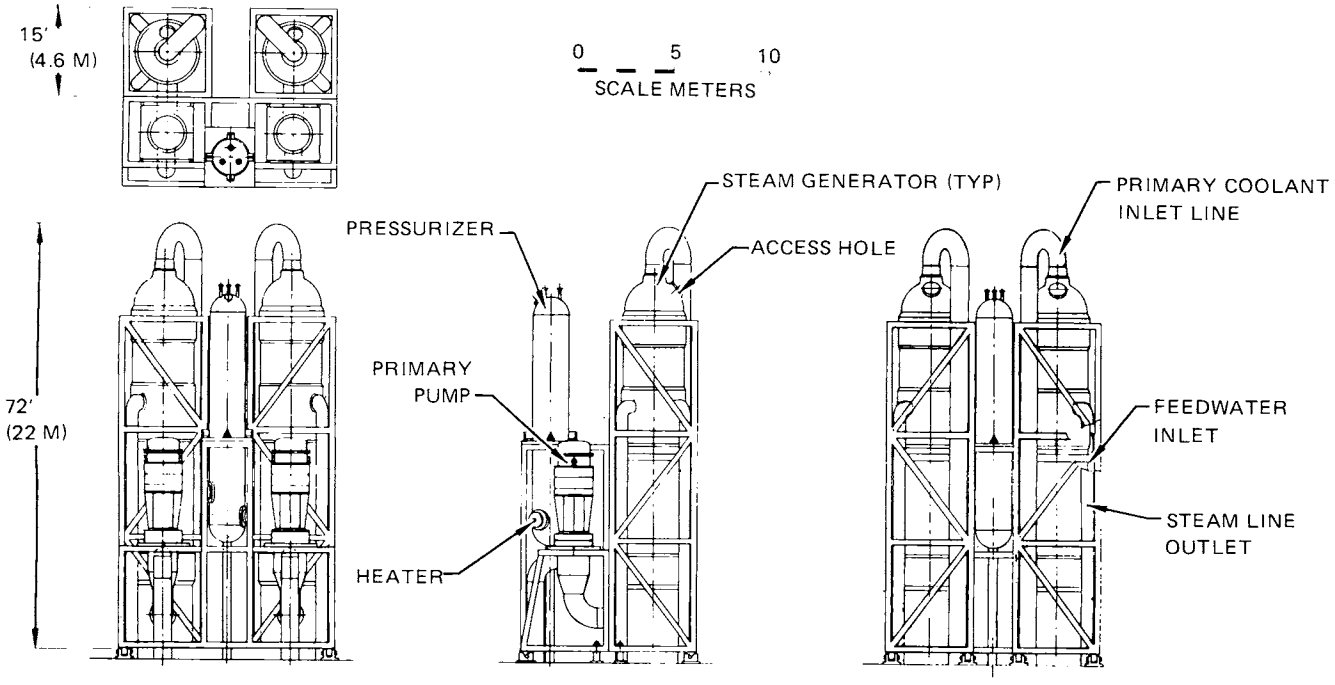

Figure 19-7. Typical support system module - primary coolant loop.

is operating. This wall serves as a neutron shield for the process modules and as a missile shield for the reactor. Two electric motor-driven sliding doors provide ingress and egress for the monorail system. The need for overhead shielding to attenuate radiation streaming and reflection over the primary shield wall will be evaluated. Additional suitable shielding such as labyrinth sections in the ceiling or doors will be provided if necessary.

Crane Maintenance Bay -- Two overhead bridge cranes and two overhead electromechanical manipulators supplement the monorail mounted maintenance equipment. The reactor is maintained by a 600-tonne capacity bridge crane and a bridge mounted 227 Kg capacity electro-mechanical (EM) manipulator. The service support modules are serviced by an additional 60-tonne bridge crane and a second 227 Kg (500-pound) electro-mechanical manipulator. The 50-Tonne service support module crane and EM manipulator are located at a lower elevation than the reactor crane.

The reactor building crane bay is situated to provide a maintenance area for the overhead bridge mounted units as well as a shielded parking area for the reactor overhead bridge units. Hands-on maintenance in the crane bay is possible when the reactor is shut down. A personnel airlock connects the shielded crane bay maintenance area with the reactor service building. Remote maintenance will be possible during plant operation. To facilitate remote maintenance, a pair of bilateral force-reflecting manipulators, together with overhead lifting equipment, lighting, and closed circuit television (CCTV) is provided within the crane bay.

The crane bay entrance incorporates a series of segmented steel pivoted shield doors as shown in Fig. 19-8. These doors protect suited personnel that perform maintenance tasks in the crane bay and provide additional shielding for stowed bridge-mounted units. The doors are hinged from the ceiling structure at the entrance to the crane bay. A redundant cable system is used to pivot each door segment up against the ceiling. Cable winches are electric motor-driven. All mechanical equipment is fully accessible for maintenance.

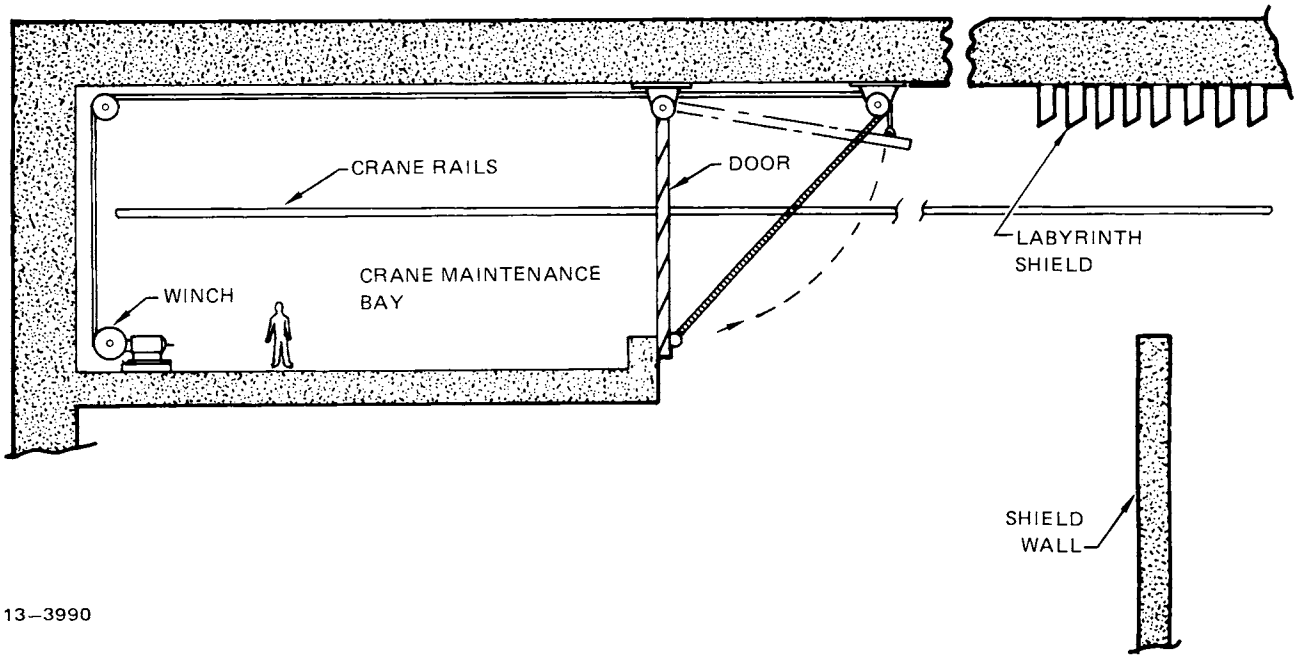

Figure 19-8. Crane maintenance bay.

Monorail System - A single monorail system provides maintenance access to the reactor and to the support system modules, and allows for equipment and material movement in the reactor building and the hot cell. The monorail track is 3 m wide and 1 m high. The large monorail track provides stability for the maintenance machine as well as the required load carrying capacity. While a maintenance machine is in position to perform a given task, additional stability is obtained by locking the machine to the monorail. Power and control for the maintenance machines are supplied by busbars on the monorail. Control of the maintenance machines is preprogrammed with manual override. The monorail system allows precise position location and good repeatability for maintenance machines to perform programmed tasks.

The monorail system accommodates electrical self-propelled equipment transfer carts, manipulator platforms, dedicated maintenance machines, and reactor component handling tools. All vehicles traveling over the monorail system are capable of retrieval should they malfunction. Except for minor repair and adjustment, monorail mounted devices will be remotely maintained in the reactor service building after decontamination.

Two sliding switch assemblies communicate the circular reactor service track with the serpentine support system module track. A third sliding switch assembly ties the support system module track into the reactor service building track which connects the reactor building and the reactor service building hot cell through the equipment airlock (see Fig. 19-5).

Monorail switches have the following features:

- o Switches operate with only one degree of freedom
- o Switches translate along the plane of the floor a minimal distance of approximately 0.8 meter
- o Switch design maximizes safe passage of monorail-mounted vehicles.
- o There are two sliding monorail elements at each switch location - one rail element for each of the two intersection tracks
- o Switch is not operated under loads.

Figure 19-9 depicts the general arrangement of a typical switch. With this switch concept, it is not necessary to have the vehicle parked on the

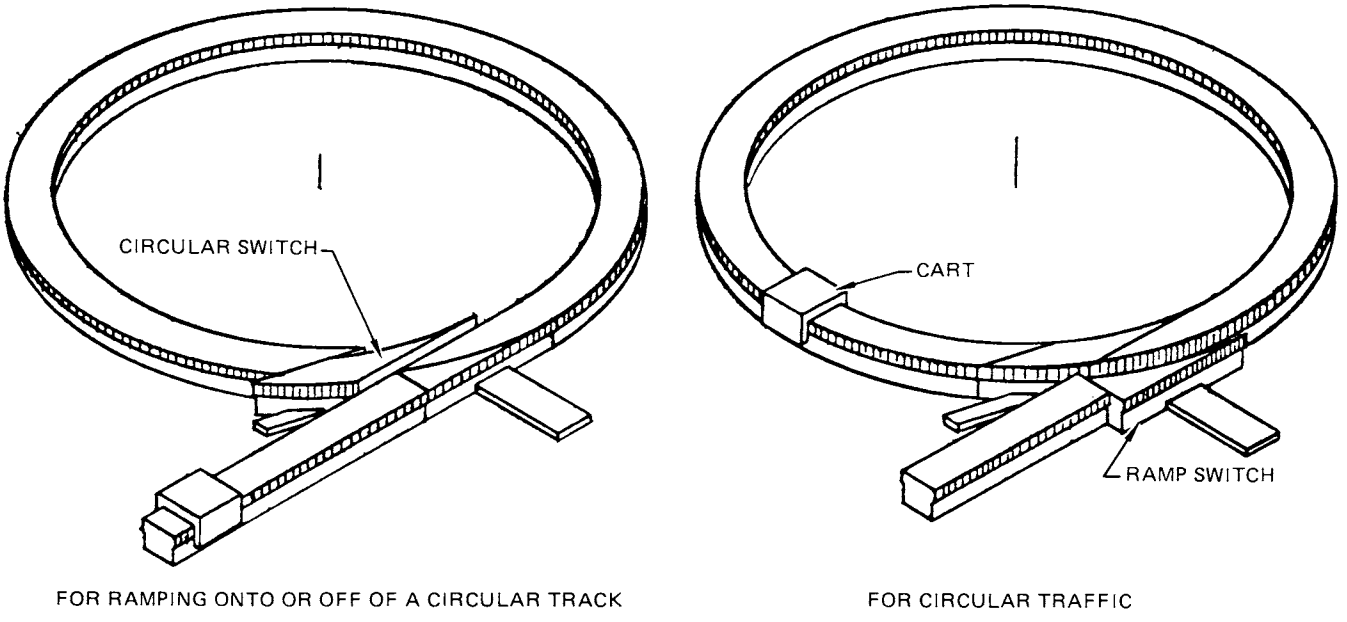

Figure 19-9. Monorail switching system.

switch when the switch is actuated. The articulating elements are supported on stationary guide rails. Bearing assemblies are integral to the articulating elements. The bearing assemblies are readily accessible for servicing

and adjustment without removal of the rail element. Rail elements are translated by redundant pairs of electric motor-powered rack and pinion drives. Each rail segment is automatically latched in the engaged position to preclude movement under vehicle load.

19.3.3.2 Hot Cell Facility

The hot cell is located adjacent to the reactor building in the turbine and support building. Locating the hot cell outside of the reactor building minimizes reactor building size, minimizes the volume contaminated by tritium in an accidental release, and provides less potential for contamination of hot cell equipment. The equipment air lock connects the reactor building to the hot cell. Communication between the hot cell and the reactor building is via a monorail system. The equipment airlock and hot cell are sized to handle all reactor building components except the large EF coils and TF coils. Shield sector removal is possible with both airlock doors open.

The hot cell is shown in Fig. 19-6 and consists of a central corridor containing the monorail with working and storage areas on either side . At one end of the corridor is the air lock entrance to the reactor building. At the opposite end of the corridor is a decontamination chamber. The decontamination chamber is connected to the reactor support building by another air lock. All processing, handling and storage within the hot cell is done on either side of the monorail corridor. Shield doors isolate the monorail corridor from the cells. Turntable switches connect the monorail with these cells.

Specific tasks to be performed in the hot cell are:

- Blanket disposal
- Solid waste packaging
- Holdup treatment of nontritiated liquid and gaseous wastes
- Remote maintenance of activated components
- Decontamination of non-activiated components for out-of-cell handling
- Atmospheric tritium recovery
- Storage of activated components

The blanket disposal area consists of a blanket cooldown area, disassembly area, cutting area, baking area and compacting and packaging area. Prior to any processing or maintenance, blanket segments are connected to a closed loop, forced convection, water cooling system. The blanket segments are cooled for 30 days until the afterheat can be readily handled by the hot cell HVAC system. Up to six blankets can be cooled at one time. After cooling, spent blankets are disassembled and cut up to reduce the size of pieces for handling. Tritium is driven out of the cut up blanket segments in a baking operation. Off gas from the bake-out oven is routed to the tritium processing system. The baked blanket segments are compacted and packaged for storage and disposal. Other solid waste consisting of filters, process containers and used parts are handled in a similar manner.

Holdup treatment of nontritiated liquid and gaseous wastes consists of chemical treatment, including ion exchange and physical treatment. The physical treatment may include absorption, adsorbtion, filtration, evaporation, drying, incineration, compaction, solidification, and encapsulation.

Maintenance and repair of activated components takes place in the hot cell remote maintenance and repair shop. All maintenance and repair work is done using servo-manipulators, overhead bridge cranes and bridge mounted electro-mechanical (EM) manipulators. Typical maintenance operations include reactor shield door seal renewal, reactor shield door latch repair, rf duct repair, limiter replacement, blanket repair, fuel system repair, vacuum pump isolation valve repair, support system module and subcomponent repair, and maintenance equipment repair. Once repaired, testing and check-out of the refurbished components takes place. Some repair work on nonactivated components may be carried out in the hot cell. A case-by-case evaluation will be necessary to determine if decontamination is more expedient than remote maintenance.

Decontamination of non-activated components takes place in the decontamination chamber. The decontamination consists of washdown, monitoring and bagging or packaging. From the decontamination chamber the components can enter the reactor service area through an air lock.

Activated components that have been repaired are stored in the hot cell facility. These components might include fuel injectors, vacuum pump isolation valves, shield door latches and support system module subcomponents.

All remote equipment for the hot cell is controlled from the hot cell control room. Included in the control room are CCTV viewing, audio, manipulator masters, control consoles and central processing units (CPUs).

19.3.3.3 Reactor Service Area

The reactor service area, located in the turbine and support building, provides hands-on repair and testing of decontaminated, non-activiated, components. Included in the reactor service area is a maintenance shop, a contact machine shop, equipment test and check out facility and storage areas for repaired and new equipment.

19.3.3.4 Reactor Building Maintenance Equipment Control Area

The control area for the reactor building maintenance equipment is located in the main reactor control room in the administration building. All maintenance equipment, including the overhead cranes, electro-mechanical manipulators, servo-manipulators, monorail mounted maintenance machines, audio and viewing equipment are controlled from this one area. Overall maintenance coordination and equipment flow between the hot cell and the air locks is also controlled from the reactor building maintenance control area.

Each piece of remote maintenance equipment will have its own control station. A typical control station will have CCTV viewing from machine mounted cameras as well as cameras providing overall viewing, audio monitoring, masters, equipment control panels, and a CPU. A supervisory control station, with a master CPU, will coordinate all maintenance activities, including programming, scheduling, monitoring and checkout. The supervisory control station also provides the interface with the hot cell control area.

19.3.4 Maintenance Equipment

The major equipment required for maintenance operations in the reactor building and hot cell have been defined conceptually to provide a basis for determining the replacement times and costs.

19.3.4.1 Reactor Building Equipment

The following major equipment items are normally located in the reactor building:

600-Tonne Reactor Building Bridge Crane
60-Tonne Reactor Building Bridge Crane
Reactor Overhead Electro-Mechanical (EM) Manipulator (227 Kg capacity)
Process Module Overhead EM Manipulator (227 Kg capacity)
Coolant Line Handling Machine (CLHM)
rf Duct Handling Machine (RDHM)
Anti-Torque Panel Handling Machine (APHM)
Shield Door Handling Machine (SDHM)
Blanket Sector Handling Machine (BSHM)
Isolation Valve Handling Unit (IVHU)
First Wall Coating Machine (FWCM)
Universal Remote Maintenance Vehicle (URMV)
Mobile Servo-Manipulator Vehicle
Steam Generator Tube Inspection Equipment
Steam Generator Tube Leak Detector
Steam Generator Tube-Plugging Equipment
Airlock Door Seal Replacement Equipment
Remote Viewing Equipment
Crane Bay Maintenance Equipment

As further design development occurs, efforts will be made to utilize the same machine for more than one purpose. For example the SDHM, APHM and BSHM may possibly be combined and the URMV may be able to provide the functions of the IVHU.

600-Tonne Reactor Building Crane -- As shown in Fig. 19-6, a 600-Tonne capacity bridge crane is mounted above all other equipment in the reactor building. This crane is primarily provided to service the reactor. In addition, it can be used to assist in the recovery of other rail-mounted or monorail-mounted maintenance machines in the event of a failure. Provisions for recovery of the crane itself are provided such that no plant maintenenace equipment failures can be fatal to the total remote maintenance concept.

Capacity of the main crane is based on the weight of the largest reactor components which are the TF coils.

The crane and a bridge-mounted electro-mechanical manipulator are normally parked in the crane bay maintenance area at the end of the reactor building which is opposite of the reactor end. These machines are retrievable to the crane bay by means of tethered cables and winches mounted at the end of the rail in the maintenance area. Provisions for all anticipated crane maintenance work is provided for in the crane bay. A minimum amount of maintenance is expected since crane use is minimal during the life of the plant. Audio and visual indication of crane bridge, trolley, and hoist movement will be provided.

Reactor Overhead Electro-Mechanical (EM) Manipulator -- Mounted in the same area as the 600-Tonne main crane is a 227-Kg capacity electro-mechanical bridge-mounted manipulator system. This EM services the top area of the reactor including upper vacuum pumps and isolation valves. It can be moved to the crane bay by the 600-Tonne crane. CCTV, lighting, and microphones are mounted on the EM to enable the operator to closely monitor manipulator operations. CCTV and lighting scan features are controlled from the equipment control room. The CCTV camera has a zoom feature. A vertical boom is extended below the trolley to bring the rate-controlled EM, cameras, lighting, and microphones close to the working area.

60-Tonne Reactor Building Bridge Crane -- A 60-Tonne capacity overhead bridge crane is provided for maintenance of the process modules in the reactor building. This crane covers the entire area on the side of the primary shield wall which is opposite of the reactor. The primary function of the 60-Tonne crane is to lift process modules or sub-assemblies from process modules. A failure recovery system is provided which is similar to that supplied for the 600-Tonne crane. The 600-Tonne crane can retrieve the 60-Tonne crane and transport it to the crane bay for repair work. Lighting and audio equipment similar to that provided for the 600-Tonne crane is mounted on the 60-Tonne crane.

Support System Module Electro-Mechanical Manipulator -- Mounted on the same rail as the 60-Tonne crane is a second 227-Kg capacity bridge-mounted EM system. The Support System Module EM is similar to the Reactor EM and has similar monitoring features. The EM is programmed and tooled to assist in the change out of process modules and subcomponent assemblies. Like the 60-Tonne crane, the Support System Module EM can be repaired in the crane bay or transferred to the hot cell.

Coolant Line Handling Machine (CLHM) -- Mounted on the reactor building monorail, the CLHM functions to disconnect, remove, transport, and store reactor coolant lines in preparation for shield door removal. After coolant lines have been drained and purged, the CLHM disconnects coolant line fittings using a standardized latching device. Prior to disconnecting coolant lines, the CLHM monorail locks are actuated to ensure a stable work platform. As lines are disconnected, a vehicle-mounted particulate monitor surveys the coupling area to determine if contamination is present. Coolant lines are transported to the hot cell for maintenance, repair, and inspection. New or refurbished units are used during reinstallation. CCTV, lighting, audio, and radiation monitoring are provided on this machine. The Universal Remote Manipulator Vehicle (URMV) can also be used to assist these operations.

RF Duct Handling Machine (RDHM) -- Mounted on the reactor building monorail, the RDHM is designed to remove the rf duct elbows prior to shield door removal. This machine engages, disconnects, removes, transports,and stores rf ducts in the same manner as the CLHM removes coolant lines. CCTV, lighting, audio, and radiation monitoring equipment is also mounted on this machine. RF ducts are transported to the hot cell for any inspection, maintenance, or repair. Replacement of rf windows will be performed by hot cell equipment.

Anti-Torque Panel Handling Machine (APHM) -- The APHM is a monorail mounted machine designed to remove the anti-torque panel prior to removing a shield door. The APHM is positioned directly in front of the panel to be removed and its upper carriage is elevated, rotated, and extended to engage the panel as shown in Fig. 19-10. A mechanized device unit disengages the

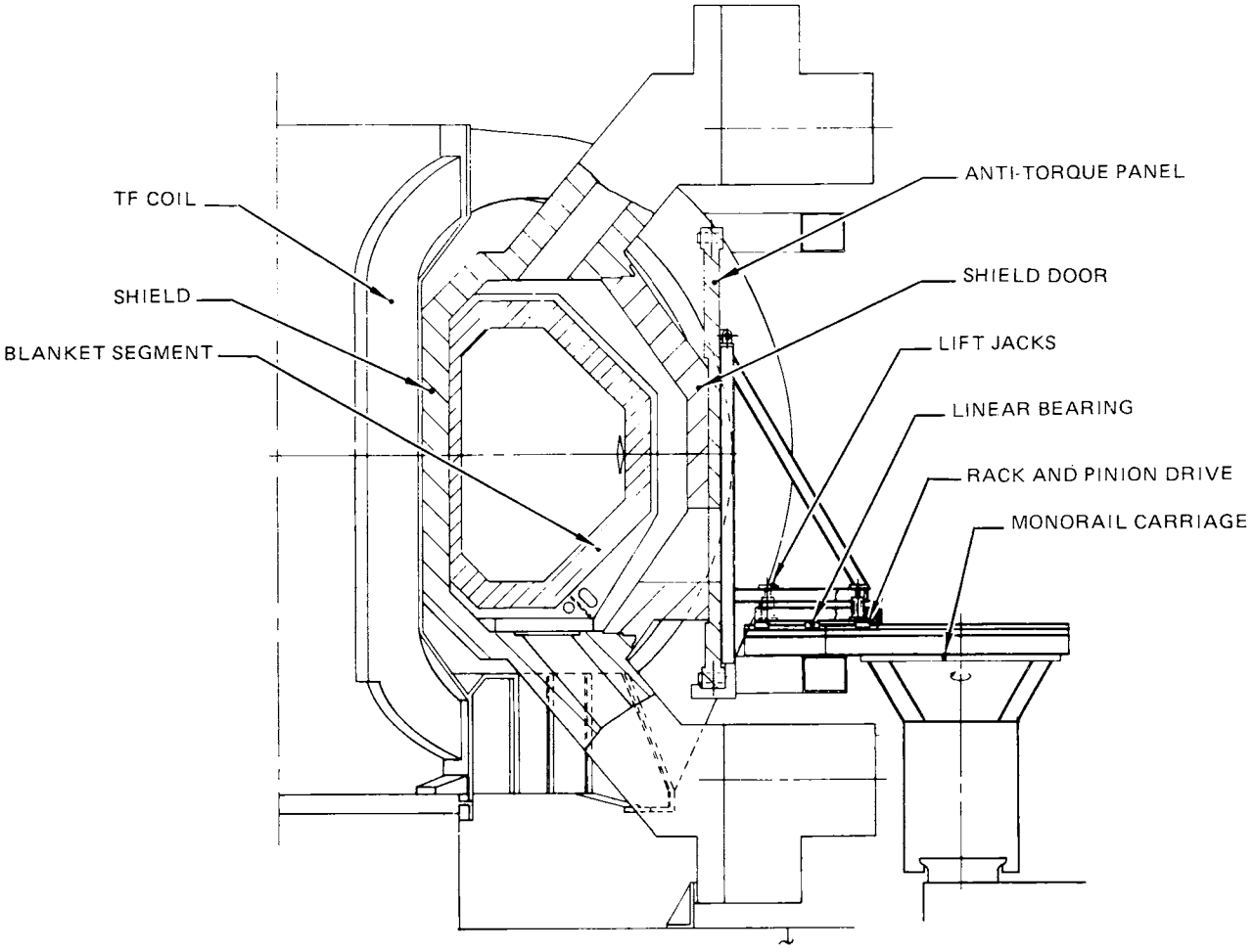

13–4106

Figure 19-10. Anti-torque panel handling machine.

latch pins and the panel is then retrieved a short distance toward the monorail until it clears the TF coil mating surfaces. The panel is then lowered a short distance and the top rotated away from the reactor until it clears the upper EF coil. At this point, the panel can be raised to clear the lower EF coil and fully withdrawn from the reactor. The carriage is then rotated and lowered and the anti-torque panel is transported to its storage location. CCTV, lighting, audio, position limit switches, and load readout transmitters are a part of the APHM. URMV assistance is provided as necesary to assist and monitor removal operations.

Shield Door Handling Machine (SDHM) -- The SDHM is a monorail-mounted machine designed to remove a shield door prior to blanket segment removal. The 156-tonne shield door is the heaviest component to be removed from the reactor during scheduled maintenance of the blanket. The SDHM is positioned directly in front of the shield door to be removed and is elevated, rotated, and extended until it mates with the shield door. Support pins engage the shield door and lift jacks are actuated until the shield door weight is carried by the SDHM. At this point, the shield door is unlatched and disengaged from its support frame. (See Fig. 19-11)

The shield door is pulled away from the reactor on a roller assembly until its weight is centered over the monorail. The carriage support track is then retracted and the entire assembly rotated and lowered for transport to the hot cell as shown in Figure 19-11. An isometric drawing of the retraction mechanism is shown in Fig. 19-12.

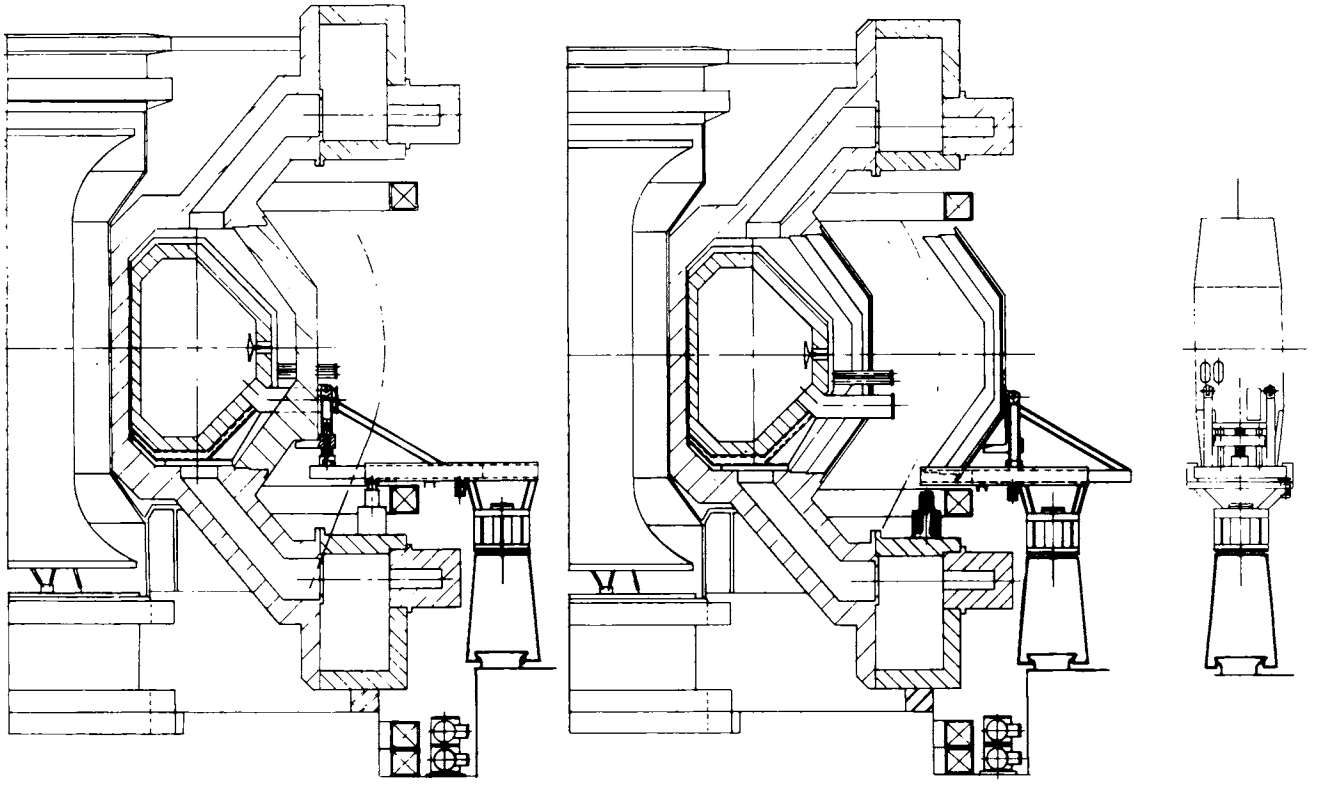

13-3996

Figure 19-11. Shield door removal.

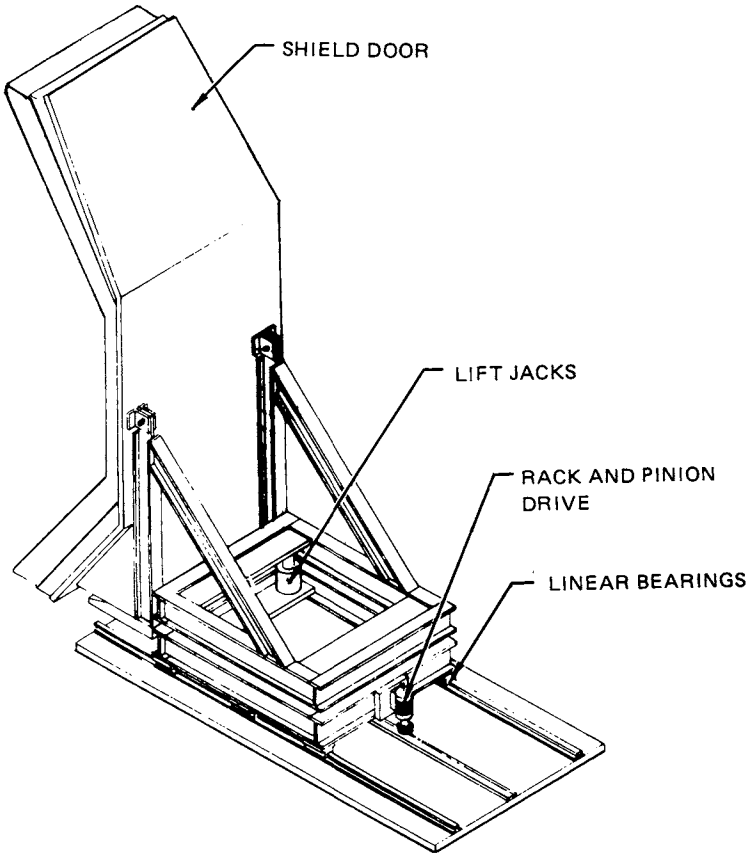

Figure 19-12. Shield door removal mechanism.

Maintenance of the door seals and latch assembly is performed in the hot cell. This can be accomplished with the shield door on the SDHM or in a storage area. CCTV, lighting, audio, position limit switches, and load readout transmitters provide visual and audio feedback to the control room operator and programmed CPU control system. URMV assistance is provided as necessary to support and monitor shield door removal operations.

Blanket Sector Handling Machine (BSHM) -- The BSHM is a monorail-mounted machine designed to remove and replace the 60-Tonne blanket segments. This machine is positioned in front of a blanket segment after the shield door has been removed. The BSHM is locked to the monorail during all removal operations to ensure a stable work platform. A bearing plate is inserted beneath the blanket segment to cover the vacuum duct aperture and to support the BSHM gas bearings. This plate can be inserted either by the URMV or the BSHM. A work platform is elevated, rotated, and extended until it mates with the blanket sector, and a gas bearing assembly is pushed into the space below the

blanket. When the bearing assembly is in place, the static boot presssure will be increased significantly to raise the gas bearings and pick up the weight of the blanket sector as shown in Fig. 19-13.

The BSHM engages and grapples the blanket sector and releases tie-down pins which normally hold the sector in place. The blanket sector is then pulled from the reactor by the BSHM while the entire weight is carried by the gas bearing assembly. A rack and pinion drive unit pulls the blanket sector out to the monorail centerline. At this point, the gas bearings are deflated and the carriage assembly is rotated for transport. Spent blanket segments are transported to the hot cell for interim storage and ultimate disposal.

If the blanket segment is not fully spent, and it is desired to inspect, repair, or refurbish the blanket, then cooling to the blanket must be maintained to prevent structural damage to the blanket that might be caused by overheating. In order to maintain cooling, it will be necessary to valve in flexible hose assemblies to the portion of the blanket cooling lines that extends through the shield door and through the anti-torque plate. As the shield door and anti-torque plate are removed and pass over the hose connection assembly, an alternate hose is connected and valved in to cool the blanket while the original hose is valved off and removed to allow unobstructed removal of the shield door or anti-torque plate. A valve may be installed adjacent to the blanket to facilitate this process as long as it has a welded bonnet and canopy such that any items inside the shield are of a zero-leakage design during normal operation. The URMV will be employed to perform these operations for blankets which are to be cooled until decay heat is no longer considered to be potentially damaging to the partially-spent blanket sector. A portable forced-convection cooling package is also part of the BSHM such that blanket cooling may be maintained in transit, if desired. As afterheat effects and maintenance operations become better defined, it may be possible to simply disconnect the coolant lines and remove the blanket before reconnecting the cooling lines.

Two blanket sectors can be removed through each shield door opening. The second blanket sector is located under the TF coil adjacent to the first blanket sector. In order to remove the second sector, the gas bearing assembly

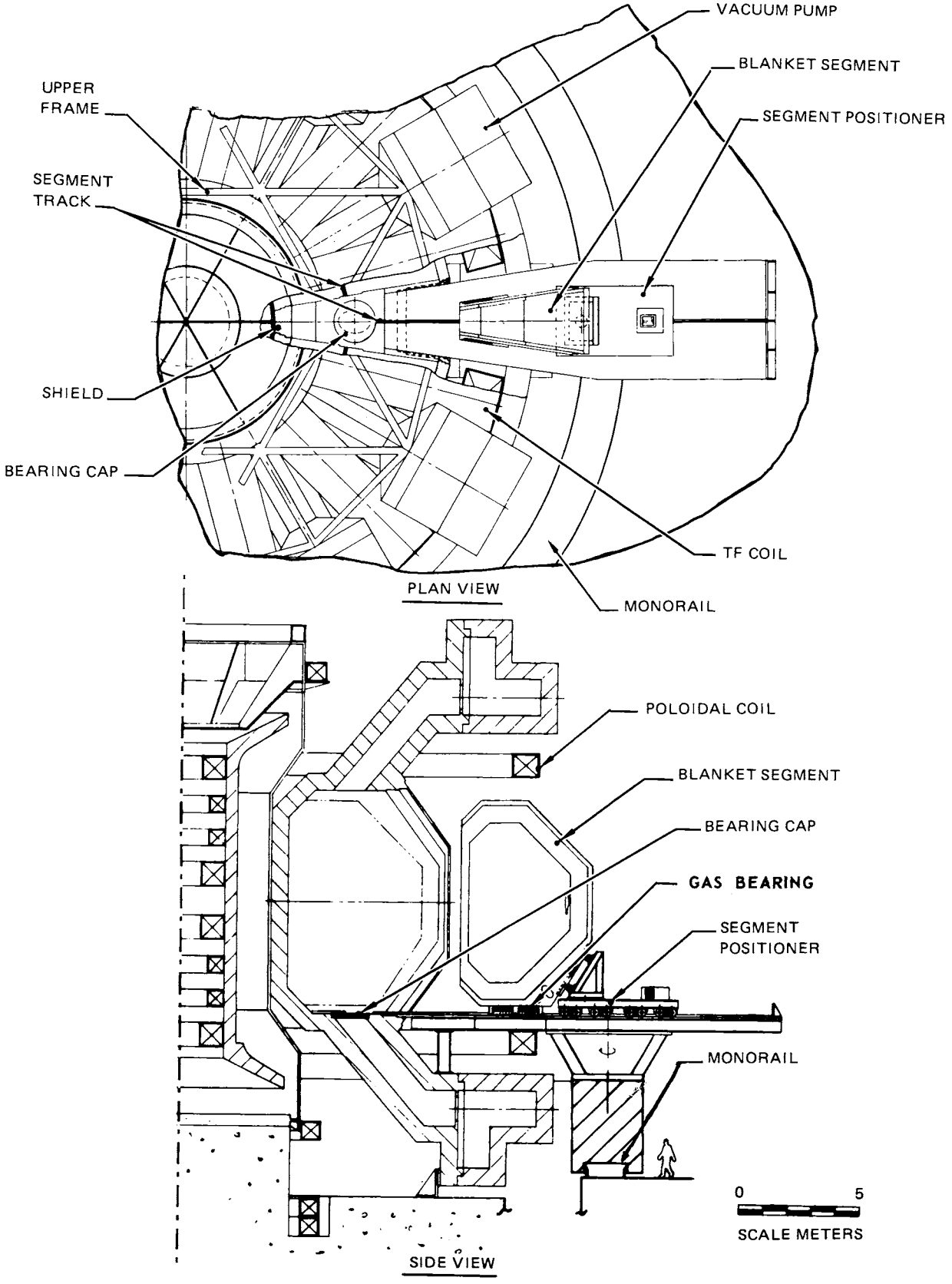

Figure 19-13. Blanket sector handling machine.

must be positioned under the segment and translated circumferentially to a position in line with the shield door. This movement is effected by the BSHM drive system. The second blanket sector is then removed as described above. Cooling may also be maintained in a similar manner.

CCTV, lighting, audio, radiation and airborne contamination monitoring, position and load readout, and air bearing controls are all provided as integral features of the BSHM. URMV assistance can be provided as necessary to support and monitor segment removal operations.

First Wall Coating Machine (FWCM) -- The first wall coating is expected to last the life of the blanket sector; however, the FWCM has been included to provide the capability for complete wall recoating or localized repairs. The FWCM is a device used to build up the first wall beryllium coating of the blanket in-situ. At least one blanket sector must be removed to allow the FWCM to be placed inside the reactor torus. Coating must be accomplished in a vacuum. A special closure is installed in the shield door opening to allow the torus to be evacuated. This vacuum closure contains integral penetrations for FWCM power, control, and gas lines. Many controls and actuators can be located outside of the vacuum closure. The URMV installs and connects the vacuum closure and FWCM.

After the beryllium coating machine is installed in the reactor torus, stabilizers are deployed to support and guide the machine as it drives around the torus while resting on the bottom. A programmed positioner and wall sensors guide the plasma spray heads in a circular path around the torus. To minimize the loss of vacuum purity, all drive equipment and positioners are electric. Based on current day coating techniques ~ 20 plasma spray heads would be required to permit application of 0.3 mm coating to the complete first wall in 24 hours (See Sec. 8.4.3.3).

CCTV, lighting, audio, contamination monitoring, position transmitters, and inspection equipment provide feedback to the control operator and CPU controls. The beryllium coating can also be applied to a single blanket sector in an evacuated chamber in the hot cell.

Isolation Valve Handling Unit (IVHU) -- Mounted on the reactor building monorail, the IVHU services upper and lower vacuum pumps and isolation valves. Normally the pump and valve are removed as a unit and moved to the hot cell for refurbishment; however, because of the limited isolation valve life, a special plug is provided in the shielding to permit replacement of the valve seals without disturbing the rest of the vacuum system.

Normally,the IVHU first removes the shield cover from the vacuum pump and duct and then disengages the vacuum pump and valve assembly. Feed-through cryogenic and valve actuator controls are disconnected through a rack and panel connection as the pump is removed. A replacement pump and valve is reinstalled and the shield cover is replaced. The IVHU can also remove the local shield plug and valve stem using similar operations.

The removed assemblies are transported to the hot cell for refurbishment or disposal. CCTV, lighting, audio, maintenance tools and attachment fittings, positioners, and load readout transmitters are an integral part of the IVHU.

Universal Remote Maintenance Vehicle (URMV) -- The URMV, shown in Fig. 19-14, is a versatile monorail-mounted machine which serves both to perform reactor and process equipment maintenance tasks as well as to perform work assistance and monitoring functions in support of other maintenance equipment operations. Typical reactor operations of the URMV are shown in Fig. 19-15. A key feature of the URMV is an assembly consisting of two bilateral, force-reflecting servo-manipulator slave units with attendant monitoring equipment and a 227-Kg capacity hoist. Stereo TV cameras, lighting, audio, radiation monitoring, and vacuum equipment are included on the end of a telescoping, articulating boom.

The support boom is capable of translating vertically on a telescoping mast assembly. A high-capacity telescoping hoist boom is also mounted on top of the main mast structure and is designed to rotate 360°. Monorail locks ensure a stable working platform.

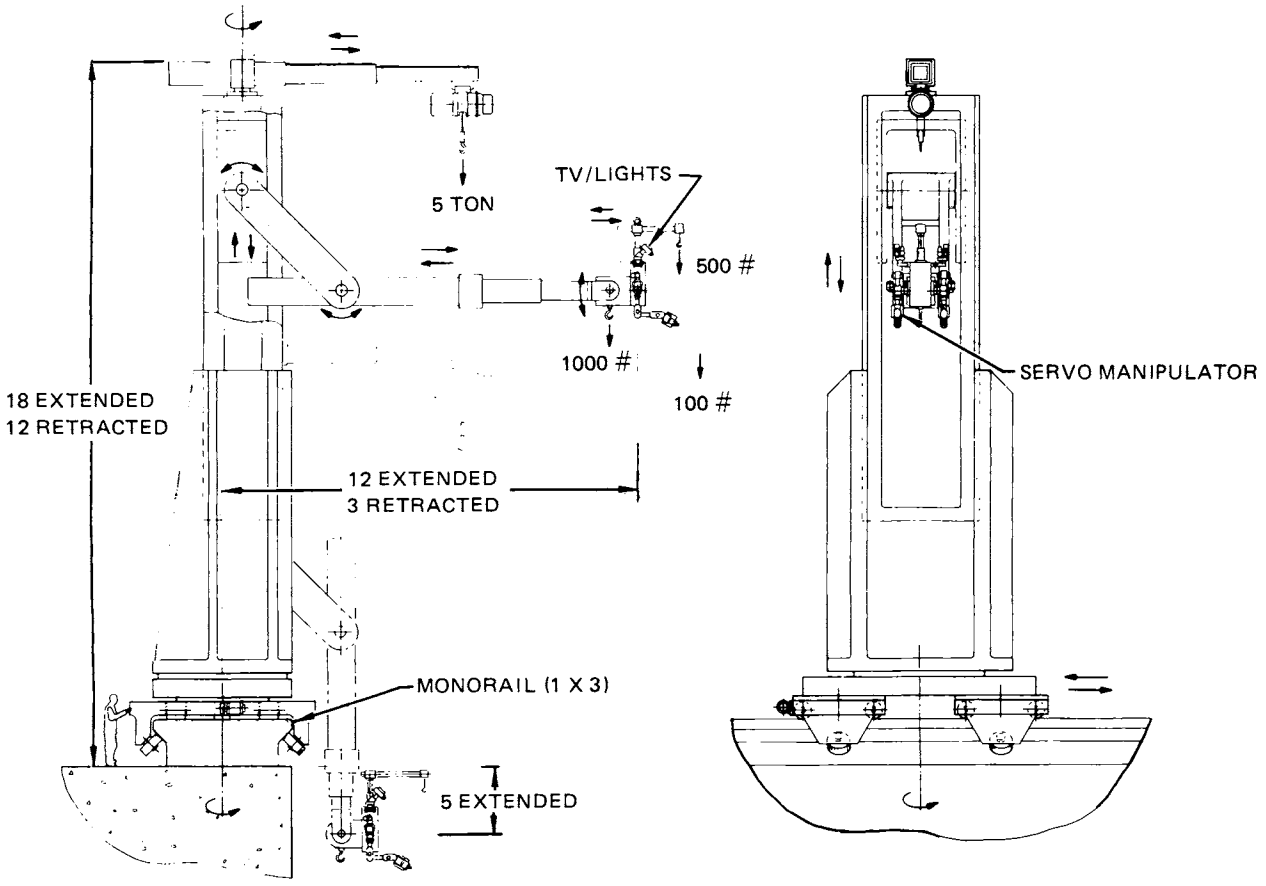

Figure 19-14. Universal remote maintenance vehicle.

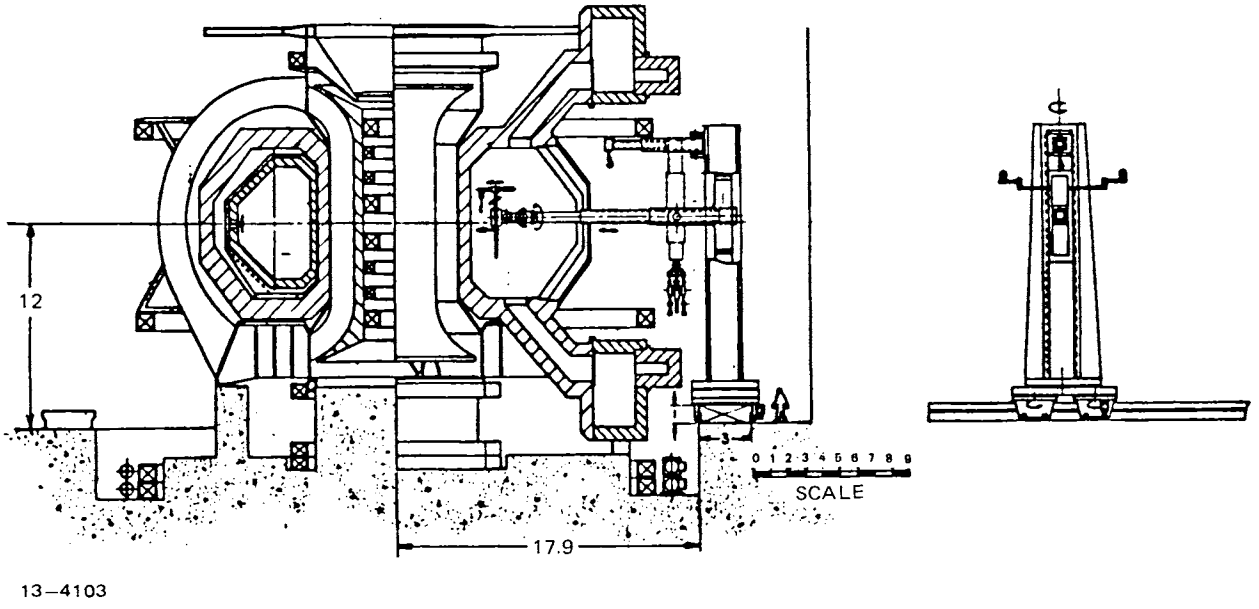

Figure 19-15. URMV remote operations.

This machine is well equipped to assist all reactor maintenance operations and to perform monitorng and surveillance functions. The URMV is also the primary maintenance vehicle for process module component replacement. Use of universal piping and electrical disconnect fittings on the process modules enhances the use of the URMV. Retrieval and repair of other maintenance vehicles can be achieved by the URMV. Frequent operation of this machine requires that it be designed to be very reliable. Controls for this machine should be centrally located such that it can be used to support all reactor building monorail operations.

Mobile Manipulator Vehicle (MMV) -- As shown in Fig. 19-16, the MMV is a tracked vehicle which has the capability to perform plant maintenance and surveillance primarily in the reactor building basement.

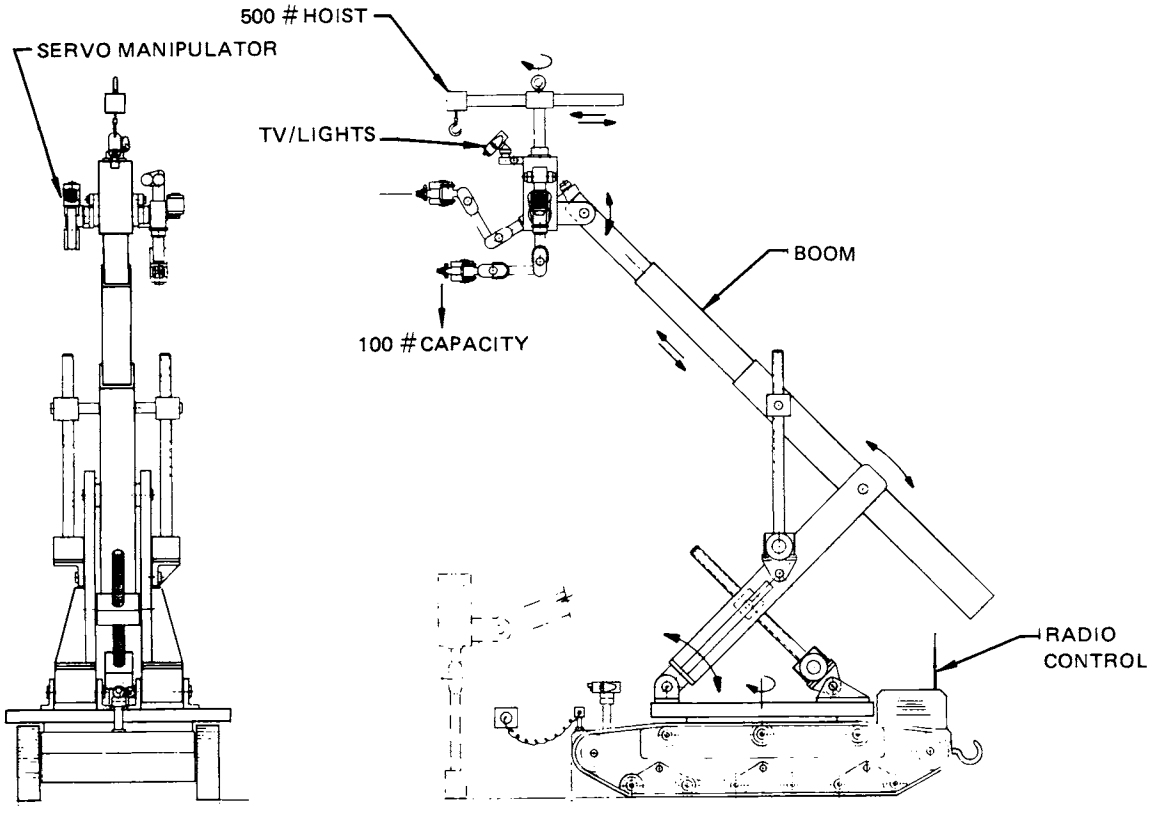

Figure 19-16. Mobile manipulator system.

A universal servo-manipulator and hoist assembly is mounted such that it can travel up and down a rotating mast. Stereo TV, lighting, radiation monitoring, audio, and various inspection, testing, and diagnostic monitoring equipment is mounted on the MMV. A large compliment of tools and attachments can also be carried by the MMV. A portable battery power supply can be recharged by driving the MMV onto charging platforms located throughout the basement. Multiplexed radio control and feedback information is provided to interface with the control room operator or a local control station in the basement. A hatch is provided such that the MMV can be removed from the basement by the 60-Tonne reactor building crane. A backup unit is provided for MMV retrieval.

Steam Generator Tube Inspection Equipment -- Routine inspection of steam generator tubing ensures that a high integrity contamination barrier is maintained in the event of tritium contamination of the primary coolant system. An inventory of activated corrosion products (crud) will also build up in the primary piping. The once through steam generator (OTGS) design is very amenable to tube inspection from the top water box. Draining the tubes is not required. A tube sheet divider plate does not block the tube sheet area such that an inspection or tube plugging machine is easily installed and programmed to inspect all tubes. This approach has been extensively demonstrated in present day Babcock and Wilcox plants.

After partially draining the steam generator, the upper water box manway cover can be unbolted by the overhead process module EM and removed by the 60-Tonne crane. An indexing machine is then placed inside the steam generator water box. A power and control cable is routed to a work package which has been mounted near the top of the OTSG. The work package includes a drive system which drives and retracts an ultrasonic or eddy current probe through each tube. Other package equipment includes electronics which control probe indexing and drive mechanisms, data comparison with baseline data, and data transfer to the main control area.

The steam generator inspection equipment is normally stored in the support building service area where it is calibrated and given an operational checkout prior to actual tube inspection work. Tube inspection operations

can also be assisted and monitored by the URMV. Equipment is transported to and from the reactor building by the URMV.

Steam Generator Tube Leak Detector -- Present methods of tube leak location generally involve visual examination of the lower tubesheet area and comparison with tube inspection data. Tube-to-tube sheet leaks cannot be located by volumetric inspection methods such as eddy current inspection or ultrasonic examination. Many leaks are only manifested at operating pressure and temperature. A hair line crack may only produce a leak when the tube side is pressurized.

Leak detection equipment may include visual inspection and moisture detection equipment which is used in the lower water box area. Visual equipment will include lighting, TV, and microscope equipment. This equipment may be mounted on a support structure and be placed inside the lower manway by the URMV.

It may also be necessary to physically plug both ends of suspected leaking tubes with an expandable plug and perform a pressure drop test of the individual tube. Leaks generally develop in the tube sheet and tube support areas. Also, certain tube support areas of the OTSG are much more likely to precipitate tube thinning leakage based on statistical data.

Steam generator tube leakage detection and leak location equipment will be better defined at some future date as this area becomes more developed. The URMV will be the primary tool which interfaces with leakage detection equipment. Equipment features and deployment will likely be similar to tube inspection equipment.

Steam Generator Tube Plugging Equipment -- Leaking or potentially-leaking steam generator tubes are identified by the tube inspection and leak detection equipment described above. These tubes must either be plugged or repaired.

Tube plugging may be performed in several ways and this technology is well developed. Tubes to be plugged would be located and marked by the tube leak detection equipment. Tube plugs would be driven into these tube ends by impact, explosive force, a hydraulic device, or some other acceptable means.

With camera, lighting, and audio equipment in place for tube leakage detection, URMV manipulators could easily place tube plugs into marked tube ends.

Tube repair technology has been developed in recent years in an effort to salvage damaged tubes and minimize tube wastage. An example of tube repair involves the insertion of a sleeve inside the tube at the location of wall damage or tube thinning. The repair sleeve is expanded by a hydraulic expansion mechanism which uses water as a working fluid. This equipment could be deployed during tube inspection and could be part of the tube inspection equipment.

Airlock Door Seal Replacement -- Airlock door seals may be removed and replaced from the hot cell side of the airlock door. The frame which supports the door seal assembly can be removed by the URMV. A new seal assembly can be installed and the support frame reinstalled. As an alternate, the entire removed support frame and seal assembly could be transported to the hot cell for maintenance and refurbishment. The URMV will perform all removal and transport functions.

Remote Viewing Equipment -- High-resolution CCTV remote viewing is provided in the reactor building. General area viewing, scanning, and zoom cameras are features at fixed installations in the building. General lighting and spotlighting is available to support viewing equipment. In addition, all mobile maintenance machines have viewing CCTV equipment with close range zoom features as well as microscope close viewing attachments for close surveillance of maintenance activities for visual inspection work.

Black and white general area viewing is provided. Color TV viewing is provided for close-up inspection work when color definition is important. Audio sensory and sound system equipment will be integrated with video displays in the control area.

Lighting will be designed to maximize reliability. All lights will be easily replaceable. Spotlighting will be normally deenergized. Long-life bulbs will be used throughout the building and on maintenance equipment. Maintenance equipment lights will be renewed prior to a major outage if recommended by the manufacturer. Wall coatings will be selected to maximize light reflection.

Crane Bay Maintenance Equipment -- The crane maintenance bay is designed to service, repair, inspect and refurbish the two overhead bridge cranes and the two bridge-mounted EM manipulators. A description of the crane maintenance bay is provided in Sec. 19.3.3.1. Remote and semi-remote maintenance can be performed in the bay area using master-slave servo-manipulators, area hoists, and tools which are permanently located in the area. Access is provided for hands-on contact maintenance. Personnel would be required to wear fully self-contained suits while working in the maintenance bay.

Coil Winding Equipment -- A coil winding area can be included as part of the crane maintenance bay for the repair, inspection, and refurbishment of reactor magnets. Specific requirements or features of this area have not yet been defined.

Other Reactor Building Equipment -- With better definition of reactor system and auxiliary system equipment, additional dedicated maintenance equipment and tooling will be identified. As an example, equipment will be required to periodically change lubricating oil in the primary coolant pump motors, mechanical seals may require periodic replacement, oil filter cartridges may require replacement, etc. However, it is not appropriate to identify equipment until the design matures to the point that replaceable cartridge-type filters, a backflushable filter system or a magnetic filter system has been identified.

19.3.4.2 Hot Cell Equipment -- The major maintenance equipment items located in the hot cell are:

- 100-Tonne Blanket Processing, Solid Waste Processing and Canister Storage Bridge Crane
- 250-Tonne Door and Repair Shop Bridge Crane
- 60-Tonne Decontamination Facility Bridge Crane
- Solid Waste Processing and Storage Overhead Electro-Mechanical (EM) Manipulator (227 Kg capacity)
- Door and Repair Shop Overhead EM Manipulator (182 Kg capacity)
- Remote Repair Shop Equipment
- Corridor Monorail

- Remote Lighting and Viewing Equipment
- 300 Tonne Turntables
- Decontamination Facility Overhead EM Manipulator (182 Kg Capaicty)
- Decontamination Equipment
- Storage Canisters and Racks

100-Tonne Blanket Processing and Solid Waste Processing and Canister Storage Bridge Crane -- A 100-Tonne capacity bridge crane services the blanket cool down area, solid waste processing area and the dry and wet storage area of the hot cell. The crane is sized to handle the reactor blanket segments. A contact maintenance area for the 100-Tonne crane is provided at the end of the rail. Tethered cables and winches provide failure recovery. Audio and visual indication of the crane bridge, trolley and hoist movement will be provided.

Blanket Processing, Solid Waste Processing and Canister Storage Overhead EM Manipulator -- Mounted on the same rail as the 100-Tonne bridge crane is a 227-Kg bridge mounted EM manipulator. This manipulator assists in spent blanket hookup to the blanket cooldown area as well as servicing the cutting equipment, baking oven, compactor and packaging equipment. A contact maintenance area is provided at the opposite end of the rail for the 100-Tonne crane maintenance area. The 100-Tonne crane can push the EM manipulator to the maintenance area. CCTV, lighting and microphones are mounted on the EM for operator monitoring of the manipulator operations.

60-Tonne Decontamination Facility Bridge Crane -- A 60-Tonne capacity bridge crane is provided to service the liquid waste and tritium processing and storage areas. This includes the receiving area, the process areas, and the drumming and storage areas. The crane is sized to handle standard rad waste containers. In addition to serving the liquid processing area, the crane can provide auxiliary service to the remote maintenance repair shop. A contact maintenance area is located at the end of the rail with a cable-winch tether system for failure recovery. Audio and visual indication is provided as with the other cranes.

250-Tonne Door and Repair Shop Bridge Crane -- Traveling on the same rail as the 60-Tonne bridge crane is a 250-Tonne capacity bridge crane. This crane provides service to the remote maintenance and repair shop and the liquid waste processing area. It can work independently or in conjunction with the 60-Tonne bridge crane. The 250-Tonne crane provides failure recovery for the 60-Ton crane. Maintenance on the 250-Tonne crane takes place in the same maintenance area used by the 60-Tonne crane. Audio and visual monitoring of the crane is provided.

227-Kg Remote Repair Shop Overhead EM Manipulator -- A 227-Kg capacity EM manipulator is mounted on separate rails below the 250-Tonne and 60-Tonne cranes. This manipulator assists in the remote maintenance and repair of reactor components and support system modules and subcomponents.

The EM manipulator can also service the tritium and the liquid processing areas. Failure recovery is accomplished by pushing the EM to the maintenance area with the 60-Tonne crane. Mounted on the EM manipulator are CCTV, lighting and microphones to monitor the EM as well as provide additional viewing and audio for remote maintenance and repair work.

Remote Maintenance and Repair Shop -- Maintenance and repair work on activated reactor components, support system modules, support system subcomponents and maintenance equipment takes place in the remote maintenance and repair shop. To reduce the amount of specialized equipment needed, repair work is limited to simple tasks. Universal remote maintenance equipment, such as servo-manipulators, are used extensively to perform most tasks. Special tools will be used to adapt the universal equipment to specific tasks. Supplementing the servo-manipulators are the two overhead cranes and the EM.

Separate work areas equipped to perform similar repair tasks such as valve repair, are used. Each work area has a pair of servo-manipulators, work stands, tool crib, viewing and audio equipment, and testing equipment.

Large reactor components and support system modules are serviced without removing them from their monorail transporters. Portable servo-manipulators, which hang from an overhead bridge, are used to service these components.

Typical operations performed in this manner are shield door seal and latch replacement and limiter replacement.

Most maintenance and repair work on the monorail mounted maintenance vehicles is carried out in the remote maintenance and repair shop. This work is accomplished while the vehicle is on the monorail track using the portable servo-manipulators.

Remote inspection and testing of components after refurbishment is provided in the remote maintenance and repair shop. This includes nondestructive weld testing (such as ultrasonic or liquid penetrant), leak testing, functional testing of motors, actuators, pumps, and calibration of sensors.

Remote viewing for the remote maintenance and repair shop is provided by CCTV. Wall-mounted cameras give overall viewing. Cameras mounted at the work stations and on equipment provide detail viewing. Portable cameras, mounted on tripods, supplement the wall mounted cameras to provide additional viewing. Lighting is enhanced by a reflective coating on the cell liner.

Corridor -- A central corridor, containing the monorail, provides access to the various areas in the hot cell. Transfer from the central corridor to the hot cell areas is via turntable switches. The turntable switches are electric motor driven. A redundant manual override is provided.

Decontamination Chamber -- The decontamination chamber is located at the end of the central corridor. All equipment must pass through the decontamination chamber before entering the reactor service area air lock. The decontamination chamber contains equipment for chemical or electrochemical decontamination, washdown, monitoring and packaging. A turntable, used to rotate components, provides access for the decontamination spray. A sliding door isolates the decontamination chamber from the rest of the hot cell.

Reactor Service Area Equipment -- All contact maintenance of nonactivated decontaminated reactor components and support system module subcomponents takes place in the reactor service area.

An air lock connects the hot cell to the reactor service area. A 250-Tonne capacity bridge crane provides equipment transfer to and from the air lock. This crane is sized to lift the door out of the air lock. A

contact maintenance area is provided for the crane in the reactor service area. A contact maintenance area is also provided for the 250-Tonne crane.

The reactor service area contains a machine shop, component test equipment and storage for new and rebuilt components. The machine shop contains the typical equipment including lathes, drill presses, milling machines, grinders, saws, and welding booths. Testing equipment includes weld inspecting equipment, functional bench test equipment for pump motors, and actuators, leak detection equipment, and calibration equipment. All components are tested before entering the hot cell.

19.3.5 Availability Assessment

Availability of the reactor depends on the time required to replace components and the frequency with which replacement is required (failure rate). Lack of sufficient failure rate data for the reactor components has led us to first assess how much time is required for component replacement, then to work backwards by determining the amount of permissible down time (Table 19-4) for each subsystem, and finally to determine what failure rate goals must be met by each of the reactor subsystems. Further breakdown of these failure rate goals is then required by subsystem designers to determine what redundancy or design margins should be included in the designs. Failure rates and replacement times have been assessed for the reference design; however, in-depth tradeoffs and evaluation were not possible within the scope of this study. Further study and development is required to assure a proper balance between the failure rates and design requirements of the reactor subsystems.

19.3.5.1 Scheduled Maintenance

The first step taken in the assessment was to determine how long it would take to replace reactor components that must be replaced on a scheduled basis. Time lines were prepared for blanket sector and vacuum pump molecular sieve and isolation valve seal replacement. These are the major on-reactor scheduled (preventive) maintenance items identified to date. All operations assume 24 h, 7 day a week maintenance activities with an 80% productivity factor. Eighty percent productivity is assumed because highly automated machines are being used.

Blanket Replacement -- Four blanket sectors are replaced annually for preventive maintenance. Two adjacent sectors are replaced at each of two locations between TF coils. Special purpose manipulators are provided for the necessary operations (Sec.19.3.3). The resulting time for a scheduled replacement is approximately 10 days which indicates that the blanket sectors can be replaced sequentially within the allowable downtime for annual maintenance with a single set of maintenance equipment. Approximately 12 days are required if beryllium recoating is necessary.

During an unscheduled blanket replacement, the same procedure that is used for scheduled maintenance will be followed except an additional day will be required for shutdown and startup. Because of the builtin leak detection capability it is believed that small leaks, the most likely fault, can be located prior to reactor shutdown. Vacuum chamber cleanup is accomplished in approximately 1.5 days in parallel with other maintenance operations. As a result, unscheduled outages are assumed to require approximately 11 days of downtime for replacement of the sector under the TF coil when startup and shutdown are included. Beryllium recoating is not anticipated.

The time allocations for scheduled replacement of two blanket sectors are summarized in Table 19-9 and presented in more detail in Table 19-10. During reactor shutdown it is assumed the blanket will be brought down to near room temperature before it is removed. Four sets of cooling lines must be removed, two for each blanket sector. Prior to disconnecting coolant lines, the coolant is drained to minimize spillage during maintenance. If sector repair is planned, active cooling is required at all times during cooling line removal to prevent decay heat from damaging the blanket. Because the coolant lines are entrapped by the anti-torque panel and shield door, several extra steps are required to permit extricating these components from the coolant lines. These extra steps are not included in the table because they are not used for scheduled maintenance when end-of-life parts are removed.

An evaluation of the blanket sector temperature response has been performed to determine how much tritium is released when all external cooling is removed and a temperature increase occurs as a result of decay heat. The analysis was performed for the Zr_5Pb_3 multiplier at 12 hours after plasma shutdown at which time $\sim$ 2 MW of afterheat is being produced in each blanket sector.

Table 19-9. Summary of First Wall/Blanket Sector Replacement Time

LEVEL 1 TASK	LEVEL 2 TASK SUMMARY	DURATION HRS:MIN	DURATION HRS:MIN
Shutdown			12:25*
Access	Remove Coolant Lines	27:40	
	Remove rf Duct	9:05	
	Remove Anti-torque Panel	15:25	
	Remove Shield Door	19:20	
			71:30
Removal	Remove Blanket Sector A	13:10	
	Remove Blanket Sector B	14:25	
			27:35
Coating	(Optional)	48:00	
Replacement	Replace Blanket Sector B	16:50	
(Full Torus)	Replace Blanket Sector A	14:50	
			31:40
Assembly	Replace Shield Door	29:30	
	Replace Anti-torque Panel	17:55	
	Replace rf Duct	17:20	
	Replace Coolant Lines	37:30	
			102:15
Startup			12:25*
		TOTAL	233 *
	Replacement Time		
	Scheduled	9.7 days*	
	Unscheduled	10.7 days	

*Startup and shutdown time not included in scheduled maintenance.

Table 19-10. First Wall/Blanket Sector Replacement Sequence and Time Estimates

LEVEL 1 TASK	LEVEL 2 TASK SUMMARY	DURATION HRS:MIN
Shutdown	Rampdown rf heating/current drive	:25
	Discharge TF, CF, OH and EF magnets	12:00*
	Drain blanket coolant	12:00
	Pressurize plasma chamber	2:00*
	Warmup cryopumps	6:00*
Access	Pass CLHM through airlock	3:00
	Position CLHM (Coolant Line Handling Machine)	2:00
	Valve off, drain coolant lines	1:40
	Disconnect coolant line bundle #1	2:50
	Handle and stow coolant line bundle #1 on CLHM	2:10
	Disconnect and handle coolant line bundles #2,#3, and #4	15:00
	Move CLHM out of position	1:00
	Position RDHM	2:00
	Valve off, drain rf duct coolants	1:40*
	Disconnect rf duct line and coolant bundle	3:10
	Handle and stow rf duct bundle on RDHM	2:55
	Move RDHM out of position nearby	1:00
	Position APHM (anti-torque panel handling machine)	2:00
	Attach APHM to anti-torque panel	3:30
	Transfer panel weight to APHM	:15
	Remove locking pins	3:20
	Withdraw panel from frame, move to monorail	5:20
	Withdraw APHM with panel	1:00
	Move SDHM to position (Shield Door Handling Machine)	1:45

Table 19-10. First Wall/Blanket Sector Replacement Sequence and Time Estimates (cont'd)

LEVEL 1 TASK	LEVEL 2 TASK SUMMARY	DURATION HRS:MIN
Access	Attach SDHM to shield door	3:30
	Transfer door weight to SDHM	:15
	Unlatch coolant bundle seals (5 sets)	8:30
	Unlatch door	1:30
	Withdraw shield door radially to monorail	3:00
	Withdraw SDHM with shield door	1:00
Removal	Position BSHM #1 (Blanket Sector Handling Machine)	2:00
	Insert vacuum port plate	:30
	Insert gas bearing pads and cover plates	3:00
	Attach supports to blanket sector A	2:45
	Unlock blanket sector A, above and below	2:40
	Activate gas bearings, withdraw sector to monorail	1:00
	Detach BSHM #1 with sector, move from position	1:15
	Position BSHM #2 (for sector B)	2:00
	Insert gas bearing pads and cover plates	3:15
	Remove sector A guide cover plates and stow	1:15
	Attach 1 support frame to sector B	1:00
	Unlock blanket sector B, above and below	2:40
	Activate gas bearings, move sector B peripherally	1:00
	Attach support frame #2 to sector B	1:00
	Withdraw sector B to monorail	1:00
	Detach BSHM #2 with sector, move from position	1:15
Coating	Position FWCM (First Wall Coating Machine)	2:00
	Seal shield door opening	1:00

Table 19-10. First Wall/Blanket Sector Replacement Sequence and Time Estimates (cont'd)

LEVEL 1 TASK	LEVEL 2 TASK SUMMARY	DURATION HRS:MIN
Coating	Pump down reactor to spray vacuum	12:00
	Spray surface (2 quadrants)	20:00
	Inspect surface	10:00
	Bring up to ambient pressure	1:00*
	Withdraw coating machine to monorail	1:00
	Move coating machine (FWCM) from position	1:00
Replacement	Position BSHM #2 with blanket sector B into postion	2:00
	Activate gas bearings, move sector B in radially	1:00
	Detach support frame #2 from sector B	:45
	Translate sector B peripherally into position	1:30
	Lock sector B in position, above and below, check	3:50
	Detach support frame #1 from sector B	:45
	Install sector A guide cover plates	1:30
	Remove gas bearing pads and sector B guide covers	2:45
	Withdraw BSHM #2 to monorail	:30
	Detach BSHM #2 and move from position	1:15
	Position BSHM #1 with blanket sector A into position	2:30
	Activate gas bearings, move sector A radially to core	1:30
	Lock blanket sector A in position, above and below, check	3:50
	Detach supports from blanket sector A	2:15
	Remote gas bearing pads and guide cover plates	2:30
	Remove vacuum port plate	:30
	Withdraw BSHM #1 to monorail	:30
	Detach BSHM #1 and move from position	1:15

Table 19-10. First Wall/Blanket Sector Replacement Sequence and Time Estimates (cont'd)

LEVEL 1 TASK	LEVEL 2 TASK SUMMARY	DURATION HRS:MIN
Assembly	Move SDHM with shield door into position	2:15
	Move shield door radially to position; check	1:30
	Engage shield door latches, check	12:00
	Engage coolant line bundle latches, check (5 sets)	10:00
	Transfer weight to latches, check	:30
	Release SDHM from door	1:30
	Withdraw SDHM radially to monorail	:45
	Detach SDHM, move from position	1:00
	Move APHM with anti-torque panel into position	2:15
	Move panel radially, insert into frame, check	5:50
	Insert locking pins, check	5:50
	Transfer weight to door frame, check	:45
	Detach APHM from panel	1:30
	Withdraw APHM radially to monorail	:45
	Detach APHM, move from position	1:00
	Move RDHM into position	2:00
	Pick up rf duct bundle and move to position	2:30
	Match disconnect joints, check	3:00
	Connect rf bundle joints, check	2:50
	Refill rf bundle lines, test for leaks	6:00*
	Withdraw RDHM	1:00
	Move CLHM to position	1:30
	Pick up coolant line bundle #4 and move to position	2:30
	Match disconnect joints, check	3:00
	Connect coolant line bundle #4 joints, check	2:50
	Refill coolant line bundle #4, test for leaks	6:00*
	Install and test coolant line bundles #3, #2 and #1	25:00

Table 19-10. First Wall/Blanket Sector Replacement Sequence and Time Estimates (cont'd)

LEVEL 1 TASK	LEVEL 2 TASK SUMMARY	DURATION HRS:MIN
Assembly	Install shield covers on coolant lines	8:40
	Pumpdown and test vacuum seals	4:00*
Startup	Vacuum pumpdown (remainder) and chamber cleaning	36:00*
	Charge magnets (TF, EF, CF and OH)	12:00
	Initiate plasma and ramp up power	:25
	Pressurize and heat primary coolant	12:00*
	TOTAL DOWN TIME	257:50

*Conducted in parallel with other operations. Not included in total downtime.

Results indicate the blanket surface temperature will rise ∿ 400°C above the ambient conditions until reaching equilibrium by convection cooling to the CO_2 environment. For these conditions some tritium is outgassed from the blanket. The tritium purge lines from the breeder will be capped or vented to a container to prevent its escape; however some tritium in the outer surfaces will be released. An evaluation of this tritium release has indicated that a maximum of 10 Curies and 30 Curies will be released from the beryllium surface and steel surfaces, respectively. This release is within acceptable limits and can be readily controlled by the atmosphere tritium recovery system. A further discussion of the tritium release is presented in Chap. 14.

After all coolant lines are removed the coolant line handling machine (CLHM) takes the parts to the hot cell. Change-out units are used for replacement.

The RDHM is used to replace the rf duct assembly. A standard latch drive mechanism is used to facilitate removal. Separate equipment is also used for

removing the anti-torque panel and shield door (SDHM). The anti-torque panel is completely passive and will be generally replaced in its original position. The shield door will be transported to the hot cell and replaced with a change out replacement part while door seals are replaced on the removed door.

Blanket sector replacement is accomplished using a separate machine for each blanket sector. The sector between TF coils is removed radially whereas the blanket sector under the TF coils is translated laterally prior to extraction radially. Each sector is floated on a gas bearing pad for removal and guided by the maintenance machine.

Beryllium Coating Replenishment -- The 1.0 mm Be coating on the first wall and limiter is expected to last six years and be replaced as part of the new blanket sectors; however, due to uncertainties in predicting erosion rates we have chosen to provide for replenishment of the first wall surface. Replenishment is accomplished during the annual shutdown period by utilizing a maintenance machine that plasma sprays 90° of the torus in either direction from the shield door opening. Spraying of the remaining sectors is accomplished after the four spent blanket sectors are removed and prior to the insertion of new blankets. The machine incorporates a vacuum door that interfaces with the shield seal surface to permit plasma spraying in a vacuum and has an arm that can traverse within a few centimeters of the interior of the blanket surface. During each coating operation, a new surface thickness of 0.3 mm will be applied.

Vacuum Pump Molecular Sieve and Isolation Valve Replacement -- The molecular sieve material in the vacuum pump degrades during operation due to accumulation of nonregenerative impurities that break down and block the ceramic granules. A replacement interval of two years was selected based on discussions with LINDE personnel[10]. The required interval is greatly dependent on the species being pumped and requires further investigation. The vacuum pump isolation valves are expected to have a life of two years as discussed in Chap. 19.3.1.

A modular replacement approach has been selected for scheduled maintenance, whereby, the vacuum pump and valve are replaced as a unit. The removed module is then refurbished in the hot cell for the next year's annual

maintenance cycle. Forty-eight pump and valve modules are in the reactor. Two modules are located under each shield pod. One half of the modules are replaced each year. Replacement is accomplished by a special purpose manipulator. The shield pod is removed by the same manipulator that actuates the latching system. The cryogenic and valve actuator lines are disconnected using a common, quick disconnect. The valve and pump bodies are removed by attaching the manipulator to the assembly and actuating a standarized latch drive to release the vacuum seal flange. The sequence of removal is given in Table 19-11 below:

Table 19-11. Vacuum Pump and Valve Replacement

Level 1 Task	Level 2 Task	Duration	
Access	Shield Pod Removal		(5 h)
	Position IVHU	2 h	
	Open latch	1/2 h	
	Remove Pod	2 h	
	Store Pod	1/2 h	
Removal	Pump and Valve Removal		(3 h)
	Disconnect connector	1/2 h	
	Attach IVHU to valve body	1 h	
	Actuate latches	1/2 h	
	Remove assembly	1 h	
	Second Pump and Valve Removal		(3 h)
Replace	Pump and Valve Replacement		(4 h)
	Position assembly	2 h	
	Actuate latches	1 h	
	Connect connector	1 h	
	Second Pump and Valve Replacement		(4 h)
	Install Shield Pod		(4 h)
	Position Pod	3 h	
	Actuate Latches	1 h	
	Withdraw IVHU		(1 h)
	TOTAL:		24 h

Valve and pump replacement is sequenced to prevent interference with blanket sector replacement. Annually, twelve days are required to replace the pumps and valves. These operations can be fit around blanket replacement and still meet the 28 day scheduled annual outage time. Because of the valve life limitations, an additional shield plug is provided over the valve stem to permit seal replacement without removal. It is accomplished with a special purpose manipulator that first removes the shield plug over the valve stem, and then removes the stem and replaces it with a new part. A standardized latch is used for the shield plug and isolation valve stem. A quick release plug is incorporated at the valve stem interface to disconnect the actuator controls as the stem is removed. Time for replacement is expected to be 12 h, excluding shutdown and startup.

19.3.5.2 Total Reactor Scheduled Maintenance Assessment

Following the estimates of individual maintenance action durations for the first wall/blanket sectors and vacuum pump control valves, an assessment has been made of the scheduled downtime required for typical maintenance actions on each component or major subassembly of the STARFIRE reactor system. This assessment excludes all facility, turbine plant and miscellaneous equipment.

Table 19-12 defines the principal components of the reactor system and the scheduled maintenance status of these components. This is followed by Table 19-13 which provides descriptive information for each maintenance action conducted during scheduled maintenance periods. The reactor components are listed by cost account to assure that all reactor systems and auxiliary equipment are included in the assessment. The breakdown of each system into replaceable components or subassemblies is extrapolated from the design definitions provided in this report to allow the inclusion of as many maintenance actions as can be forseen at this time.

The assumptions used in making the assessment of each maintenance action and the meaning of the abbreviated descriptions used in both tables are defined below and in the notes of Table 19-14.

- The scheduled maintenance status for an item is either periodic or no requirement is believed to exist. In the latter case, the word

Table 19-12. STARFIRE Reactor System Breakdown for Maintenance Analysis
(By Component or Subassembly)

Account Number	Replaceable Component (Subassembly)	Scheduled Maintenance Status (1)	Scheduled Maintenance Action	Number of Components In Class(6)/ Comp. Life, Yrs	Redundancy Level(3) Percent
22.01 -					
.01	First wall/blanket system				
	13.7° Sector (A)	Periodic	Rework first wall/blanket	12/6	0
	16.3° Sector (B)	Periodic	Rework first wall/blanket	12/6	0
	Blanket coating	Periodic	Recoat thru open sector	2/1	0
	Limiters	Periodic	Replace with first wall/blanket	12/6	0
.02	Shield				
	Shield door	Periodic	Vacuum seal replacement	12/6	0
	Vacuum pump shield (pod)	None	None	12U + 12 L/20	0
	Vacuum duct shield	None	None	12U + 12 L/20	0
	RF & ECRH duct shield	Periodic	Coolant connector seal replacement	12/6	0
	Fuel injection shield	None	None	4/6	0
	Cooling line shields	Periodic	Coolant connector seal replacement	24/6	0
.03	Magnets				
	TF coils	None	None	12/40	0
	EF coils/OH coils, upper, external	None	None	3/40	0
	EF coils/OH coils, lower, external	None	None	3/40	0
	CF coils (lower inboard)	None	None	4/40	0
	OH coils/EF coils in core	None	None	8/40	0
.04	RF heating and current drive				
	Cross field amplifiers	Periodic	Replace amplifier	432/3	2
	Wave guide, blanket section	Periodic	Replace with blanket sector	12/6	0
	Wave guide, bundle B	Periodic	Replace RF bundle line segment seals	12/6	0
	Wave guide, distribution	None	None	12 Sets/40	0
	Phase shifter	Periodic	Replace phase shifter	432/10	2
	Circulator/directional coupler	None	None	432/40	0
	Window Assembly	Periodic	Replace windows when servicing blanket	36/6	2
	Grill	Periodic	Replace grill with blanket module	12/6	0
	SF_6 supply lines and valves	None	None	1000m/40	0
.05	Primary structure support				
	Reactor centerpost	None	None	1/40	0
	Reactor support structure	None	None	1/40	0
	Antitorque panels	Periodic	Removed with blanket sector	12/40	0
	Equipment support structure	None	None	1/40	0
	Centerpost support struts	None	None	8/40	0

Table 19-12. STARFIRE Reactor System Breakdown for Maintenance Analysis (Cont'd)
(By Component or Subassembly)

Account Number	Replaceable Component (Subassembly)	Scheduled Maintenance Status	Scheduled Maintenance Action	Number of Components In Class(6)/ Comp. Life, Yrs	Redundancy Level(3) Percent
22.01 - .06	Reactor vacuum system				
	Plasma Chamber System				
	Cryosorption pumps	Periodic	Replace cryosorption units	48/2	8
	Cryopump regeneration valves	Periodic	Replace valve stem and face	48/2	8
	Cryopump isolation valves	Periodic	Inspection	24/10	8
	Roughing pumps/motors	Periodic	Replace pump for overhaul	2/5	10
	Roughing regeneration valves	Periodic	Inspection	24/10	8
	Equipment isolation valves	Periodic	Inspecton	52/10	0
	Roughing vacuum lines	None	---	400m/40	0
	Traps	Periodic	Cleaning	2/10	100
	Magnet dewar system				
	Roughing pumps/motors	Periodic	Replace pump for overhaul	2/5	100
	Equipment isolation valves	Periodic	Inspection	36/10	0
	Roughing vacuum lines	None	---	400m/40	0
	Traps	Periodic	Cleaning	2/10	100
	Tritium facility vacuum				
	See 22.05, 22.06	---	---	---	---
	Radwaste system				
	See 22.04	---	---	---	---
.07	Power supply and switching				
	ECRH plasma breakdown				
	High voltage switch gear	Periodic	Inspection, test	2/20	0
	High voltage transformer	None	---	2/40	0
	High voltage rectifier	None	---	2/40	0
	Crowbar	Periodic	Inspection, test	2/40	0
	Regulator	Periodic	Inspection, test	2/20	0
	Low voltage distribution	None	---	400m/40	0
	Low voltage switchgear	Periodic	Inspection, test	24/20	0
	Controls	Periodic	Inspection, test	24/10	0
	RF heating and current drive				
	Power supply system	Periodic	Inspection, test	432/20	10
	TF Magnets				
	Power supply system	Periodic	Inspection, test	1/20	0
	Dump resistor system	Periodic	Inspection, test	12/40	100
	EF Magnets				
	Power supply system	Periodic	Inspection, test	1/20	0
	Dump resistor system	Periodic	Inspection, test	8/40	100
	OH Magnets				
	Power supply system	Periodic	Inspection, test	1/20	0
	Dump resistor system	Periodic	Inspection, test	6/40	100
	CF Magnets				
	Power supply system	Periodic	Inspection, test	4/20	0
	Switch gear sets	Periodic	Inspection, test	4/10	0
	Uninteruptable power system	Periodic	Inspection, test	2/40	100

Table 19-12. STARFIRE Reactor System Breakdown for Maintenance Analysis (Cont'd)
(By Component or Subassembly)

Account Number	Replaceable Component (Subassembly)	Scheduled Maintenance Status	Scheduled Maintenance Action	Number of Components In Class(6)/ Comp. Life, Yrs	Redundancy Level(3) Percent
22.01 - .09	ECRH Plasma breakdown				
	Gyrotrons	Periodic	Inspection, test	24/5	17
	Gyrotron mount assemblies	Periodic	Inspection	24/20	17
	Wave guides (bundle B, 22.01.04)	None	---	24/40	17
22.02 -	Main heat transfer systems				
.01	Primary coolant system				
	Primary coolant pumps/motors	Periodic	Replace pump for overhaul	4/5	0
	PC Line connections/mounts	Periodic	Inspection	176/40	0
	Coolant line bundle A	Periodic	Coolant seal replacement	48/6	0
	PC flow control valves	Periodic	Inspection, test	24/10	0
	PC equipment isolation valves	Periodic	Inspection, test	48/20	0
	Drain valves	Periodic	Inspection	20/20	0
	Purge/relief valves	Periodic	Inspection	20/20	0
	Purge line connection	None	---	40/40	0
	Steam generators	Periodic	Cleaning	4/40	0
	Primary coolant reservoir	None	---	2/40	0
	PC sump pump	Periodic	Inspection, test	1/5	0
	PC loop pressurizers	Periodic	Inspection, test	2/10	0
	Cleanup filters	Periodic	Cleaning	2/10	0
	Cleanup system valves	Periodic	Inspection, test	4/20	0
.03	Limiter cooling system				
	Limiter coolant pumps/motors	Periodic	Replace pump for overhaul	2/5	0
	LC line connections/mounts	Periodic	Inspection	132/40	0
	LC flow control vlaves	Periodic	Inspection, test	12/10	0
	Equipment isolation valves	Periodic	Inspection, test	24/20	0
	Feedwater heat exchangers	Periodic	Cleaning	3/40	0
	Coolant reservoir	None	---	1/40	0
	LC loop pressurizer	Periodic	Inspection, test	1/10	0
	Cleanup filters	Periodic	Cleaning	1/10	0
	Cleanup system valves	Periodic	Inspection, test	2/20	0
.04	Residual heat cooling system				
	Residual heat loop pumps/motors	Periodic	Replace pump for overhaul	2/5	0
	RH line connections/mounts	Periodic	Inspection	22/40	0
	Residual heat loop valves	Periodic	Inspection, test	9/20	0
	RH loop heat exchangers	Periodic	Cleaning	1/40	0
22.03 -	Cryogenic cooling system				
.01	He refrigerator/liquefier	Periodic	Purge trapped impurities as required	8/40	0
.02	LHe transfer/storage				
	LHe storage dewar	None	---	2/40	0
	LHe dewar pumps	Periodic	Replace pump for overhaul	3/5	0
	LHe line connections/mounts	None	---	212/40	0
	LHe flow control valves	Periodic	Inspection, test	102/20	0

Table 19-12. STARFIRE Reactor System Breakdown for Maintenance Analysis (Cont'd)
(By Component or Subassembly)

Account Number	Replaceable Component (Subassembly)	Scheduled Maintenance Status	Scheduled Maintenance Action	Number of Components In Class(6)/ Comp. Life, Yrs	Redundancy Level(3) Percent
22.03 - .03	GHe transfer/storage				
	GHe storage tanks	None	---	7/40	0
	GHe compressors	Periodic	Replace compressors for overhaul	8/40	0
	Oil removal systems	Periodic	Clean separator systems	2/40	0
	Warm GHe line connections/mounts	Periodic	Inspection	60/40	0
	Cold GHe line connections/mounts	None	---	144/40	0
	GHe equipment isolation valves	None	---	81/20	0
.04	LN_2 system				
	Nitrogen liquefaction system	None	---	2/40	0
	LN_2 storage dewar	None	---	2/40	0
	LN_2 + GN_2 line connections/mounts	None	---	460/40	0
	LN_2 flow control valves	Periodic	Inspection, test	10/20	0
	N_2 equipment isolation valves	None	---	214/40	0
	N_2 supply storage tanks	None	---	10/40	0
22.04 - .01	Radioactive waste treatment				
	Liquid waste storage				
	Surge tanks	None	---	2/40	100
	Pumps/motors	Periodic	Replace pumps for overhaul	4/5	0
	Mixer	Periodic	Replace mixer for overhaul	1/10	0
	Filters	Periodic	Cleaning	4/10	0
	Condensor	Periodic	Cleaning	2/40	100
	Separators (ion exchange)	Periodic	Service exchange media	2/20	0
	Separators (absorbers)	Periodic	Service absorber media	2/20	0
	Piping connections/mounts	None	---	200/40	0
	Valves/traps	Periodic	Inspection, test	75/20	0
	Electrolysis units	Periodic	Service electrolyte	2/20	0
.02	Gaseous waste processing system				
	Compressors	Periodic	Replace compressors for overhaul	2/40	100
	Separators (molecular sieve)	Periodic	Service media	2/40	0
	Condensors	Periodic	Cleaning	2/40	100
	Pumps/motors	Periodic	Replace pump for overhaul	4/5	0
	Filters	Periodic	Service filter units	2/1	0
	Piping connections/mounts	None	---	200/40	0
	Valves/dampers	Periodic	Inspection, test	75/20	0
	Heat exchangers	Periodic	Cleaning	2/40	0
	Blowers	Periodic	Inspection	2/20	0
	Storage tanks	None	---	2/40	0

Table 19-12. STARFIRE Reactor System Breakdown for Maintenance Analysis (Cont'd)
(By Component or Subassembly)

Account Number	Replaceable Component (Subassembly)	Scheduled Maintenance Status	Scheduled Maintenance Action	Number of Components In Class(6)/ Comp. Life, Yrs	Redundancy Level(3) Percent
22.04 - .03	Solid waste processing equipment				
	Dryers	Periodic	Service moving parts, inspect	2/40	100
	Handling system (conveyors)	Periodic	Service moving parts, inspect	2/40	100
	Classification system	Periodic	Service moving parts, inspect	2/40	100
	Compactor/cutter	Periodic	Service moving parts, inspect	2/10	100
	Mixer/solidifier	Periodic	Service moving parts, inspect	2/10	100
	Storage system	None	---	1/40	0
	Transport casks	Periodic	Operationaly seal inspection	6/40	200
22.05 -	Tritium facility systems				
.01	Fuel purification systems				
	Fuel cleanup unit (Catalytic oxidizers, electrolysis)	Periodic	Service electrodes, catalysts	4/20	100
	Blanket Recovery Units (He separator, ion exchange, electrolysis)	Periodic	Service electrodes, filters, etc.	24/20	0
	Surge Tanks	None	---	2/40	100
.03	Fuel preparation system				
	Fuel blenders (Mixing tanks, valves, pumps)	None	---	4/40	100
.04	Fuel inspection system				
	Fuel gas puffer	Periodic	Inspect, test	4/10	100
	Plasma Guns	Periodic	Replace electrodes	4/10	100
	Distribution system	None	---	1/20	0
.05	Fuel storage				
	D_2 supply storage	None	---	1/40	0
	ST storage	None	---	1/40	0
	T_2 storage	None	---	1/40	0
.06	Tritium extraction and recovery				
	Tritium waste treatment unit	Periodic	Inspect	1/20	100
	Tritiated water recovery unit (Ion exchange, catalysis, electrolysis)	Periodic	Service electordes catalysts	1/20	100
	Isotope separation unit (Distillation Cascade)	Periodic	Cleanout	4/10	100
	Detritiated gas storage	None	---	1/40	0
	He storage	None	---	1/40	0
	Tritiated waste storage	None	---	1/40	0
	Gas compressors	Periodic	Replace for overhaul	2/5	100
	Transfer pump unit	Periodic	Replace for overhaul	23/5	100
	Transfer line connections	None	---	522	100
	Transfer line valves	Periodic	Inspection, test	174	100

Table 19-12. STARFIRE Reactor System Breakdown for Maintenance Analysis (Cont'd)
(By Component or Subassembly)

Account Number	Replaceable Component (Subassembly)	Scheduled Maintenance Status	Scheduled Maintenance Action	Number of Components In Class(6)/ Comp. Life, Yrs	Redundancy Level(3) Percent
22.05 - .07	Atmosphere tritum recovery system				
	Atmosphere cleanup units (Catalytic oxidation, mol. sheves)				
	Reactor building	Periodic	Service molecular sieves, catalyst	24/40	0
	Hot cells	Periodic	Service molecular sieves, catalyst	5/40	0
	Tritium facility	Periodic	Service molecular sieves, catalyst	5/40	0
22.06 - .01	Maintenance equipment				
	Facility remote handling equip:				
	Cranes				
	Reactor room	Periodic	Inspection, servicing	2/40	100
	Hot cells	Periodic	Inspection, servicing	5/40	100
	Tritium facility	Periodic	Inspection, servicing	2/40	0
	Bridge manipulators				
	Reactor room	Periodic	Inspection, servicing	2/20	100
	Hot cells	Periodic	Inspection, servicing	2/20	0
	Turntables	Periodic	Inspection, servicing	3/40	0
	Monorail switches	Periodic	Inspection, servicing	3/40	0
	Monorail	Periodic	Inspection	1/40	0
	Airlock Systems	Periodic	Inspection, servicing	2/40	0
	Mobile remote handling equipment				
	Coolant line removal machine	Periodic	Inspection, servicing	2/20	100
	Transport carriage	Periodic	Inspection, servicing	2/20	100
	Antitorque panel handling machine	Periodic	Inspection, servicing	2/20	100
	Shield door handling machine	Periodic	Inspection, servicing	2/20	100
	Blanket sector handling machine	Periodic	Inspection, servicing	2/20	100
	First wall coating machine	Periodic	Inspection, servicing	2/20	100
	Isolation valve removal unit	Periodic	Inspection, servicing	2/20	100
	Universal remote maintenance vehicle	Periodic	Inspection, servicing	2/20	100
	Mobile manipulator vehicle	Periodic	Inspection, servicing	2/20	100
	Hot cell remote handling equipment	Periodic	Inspection, servicing	1/10	0
	Hot cell equipment	Periodic	Inspection, servicing	1/10	0
.02	Special heating systems				
	Coolant startup heating	None	---	4/10	0
	Pressurizer heaters	None	---	4/10	0
.03	Coolant makeup systems (14)				
	Raw water makeup system	Periodic	Replace pump for overhaul	2/40	100
	Demineralized water system	Periodic	Service water purification units	2/40	100
	Primary cooling water makeup	Periodic	Replace pump for overhaul	2/40	100
	PC water additive system	Periodic	Inspection	1/40	0

Table 19-12. STARFIRE Reactor System Breakdown for Maintenance Analysis (Cont'd)
(By Component or Subassembly)

Account Number	Replaceable Component (Subassembly)	Scheduled Maintenance Status	Scheduled Maintenance Action	Number of Components In Class(6)/ Comp. Life, Yrs	Redundancy Level(3) Percent
22.06 - .04	Gas systems (14)				
	Instrument air system (Compressors, filters, tanks, valves)	Periodic	Replace compressor for overhaul	2/40	100
.05	Inert atmosphere system (14)				
	Reactor building	Periodic	Replace compressor for overhaul	2/40	100
	Hot cells	Periodic	Replace compressor for overhaul	2/40	100
	Pressure control system	None	---	2/10	100
	Gas storage system	None	---	1/40	0
	Penetrations	None	---	500/40	0
.06	Leak detection system (14)				
	Auxiliary vacuum system	Periodic	Replace pump for overhaul	2/5	100
.07	Closed loop coolant system				
	Cooling water pumps	Periodic	Replace pump for overhaul	3/5	0
	Cooling water heat exchangers	Periodic	Cleaning	3/40	0
	Surge tank	None	---	1/40	0
	Building heat exchangers				
	Reactor building	Periodic	Cleaning	2/40	0
	Tritium reprocess and storage	Periodic	Cleaning	2/40	0
	Electrical equipment	Periodic	Cleaning	2/40	0
	RF power supply	Periodic	Cleaning	2/40	0
	Hot cells	Periodic	Cleaning	2/40	0
	Atmospheric tritium clean up	Periodic	Cleaning	30/40	0
	Waste processing	Periodic	Cleaning	3/40	0
	Distribution lines (connections)				
	Reactor room	Periodic	Inspection	832/40	0
	Vacuum pump cooling, etc.	Periodic	Inspection	216/40	0
	Valves				
	Shielding	Periodic	Inspection, test	408/20	0
	CF coils	Periodic	Inspection, test	8/20	0
	Vacuum pumps, heat exchange	Periodic	Inspection, test	108/20	0
.08	Standby cooling system (14)	Periodic	Inspection, test	1/40	0
22.07	Instrumentation & control				
.01	Reactor I & C equipment				
	Equipment control devices	Periodic	Test operation, observe	6000/20	100
	Microprocessors	Periodic	Built in self check	200/10	300
	Control processor	Periodic	Built in self check	20/10	300
	Plasma diagnostics	Periodic	Built in self check	60/10	500
	Remote access controllers	Periodic	Computer check maintenance equipment	16/20	200

Table 19-12. STARFIRE Reactor System Breakdown for Maintenance Analysis (Cont'd)
(By Component or Subassembly)

Account Number	Replaceable Component (Subassembly)	Scheduled Maintenance Status	Scheduled Maintenance Action	Number of Components In Class(6)/ Comp. Life, Yrs	Redundancy Level(3) Percent
22.07 -					
.02	Monitoring systems				
	Facility computer	Periodic	Builtin system self check	3	200
	Master timer	Periodic	Computer check timer	3	200
	Master control console	Periodic	Computer check control consoles	3	200
	Safety and interlock system	Periodic	Computer check interlock controllers	300	200
	Remote access communications	Periodic	Computer check maintenance communications	16	200
	Remote access control system	Periodic	Computer check maintenance EQ devices	16	200
.03	Instrumentation sensors				
	Magnet sensors				
	Internal	Periodic	Computer check sensors	12000/40	300
	External (accessible)	Periodic	Calibrate sensors	1200/10	300
	Power supplies	Periodic	Calibrate sensors	64/10	300
	RF system sensors				
	Amplifier sensors	Periodic	Calibrate sensors	1730/10	300
	Distribution system, internal	Periodic	Computer check sensors	1200/10	300
	Distribution system, external	Periodic	Calibrate sensors	400/10	300
	Power supplies	Periodic	Calibrate sensors	360/10	300
	ECRH system sensors				
	Gyrotron sensors	Periodic	Calibrate sensors	240/10	300
	Distribution system, internal	Periodic	Computer check sensors	1200/10	300
	Distribution system, external	Periodic	Calibrate sensors	400/10	300
	Power supplies	Periodic	Calibrate sensors	360/10	300
	Vacuum system sensors				
	Vacuum sensors	Periodic	Replace ion gages	300/1	200
	Equipment status sensors	Periodic	Computer check sensors	900/10	200
	Limiters				
	Coolant system, internal	Periodic	Computer check sensors	480/10	300
	Coolant system, external	Periodic	Calibrate sensors	200/10	300
	Equipment status sensors	Periodic	Computer check sensors	200/10	300
	Primary cooling system				
	Reactor room coolant	Periodic	Calibrate sensors	960/10	300
	External coolant sensors	Periodic	Calibrate sensors	190/10	300
	Blanket sensors	Periodic	Computer check sensors	9600/10	300
	Equipment status sensors	Periodic	Computer check sensors	600/10	300
	Closed coolant loop sensors	Periodic	Calibrate sensors	4200/10	200
	Cryogenic system				
	Cryogen sensors	Periodic	Calibrate sensors	1330/10	200
	Equipment status sensors	Periodic	Computer check sensors	2550/10	200
	Tritium processing system	Periodic	Calibrate sensors	1700/10	200
	Waster processing system	Periodic	Calibrate sensors	1100/10	200
	Structure	Periodic	Computer check sensors	4800/40	300
	Remote handling system				
	Equipment status sensors	Periodic	Calibrate sensors	1900/10	200
	Feedback & viewing sensors	Periodic	Calibrate sensors	300/10	200

Table 19-13. STARFIRE Scheduled Maintenance Downtime Estimates
(By Component or Subassembly)

Account Number	Replaceable Component (Subassembly)	Scheduled Maintenance Interval(2) Operating Days	Downtime Per Maintenance Action(4) Days (24 hr)	Number Maintenance Per Scheduled Shutdown	Maintenance Equipment Required Code/Quantity
22.01 -					
.01	First wall/blanket system				
	13.7° Sector (A)	1642 (4.5 yrs)	9.7	2	(CL,RF,SD,AP,BM,BS)/2
	16.3° Sector (B)	1642 (4.5 yrs)	11.3	2	
	Blanket coating	274 (0.75 yr)	2.5	2	CS/2
	Limiters	1642 (4.5 yrs)	---	2	SEE FW/B
.02	Shield				
	Shield door	1642 (4.5 yrs)	1.0(8)	2	CL,RF,AP,SD,BM
	Vacuum pump shield (pod)	---	---	---	BM,MM,BC
	Vacuum duct shield	---	---	---	BM,MM,BC
	RF & ECRH duct shield	1642 (4.5 yrs)	.3(8)	2	(RF)/2
	Fuel injection shield	---	---	---	BM,MM,BC
	Cooling line shields	1642 (4.5 yrs)	.3(8)	2	(CL)/2
.03	Magnets				
	TF coils	---	---	---	(BM,BC)/1,MM/2,SE
	EF coils/OH coils, upper, external	---	---	---	(BM,BC)/1,MM/2,SE
	EF coils/OH coils, lower, external	---	---	---	BC/1,MM/2,SE
	CF coils (lower inboard)	---	---	---	BC/1,MM/2,SE
	OH coils/EF coils in core	---	---	---	(BM,BC)/1,SE
.04	RF heating and current drive				
	Cross field amplifiers	274 (.75 yr)	20.0(10)	100	(TD,LC)/2,HT
	Wave guide, blanket section	1642 (4.5 yrs)	9.7(8)	2	SEE 13.7° Sector
	Wave guide, bundle B	1642 (4.5 yrs)	.3(8)	2	(RF)/2
	Wave guide, distribution	---	---	---	(TD,MV)/1
	Phase shifter	274 (.75 yr)	4.7(10)	12	(TD,LC)/1,HT
	Circulator/directional coupler	---	---	---	(TD,MV/1)
	Window Assembly	1642 (4.5 yrs)	.3(8)	2	(RF)/2
	Grill	1642 (4.5 yrs)	.3(8)	2	(RF)/2
	SF_6 supply lines and valves	---	---	---	HT
.05	Primary structure support				
	Reactor centerpost	---	---	---	Unknown
	Reactor support structure	---	---	---	Unknown
	Antitorque panels	274 (.75 yrs)	---	---	(CL,RF,TC,AP,BM)/1
	Equipment support structure	---	---	---	(MM,BC)/1,Jacks
	Centerpost support struts	---	---	---	(MM,MV,BC)/1,Jacks

Table 19-13. STARFIRE Scheduled Maintenance Downtime Estimates (Cont'd)
(By Component or Subassembly)

Account Number	Replaceable Component (Subassembly)	Scheduled Maintenance Interval(2) Operating Days	Downtime Per Maintenance Action(4) Days (24 hr)	Number Maintenance Per Scheduled Shutdown	Maintenance Equipment Required Code/Quantity
22.01 - .06	Reactor vacuum system				
	Plasma Chamber System				
	Cryosorption pumps	548 days (1.5 yrs)	17.9	24	(BM,MM,BC)/2,SE
	Cryopump regeneration values	548 days (1.5 yrs)	14.4	24	(BM,MM,BC)/2,SE
	Cryopump isolation valves	274 days (.75 yrs)	1.2	24	(BM,MM,BC)/2,SE
	Roughing pumps/motors	1369 days (3.75 yrs)	1.5	---	(BC,MM)/1
	Roughing regeneration valves	274 days (.75 yrs)	1.2	24	(BM,MM)/1
	Equipment isolation valves	274 days (.75 yrs)	2.6	52	(BM,MM)/1
	Roughing vacuum lines	---	---	---	(BM,MM)1,SE
	Traps	548 days (.75 yrs)	1.5	1	(BM,MM)/1
	Magnet dewar system				
	Roughing pumps/motors	1369 days (3.75 yrs)	1.5	---	(BC,MM)/1
	Equipment isolation valves	274 days (.75 yrs)	1.8	36	(BM,MM)/1
	Roughing vacuum lines	---	---	---	(BM,MM)/1,SE
	Traps	548 days (.75 yrs)	1.5	1	(BM,MM)/1
	Tritium facility vacuum				
	See 22.05, 22.06	---	---	---	---
	Radwaste system				
	See 22.04	---	---	---	---
.07	Power supply and switching				
	ECRH plasma breakdown				
	High voltage switch gear	274 days (.75 yrs)	.2(10)	2	TD,OC,Hand tools
	High voltage transformer	---	---	---	TD,OC,Hand tools
	High voltage rectifier	---	---	---	TD,OC,Hand tools
	Crowbar	274 days (.75 yrs)	.2(10)	2	TD,OC,Hand tools
	Regulator	274 days (.75 yrs)	.2(10)	2	TD,OC,Hand tools
	Low voltage distribution	---	---	---	TD,Hand tools
	Low voltage switchgear	274 days (.75 yrs)	1.8(10)	24	TD,Hand tools
	Controls	274 days (.75 yrs)	1.8(10)	24	TD,Hand tools
	RF heating and current drive				
	Power supply system	274 days (.75 yrs)	1.5(10)	20	TD,Hand tools
	TF Magnets				
	Power supply system	274 days (.75 yrs)	.2(10)	1	TD,Hand tools
	Dump resistor system	274 days (.75 yrs)	.6(10)	12	TD,Hand tools
	EF Magnets				
	Power supply system	274 days (.75 yrs)	.2(10)	1	TD,Hand tools
	Dump resistor system	274 days (.75 yrs)	.4(10)	8	TD,Hand tools
	OH Magnets				
	Power supply system	274 days (.75 yrs)	.2(10)	1	TD,Hand tools
	Dump resistor system	274 days (.75 yrs)	.3(10)	6	TD,Hand tools
	CF Magnets				
	Power supply system	274 days (.75 yrs)	.4(10)	4	TD,Hand tools
	Switch gear sets	274 days (.75 yrs)	.2(10)	4	TD,Hand tools
	Uninterruptable power system	30 days	---	---	TD,Hand tools

Table 19-13. STARFIRE Scheduled Maintenance Downtime Estimates (Cont'd)
(By Component or Subassembly)

Account Number	Replaceable Component (Subassembly)	Scheduled Maintenance Interval(2) Operating Days	Downtime Per Maintenance Action(4) Days (24 hr)	Number Maintenance Per Scheduled Shutdown	Maintenance Equipment Required Code/Quantity
22.01 - .09	ECRH Plasma breakdown				
	Gyrotrons	274 (.75 yrs)	1.8(10)	24	(TD,OC)/1,Hand tools
	Gyrotron mount assemblies	274 (.75 yrs)	1.2(10)	24	(TD,OC)/1,Hand tools
	Wave guides (bundle B, 22.01.04)	---	---	---	(RF,TC)/1
22.02 -	Main heat transfer systems				
.01	Primary coolant system				
	Primary coolant pumps/motors	1369 (3.75 yrs)	2.6	1	(BC,BM,MM)/1,SE
	PC Line connections/mounts	274 (.75 yrs)	7.6	152	(BM,MM)/2,SE
	Coolant line bundle A	1642 (4.5 yrs)	1.0(8)	8	(CL,TC)/1
	PC flow control valves	274 (.75 yrs)	1.8	24	(BM,MM)/1,SE
	PC equipment isolation valves	274 (.75 yrs)	3.6	48	(BM,MM)/1,SE
	Drain valves	274 (.75 yrs)	.8	16	(BM,MM)/1,SE
	Purge/relief valves	274 (.75 yrs)	.8	16	(BM,MM)/1,SE
	Purge line connection	---	---	---	(BM,MM)/1,SE
	Steam generators	2738 (7.5 yrs)	60	---	(BC,BM,MM)/1,SE
	Primary coolant reservoir	---	10	---	(BC,BM,MM)/1,SE
	PC sump pump	274 (.75 yrs)	.1	1	(BM,MM)/1,SE
	PC loop pressurizers	274 (.75 yrs)	.4	2	(BC,BM,MM)/1,SE
	Cleanup filters	274 (.75 yrs)	---	2	(BC,BM,MM)/1,SE
	Cleanup system valves	274 (.75 yrs)	.3	4	(BM,MM/1,SE
.03	Limiter cooling system				
	Limiter coolant pumps/motors	1369 (3.75 yrs)	2.6	1	(BC,BM,MM)/1,SE
	LC line connections/mounts	274 (.75 yrs)	4.8	96	(BM,MM)/1,SE
	LC flow control vlaves	274 (.75 yrs)	.9	12	(BM,MM)/1,SE
	Equipment isolation valves	274 (.75 yrs)	1.8	24	(BM,MM)/1,SE
	Feedwater heat exchangers	2738 (7.5 yrs)	30	---	(BC,BM,MM)/1,SE
	Coolant reservoir	---	---	---	(BC,BM,MM)/1,SE
	LC loop pressurizer	274 (.75 yrs)	.2	1	(BC,BM,MM)/1,SE
	Cleanup filters	274 (.75 yrs)	---	1	(BC,BM,MM)/1,SE
	Cleanup system valves	274 (.75 yrs)	.2	2	(BM,MM)/1,SE
.04	Residual heat cooling system				
	Residual heat loop pumps/motors	1369 (3.75 yrs)	2.6	1	(BC,BM,MM)/1,SE
	RH line connections/mounts	274 (.75 yrs)	1.1	22	(BM,MM)/1,SE
	Residual heat loop valves	274 (.75 yrs)	.7	9	(BM,MM)/1,SE
	RH loop heat exchangers	2738 (7.5 yrs)	30	---	(BC,BM,MM)/1,SE
22.03 -	Cryogenic cooling system				
.01	He refrigerator/liquefier	---	.4(10)	1	(TD,OC)/1,Hand tools
.02	LHe transfer/storage				
	LHe storage dewar	---	---	---	(TD,OC)/1,Hand tools
	LHe dewar pumps	1369 (3.75 yrs)	1.0(10)	---	(TD,OC)/1,Hand tools
	LHe line connections/mounts	---	---	---	(BC,MM)/1,SE
	LHe flow control valves	274 (.75 yrs)	7.7	102	(BC,MM)/1,SE

Table 19-13. STARFIRE Scheduled Maintenance Downtime Estimates (Cont'd)
(By Component or Subassembly)

Account Number	Replaceable Component (Subassembly)	Scheduled Maintenance Interval(2) Operating Days	Downtime Per Maintenance Action(4) Days (24 hr)	Number Maintenance Per Scheduled Shutdown	Maintenance Equipment Required Code/Quantity
22.03 -					
.03	GHe transfer/storage				
	GHe storage tanks	---	---	---	FL,Hand tools
	GHe compressors	1369 (3.75 yrs)	4.0	2	(TD,OC)/1,Hand tools
	Oil removal systems	1369 (3.75 yrs)	7.0	1	(TD,OC)/1,Hand tools
	Warm GHe line connections/mounts	274 (.75 yrs)	3.0	60	(BM,MM)/1,SE
	Cold GHe line connections/mounts	---	---	---	(TD,OC)/1,Hand tools
	GHe equipment isolation valves	---	---	---	(TD,OC)/1,Hand tools
.04	LN_2 system				
	Nitrogen liquefaction system	---	---	---	(TD,OC)/1,Hand tools
	LN_2 storage dewar	---	---	---	(TD,OC)/1,Hand tools
	LN_2 + GN_2 line connections/mounts	---	---	---	(BM,MM)/1,SE
	LN_2 flow control valves	274 (.75 yrs)	.7	10	(BM,MM)/1,SE
	N_2 equipment isolation valves	---	---	---	(BM,MM)/1,SE
	N_2 supply storage tanks	---	---	---	(FL,Hand tools
22.04 -	Radioactive waste treatment				
.01	Liquid waste storage				
	Surge tanks	---	---	---	(BM,MM,OC)/1,SE
	Pumps/motors	1369 (3.75 yrs)	2.6	1	(ABM,OC)/1,SE
	Mixer	1369 (3.76 yrs)	2.6	1	(ABM,OC)/1,SE
	Filters	274 (.75 yrs)	---	1	(ABM,OC)/1,SE
	Condensor	1369 (3.75 yrs)	---	1	(ABM,BM,OC)/1,SE
	Separators (ion exchange)	274 (.75 yrs)	---	1	(ABM,OC)/1,SE
	Separators (absorbers)	274 (.75 yrs)	---	1	(ABM,OC)/1,SE
	Piping connections/mounts	---	---	---	(ABM,OC)/1,SE
	Valves/traps	274 (.75 yrs)	5.6	75	(ABM,MV)/1,SE
	Electrolysis units	274 (.75 yrs)	---	1	(ABM,MV)/1,SE
.02	Gaseous waste processing system				
	Compressors	1369 (3.75 yrs)	2.6	1	(ABM,OC)/1,SE
	Separators (molecular sieve)	274 (.75 yrs)	---	1	(ABM,OC)/1,SE
	Condensors	1369 (3.75 yrs)	---	1	(ABM,OC)/1,SE
	Pumps/motors	1369 (3.75 yrs)	2.6	1	(ABM,OC)/1,SE
	Filters	274 (.75 yrs)	---	1	(ABM,OC)/1,SE
	Piping connections/mounts	---	---	---	(ABM,MV)/1,SE
	Valves/dampers	274 (.75 yrs)	5.6	75	(ABM,MV)/1,SE
	Heat exchangers	1369 (3.75 yrs)	---	1	(ABM,MV)/1,SE
	Blowers	274 (.75 yrs)	.2	2	(ABM,OC)/1,SE
	Storage tanks	---	---	---	(ABM,OC)/1,SE

Table 19-13. STARFIRE Scheduled Maintenance Downtime Estimates (Cont'd)
(By Component or Subassembly)

Account Number	Replaceable Component (Subassembly)	Scheduled Maintenance Interval(2) Operating Days	Downtime Per Maintenance Action(4) Days (24 hr)	Number Maintenance Per Scheduled Shutdown	Maintenance Equipment Required Code/Quantity
22.04 - .03	Solid waste processing equipment				
	Dryers	274 (.75 yrs)	---	1	(TD,MV)/1,SE
	Handling system (conveyors)	274 (.75 yrs)	---	1	(TD,MV)/1,SE
	Classification system	274 (.75 yrs)	---	1	(TD,MV)/1,SE
	Compactor/cutter	274 (.75 yrs)	---	1	(TD,MV)/1,SE
	Mixer/solidifier	274 (.75 yrs)	---	1	(TD,MV)/1,SE
	Storage system	---	---	---	(TD,MV,OC)/1,SE
	Transport casks	Each use	---	1	(MV,OC)/1,SE
22.05 -	Tritium facility systems				
.01	Fuel purification systems				
	Fuel cleanup unit (Catalytic oxidizers, electrolysis)	274 (.75 yrs)	.3(12)	1	(TD,OC)/1,Hand tools
	Blanket Recovery Units (He separator, ion exchange, electrolysis)	274 (.75 yrs)	6.0	4	(BM,MM,TC)/2,SE
	Surge Tanks	---	---	---	(TD,OC)/1,Hand tools
.03	Fuel preparation system				
	Fuel blenders (Mixing tanks, valves, pumps)	---	---	---	(TD,OC)/1,SE
.04	Fuel inspection system				
	Fuel gas puffer	274 (.75 yrs)	4.0	4	(MM,BM)/1,SE
	Plasma Guns	274 (.75 yrs)	4.0	4	(MM,BM,TC)/1,SE
	Distribution system	---	---	---	(BM,MM)/1,SE
.05	Fuel storage				
	D_2 supply storage	---	---	---	(TD,OC)/1,Hand tools
	DT storage	---	---	---	(TD,OC)/1,Hand tools
	T_2 storage	---	---	---	(TD,OC)/1,Hand tools
.06	Tritium extraction and recovery				
	Tritium waste treatment unit	274 (.75 yrs)	---	2	TD/1,Hand tools
	Tritiated water recovery unit (Ion exchange, catalysis, electrolysis)	274 (.75 yrs)	---	2	(TD,OD)/1,Hand tools
	Isotope separation unit (Distillation Cascade)	274 (.75 yrs)	---	8	(TD,OC)/1,Hand tools
	Detritiated gas storage	---	---	---	(TD,FL)/1,Hand tools
	He storage	---	---	---	(TD,FL)/1,Hand tools
	Tritiated waste storage	---	---	---	(TD,FL)/1,Hand tools
	Gas compressors	1369 (3.75 yrs)	---	1	(TD,OC)/1,Hand tools
	Transfer pump unit	1369 (3.75 yrs)	---	5	(TD,OC)/1,Hand tools
	Transfer line connections	---	---	---	(TD,OC)/1,Hand tools
	Transfer line valves	274 (.75 yrs)	---	174	(TD,OC)/1,Hand tools

Table 19-13. STARFIRE Scheduled Maintenance Downtime Estimates (Cont'd)
(By Component or Subassembly)

Account Number	Replaceable Component (Subassembly)	Scheduled Maintenance Interval(2) Operating Days	Downtime Per Maintenance Action(4) Days (24 hr)	Number Maintenance Per Scheduled Shutdown	Maintenance Equipment Required Code/Quantity
22.05 - .07	Atmosphere tritum recovery system				
	Atmosphere cleanup units (Catalytic oxidation, mol. sieves)				
	Reactor building	Annual	1.0	1	(BM,MM,TC)/1,SE
	Hot cells	Annual	---	1	(ABM,MV,TD)/1,SE
	Tritium facility	Annual	---	1	(TD,OC)/1,Hand tools
22.06 - .01	Maintenance equipment				
	Facility remote handling equip:				
	Cranes				
	Reactor room	Annual	---	2	BC/1,Hand tools
	Hot cells	Annual	---	5	(BM,OC,MV)/1,SE
	Tritium facility	Annual	---	2	(TD)/1,Hand tools
	Bridge manipulators				
	Reactor room	Annual	---	2	BC/1,Hand tools
	Hot cells	Annual	---	2	(BM,OC,MU)/1,SE
	Turntables	Annual	---	3	(MV,OC)/1,SE
	Monorail switches	Annual	3.0	3	(BC,MM)/1,SE
	Monorail	Annual	3.0	1	(MM,MV)/1,SE
	Airlock Systems	Annual	---	2	(BC,OC,MM,MV)/1,SE
	Mobile remote handling equipment				
	Coolant line removal machine	Annual	---	2	(TD,OC)/1,Hand tools
	Transport carraige	Annual	---	2	(TD,OC)/1,Hand tools
	Antitorque panel handling machine	Annual	---	2	(TD,OC)/1,Hand tools
	Shield door handling machine	Annual	---	2	(TD,OC)/1,Hand tools
	Blanket sector handling machine	Annual	---	2	(TD,OC)/1,Hand tools
	First wall coating machine	Annual	---	2	(TD,OC)/1,Hand tools
	Isolation valve removal unit	Annual	---	2	(TD,OC)/1,Hand tools
	Universal remote matintenance vehicle	Annual	---	2	(TD,OC)/1,Hand tools
	Mobile manipulator vehicle	Annual	---	2	(TD,OC)/1,Hand tools
	Hot cell remote handling equipment	Annual	---	1	(BM,OC,MV)/1,SE
	Hot cell equipment	Annual	---	1	(BM,OC,MV)/1,SE
.02	Special heating systems				
	Coolant startup heating	---	---	---	(TD,OC)/1,Hand tools
	Pressurizer heaters	---	---	---	(TD,FL)/1,Hand tools
.03	Coolant makeup systems (14)				
	Raw water makeup system	1369 (3.75 yrs)	---	1	(TD,FL)/1,Hand tools
	Demineralized water system	274 (.75 yrs)	---	2	(TD,FL)/1,Hand tools
	Primary cooling water makeup	1369 (3.75 yrs)	---	1	(TD,FL)/1,Hand tools
	PC water additive system	274 (.75 yrs)	---	1	(TD,FL)/1,Hand tools

Table 19-13. STARFIRE Scheduled Maintenance Downtime Estimates (Cont'd)
(By Component or Subassembly)

Account Number	Replaceable Component (Subassembly)	Scheduled Maintenance Interval(2) Operating Days	Downtime Per Maintenance Action(4) Days (24 hr)	Number Maintenance Per Scheduled Shutdown	Maintenance Equipment Required Code/Quantity
22.06 -					
.04	Gas systems (14)				
	Instrument air system (Compressors, filters, tanks, valves)	1369 (3.75 yrs)	---	1	(TD,FL)/1,Hand tools
.05	Inert atmosphere system (14)				
	Reactor building	1369 (3.75 yrs)	2.0	2	(BM,MM,BC)/1,SE
	Hot cells	1369 (3.75 yrs)	---	2	(BM,MV,OC)/1,SE
	Pressure control system	---	---	---	(TD)/1,Hand tools
	Gas storage system	---	---	---	(TD,FL)/1,Hand tools
	Penetrations	---	---	---	(BM,MV,MM)/1,SE
.06	Leak detection system (14)				
	Auxiliary vacuum system	1369 (3.75 yrs)	1.5	1	(BC,MM)/1,SE
.07	Closed loop coolant system				
	Cooling water pumps	1369 (3.75 yrs)	2.6	1	(BC,MM)/1,SE
	Cooling water heat exchangers	2738 (7.5 yrs)	30	1	(BC,BM,MM)/1,SE
	Surge tank	---	---	---	(TD,FL)/1,Hand tools
	Building heat exchangers				
	Reactor building	1369 (3.75 yrs)	10	1	(BC,BM,MM)/1,SE
	Tritium reprocess and storage	274 (.75 yrs)	---	2	(TD,SE)/1,Hand tools
	Electrical equipment	274 (.75 yrs)	---	2	(TD,SE)/1,Hand tools
	RF power supply	274 (.75 yrs)	---	2	(TD,SE)/1,Hand tools
	Hot cells	274 (.75 yrs)	---	2	(BM,OC)/1,SE
	Atmospheric tritium clean up	1369 (3.75 yrs)	---	1	(BC,BM,MM)/1,SE
	Waste processing	274 (.75 yrs)	---	3	(BM,OC)/1,SE
	Distribution lines (connections)				
	Reactor room	274 (.75 yrs)	3.2	64	(BM,MM)/1,SE
	Vacuum pump cooling, etc.	274 (.75 yrs)	---	36	(TD,SE)/1,Hand tools
	Valves				
	Shielding	274 (.75 yrs)	30.6	408	(BM,MM)/1,SE
	CF coils	274 (.75 yrs)	.6	8	(BM,MM)/1,SE
	Vacuum pumps, heat exchange	274 (.75 yrs)	---	108	(TD,SE)/1,Hand tools
.08	Standby cooling system (14)	Annual	---	1	(TD,OC)/1,Hand tools
22.07	Instrumentation & control				
.01	Reactor I & C equipment				
	Equipment control devices	Annual	6	6000	(BM,MM,TC)/1,Comp.
	Microprocessors	7	---	200	(BM,MM,TC)/1,Comp.
	Control processor	7	---	20	(BM,MM,TC)/1,Comp.
	Plasma diagnostics	7	---	60	(MM,TC)/1,Comp.
	Remote access controllers	Annual	---	16	(BM,MM,TC)/1,Comp.

Table 19-13. STARFIRE Scheduled Maintenance Downtime Estimates (Cont'd)
(By Component or Subassembly)

Account Number	Replaceable Component (Subassembly)	Scheduled Maintenance Interval(2) Operating Days	Downtime Per Maintenance Action(4) Days (24 hr)	Number Maintenance Per Scheduled Shutdown	Maintenance Equipment Required Code/Quantity
22.07 -					
.02	Monitoring systems				
	Facility computer	7	---	3	TD/1,Hand tools,Comp.
	Master timer	7	---	3	TD/1,Hand tools,Comp.
	Master control console	7	---	3	TD/1,Hand tools,Comp.
	Safety and interlock system	7	---	300	(BM,MM,TC)/1,Comp.
	Remote access communications	Annual	---	16	(BM,MM,TC)/1,Comp.
	Remote access control system	Annual	---	16	(BM,MM,TC)/1,Comp.
.03	Instrumentation sensors				
	Magnet sensors				
	Internal	Continuous	---	12000	Magnet replacement
	External (accessible)	274 (.75 yrs)	---	600(15)	(BM,MM,TC)/1,Comp.
	Power supplies	274 (.75 yrs)	---	64	Hand tools,Comp.
	RF system sensors				
	Amplifier sensors	274 (.75 yrs)	---	865(15)	Hand tools,Comp.
	Distribution system, internal	Continuous	---	1200	(BM,MM,BC)/1,Comp.
	Distribution system, external	274 (.75 yrs)	---	200(15)	Hand tools,Comp.
	Power supplies	274 (.75 yrs)	---	180(15)	Hand tools,Comp.
	ECRH system sensors				
	Gyrotron sensors	274 (.75 yrs)	---	120(15)	Hand tools,Comp.
	Distribution system, internal	Continuous	---	1200	(BM,MM,BC)/1,Comp.
	Distribution system, external	274 (.75 yrs)	---	200(15)	Hand tools,Comp.
	Power supplies	274 (.75 yrs)	---	180(15)	Hand tools,Comp.
	Vacuum system sensors				
	Vacuum sensors	274 (.75 yrs)	25.0	75(15)	(BM,MM,TC)/1,Comp.
	Equipment status sensors	Continuous	---	900	(BM,MM,TC)/1,Comp.
	Limiters				
	Coolant system internal	Continuous	---	480	(BM,MM,TC)/1,Comp.
	Coolant system, external	274 (.75 yrs)	---	100(15)	(MV,TD)/1,Comp.
	Equipment status sensors	Continuous	---	200	(BM,MM,TC)/1,Comp.
	Primary cooling system				
	Reactor room coolant	274 (.75 yrs)	---	480(15)	(BM,MM,TC)/1,Comp.
	External coolant sensors	274 (.75 yrs)	---	95(15)	(MV,TD)/1,Comp.
	Blanket sensors	Continuous	---	9600	Blanket replacement
	Equipment status sensors	Continuous	---	600	(CM,MM,TC)/1,Comp.
	Closed coolant loop sensors	274 (.75 yrs)	---	2100(15)	(MV,TD)/1,Comp.
	Cryogenic system				
	Cryogen sensors	274 (.75 yrs)	---	665(15)	Hand tools, Comp.
	Equipment status sensors	Continuous	---	2550	Hand tools, Comp.
	Tritium processing system	Annual	---	850(15)	TD/1,Hand tools
	Water processing system	Annual	---	550(15)	(ABM,MV)/1,SE
	Structure	Continuous	---	4800	(BM,MM,TC)/1,SE
	Remote handling system				
	Equipment status sensors	Annual	---	950(15)	(BM,MM,TC)/1,SE
	Feedback & viewing sensors	Annual	---	150(15)	(BM,MM,TC)/1,SE

Table 19-14. Footnotes to Tables 19-12 and 19-13

(1) Periodic maintenance is conducted during the scheduled maintenance period defined in note (2) except for units not requiring reactor shutdown and not in reactor room.

(2) Assume operating time is 24 hours/day, 7 days/week, 274 days/calendar year = 273.75 (75% availability). Annual scheduled maintenance period is 28 days duration annually.

(3) Redundancy is expressed as the percentage of excess units over the units required. Where redundancy exists, failed items are replaced during scheduled shutdown.

(4) Scheduled down time excludes shutdown and startup; includes the time for the quantity maintained and an allowance for a producibility time factor of 1.25 for remote and 1.6 for contact maintenance.

(5) Critical maintenance requires immediate shutdown, delayed maintenance assumes replacement delayed until next maintenance shutdown.

(6) In general classes, component quantity is based on the number of the general items in the class. Items are not necessarily identical.

(7) Forced outage down time includes shutdown and startup time only for "Critical" failures (see notes). No fault isolation time included.

(8) Conducted in parallel with first wall/blanket sector replacement on non-interference basis.

(9) Replacement time is typical for each type of coil.

(10) Contact maintenance used.

(11) Unscheduled maintenance defined only for those components in reactor hall where remote maintenance is required.

(12) Asume using contact labor through glove boxes for systems in tritium facility. Time to purge glove box for replacement of large equipment included.

(13) Maintenance equipment failures result in extending scheduled downtime. Time given is for repair of equipment, not schedule delay.

(14) These systems are not broken down by component and are assumed to fail as a system.

(15) Assume sensor can be replaced without reactor shutdown. Assume many sensors require no calibration.

"none" is extended into the column. Reactor components are included in the list even though no scheduled maintenance is required to provide a comparison with unscheduled maintenance and to indicate the disposition of all items considered in this assessment.

- A brief description of the dominant scheduled maintenance action is given. In most cases this involves an inspection and/or test operation which is assumed to occur concurrently with the more complex and time consuming operations.
- The number of components that are required for a complete reactor are estimated. Numbers of unique components, such as blanket sectors are defined elsewhere in this study. However, for such items as valves and instruments, the quantity estimated applies to all sizes and types included in that subsystem. These estimates are approximate and serve only to indicate the magnitude of the effects of that component on the subsystem. Some general rules in estimating were followed. It was assumed, for example, that each valve and other component in a fluid system would be connected to the system by two mechanical (not welded) pipe connections. Therefore, the number of pipe connections is usually twice the sum of the other components.
- The redundancy level of each component is given individually as the percentage of excess components over those required to provide full reactor performance. Where redundancy is designed into a system, it is assumed to be installed to allow failures without shutting down the reactor. The redundancy level, even though small, is assumed to be sufficient to be inexhaustable before either the next scheduled shutdown or before a failed unit is replaced or repaired. In some cases, such as for crossed field amplifiers, this places requirements for rapid replacement of failed components. The unscheduled maintenance analysis indicates which components require rapid replacement.

In Table 19-13 the principal assumptions and groundrules include:

- The interval between scheduled maintenance actions is defined for each component in terms of the days of operation for that component. Since an availability of 75% is assumed, an annual maintenance

period occurs after 274 days (0.75 years) of operation and a requirement for maintenance every 6 years occurs after 1642 days (4.5 years) of operation. Where the component operates intermittently, the word "annual" is used when maintenance should be conducted during the scheduled yearly shutdown.

- The downtime for each maintenance action occuring during a scheduled maintenance period is given only for those components where scheduled maintenance must be conducted during a scheduled reactor outage. Most of the scheduled maintenance is on subsystems which are redundant or which employ surge devices so that the subsystem elements can be taken off line while the reactor is operating. The duration of these maintenance actions is not included in the downtime per maintenance action column. Since the scheduled maintenance shown is conducted during a scheduled outage, reactor shutdown and startup time is omitted from these estimates. The downtime estimates given are for maintenance of the quantity of components maintained during each outage as indicated in the following column. The quantity maintained simultaneously is indicated by the number of sets of maintenance equipment shown in the last column of the table. In most cases this is one set of equipment but occasionally two sets are used to maintain two components in a class at one time.
- The maintenance equipment used to conduct each maintenance action is indicated in the last column of the table. The titles of the major equipment items associated with the code are listed in Table 19-15. Since not all equipment items are defined, "SE" is used to indicate that Special Equipment is necessary for remote maintenance operations and "Hand Tools" covers a wide gamut of standard and special tools for contact maintenance. Where scheduled maintenance is required, the equipment applies to that maintenance activity. It would be similar for unscheduled maintenance unless the maintenance action is greatly different. Where scheduled maintenance is not required, the equipment indicated is required to conduct unscheduled maintenance operations on that component.

The total scheduled maintenance requirement must be determined by assuming that many maintenance actions are conducted at the same time. This

Table 19-15. Maintenance Equipment

	Short Title	Code
Coolant Line Handling Machine	CLHM	CL
Universal Remote Maintenance Vehicle (Monorail Manipulator)	URMV	MM
rf Duct Handling Machine	RDHM	RF
Transporter carriage	TC	TC
Blanket Sector Handling Machine	BSHM	BS
Shield Door Handling Machine	SDHM	SD
Bridge Manipulator	BM	BM
Auxiliary Bridge Manipulator (in Support Building)	ABM	ABM
600 Ton Heavy Bridge Crane	600TC	BC
Overhead Crane - General - Outside of Reactor Building	OC	OC
Turntable	TT	TT
Anti-torque Panel Handling Machine	APHM	AP
Monorail Switch	MRS	SW
Isolation Valve Removal Unit	IVRU	IV
First Wall Coating Machine	FWCM	CS
Special Equipment (Covers all other equipment not specified), i.e., Slings, handling equip. for crane, tools, special heads for cutting and welding, etc.	-	SE
Mobile Manipulator Vehicle	MMV	MV
Transporter (Cargo) Dollies	TD	TD
Lower Floor Light Duty Crane	LLDC	LC
Mobile Lift Truck	FL	FL
Hand Tools (for contact maintenance)	-	HT

current assessment only indicates the requirement for each component or subassembly. Because of the simultaneity of maintenance, the sum of the individual maintenance actions will far exceed the best downtime estimate. Determination of this scheduled downtime estimate requires an activity network analysis with resource allocation and must also include the impact of maintenance equipment failure modes and rates. Such an analysis is beyond the scope of the present study.

The elements of scheduled maintenance are all within the 28 day annual shutdown period, but several require a much longer shutdown at least once every ten years. In many cases, it is anticipated that machinery such as pumps should be overhauled after 5 years of continuous operation (1369 days at 75% availability). A longer shutdown is possibly required at this time unless these overhaul replacements can be staggered to occur during the annual shutdown or unless the system is made redundant to allow replacement with the reactor operating. The former assumption is made for this assessment.

19.3.6 Unscheduled Maintenance

Unscheduled maintenance items that force reactor shutdown are of utmost concern in reactor operation. Preplanned, scheduled maintenance operations are anticipated, have been designed to permit rapid component replacement, and utilize machines that have been designed for that specific replacement operation. Unscheduled maintenance operations that are anticipated, such as valve and pump replacement, can have a similar degree of preparation and be handled accordingly, the primary concern being the frequency of occurrence and effect on overall availability. Unscheduled failures of a more troublesome nature are the type that are not anticipated, but do happen. These failures will require multipurpose manipulators with a capability to do "human type" of repair. In these infrequent instances, it may be benefical to bring maintenance personnel into the building.

In order to achieve an overall plant availability of 75%, a 34 day per year allowance has been made for outages as a result of unscheduled maintenance for the reactor and its subsystems. The 34 day allocation has been divided among the major reactor subsystems in accordance with the expected time required to recover from an average failure of that subsystem and the ability of a subsystem to minimize its failure rate by use of redundancy.

An initial assessment of the expected unscheduled maintenance actions has been performed to provide insight into the relative downtime contributions of the individual reactor subsystem elements. A summary of expected unscheduled maintenance actions based on the same reactor component populations that are used for evaluation of scheduled maintenance in Table 19-12 and 19-13 is defined in Table 19-16.

The assumption and groundrules made in formulating this table are defined below and in the notes of Table 19-14. These assumptions and groundrules are:

- The impact of a component or subassembly, hereafter called component, on the reactor operation in the event of a failure of that component is indicated in the "Unscheduled Replacement Status" column. If the failure of one component in the class initiates a condition that requires a reactor shutdown or reduction in capacity, it is listed as a critical component. Such failures require an immediate shutdown and repair and the downtime for these forced outages is subtracted from the reactor availability.
- If the failure of a component does not require a shutdown immediately because it has no direct impact on the reactor capacity but requires a reactor shutdown to make the repair, it is placed in the "delayed" unscheduled maintenance category. These repairs are made at the next reactor shutdown, in parallel with either the repair of another component during a critical forced outage or a scheduled shutdown. No forced outage downtime is charged against availability for these component failures. Some of these failures are valve failures and the failure of other components which could be serious. However, the assumption is made that a seal leak in a valve, for example, is small and results in a small spill which can be dealt with during the next shutdown.
- If a component failure can be repaired with the reactor operating or if it is in a redundant system, it is classified as non-critical and no reactor forced outage is assumed to occur. This groundrule

Table 19-16. STARFIRE Unscheduled Maintenance Downtime Estimates
(By Component or Subassembly)

Account Number	Replaceable Component (Subassembly)	Unscheduled Replacement Status(5)	Assumed Dominant Failure Mode of Component/Assembly	Estimated Forced Outage Frequency/Unit Outages Oper. Yr	Downtime Per Forced Outage, Days
22.01 -					
.01	First wall/blanket system				
	13.7° Sector (A)	Critical	First wall leak	.04	9.7
	16.3° Sector (B)	Critical	First wall leak	.04	10.7
	Blanket coating	Critical	First wall leak	.10	13.5
	Limiters	Critical	Coolant Leak	.01	SEE FW/B
.02	Shield				
	Shield door	Critical	Vacuum seal leak	.04	9.5
	Vacuum pump shield (pod)	Delayed	Coolant/Vacuum seal, leak in shield	.01	2.0
	Vacuum duct shield	Delayed	Coolant/vacuum leak in shield	.005	6.0
	RF & ECRH duct shield	Delayed	Coolant leak in shield	.005	1.4
	Fuel injection shield	Delayed	Coolant leak in shield	.005	1.4
	Cooling line shields	Delayed	Coolant leak in shield	.005	1.4
.03	Magnets				
	TF coils	Critical	Cold mass leak/conductor short	.0005	287
	EF coils/OH coils, upper, external	Critical	Cold mass leak/conductor short	.004	107(9)
	EF coils/OH coils, lower, external	Critical	Cold mass leak/conductor short	.004	152(9)
	CF coils (lower inboard)	Critical	Coolant leak	.0005	211(9)
	OH coils/EF coils in core	Critical	Cold mass leak/conductor short	.004	105(9)
.04	RF heating and current drive				
	Cross field amplifiers	Noncritical	Electrode burnout	.10	.4(10)
	Wave guide, blanket section	Critical	Coolant/vacuum leak inside shield	.005	11.0
	Wave guide, bundle B	Delayed	Connector seal leak	.03	2.2
	Wave guide, distribution	Critical	Freon leak	.0001	1.0
	Phase shifter	Noncritical	Motor drive inoperative	.10	.4(10)
	Circulator/directional coupler	Noncritical	Freon leak	.0001	1.0
	Window Assembly	Delayed	Window seal failure	.003	2.2
	Grill	Delayed	Grill failure	.01	2.2
	SF_6 supply lines and valves	Noncritical	Valve seal leak to room	.0003	.2(10)
.05	Primary structure support				
	Reactor centerpost	Critical	Not included in analysis	---	---
	Reactor support structure	Critical			
	Antitorque panels	Critical	Pinned connection failure	.0002	6.5
	Equipment support structure	Critical	Crack in structure	.0001	60
	Centerpost support struts	Critical	Excessive thermal leak	.0001	60

Table 19-16. STARFIRE Unscheduled Maintenance Downtime Estimates (Cont'd)
(By Component or Subassembly)

Account Number	Replaceable Component (Subassembly)	Unscheduled Replacement Status(5)	Assumed Dominant Failure Mode of Component/Assembly	Estimated Forced Outage Frequency/Unit Outages Oper. Yr	Downtime Per Forced Outage, Days
22.01 - .06	Reactor vacuum system				
	Plasma Chamber System				
	Cryosorption pumps	Delayed	Plugged Molecular sieve	.02	2.7
	Cryopump regeneration values	Delayed	Valve actuator mechanism	.15	1.6
	Cryopump isolation valves	Critical	Valve seal leak	.0003	2.7
	Roughing pumps/motors	Noncritical	Seal leak	.14	1.9
	Roughing regeneration valves	Delayed	Valve actuator mechanism	.15	1.6
	Equipment isolation valves	Critical	Valve seal leak	.0003	1.6
	Roughing vacuum lines	Critical	Connection leak at values/equip.	.003	1.6
	Traps	Critical	Plugged trap	.01	1.6
	Magnet dewar system				
	Roughing pumps/motors	Noncritical	Seal leak	.14	1.9
	Equipment isolation valves	Delayed	Valve actuator mechanism	.15	1.6
	Roughing vacuum lines	Critical	Connection leak at valves/equip.	.003	1.6
	Traps	Critical	Plugged trap	.01	1.6
	Tritium facility vacuum				
	See 22.05, 22.06	---	---	---	---
	Radwaste system				
	See 22.04	---	---	---	---
.07	Power supply and switching				
	ECRH plasma breakdown				
	High voltage switch gear	Critical	Will not operate	.006	1.8(10)
	High voltage transformer	Critical	Burnout	.004	2.0(10)
	High voltage rectifier	Critical	Burnout	.004	2.0(10)
	Crowbar	Critical	Will not operate	.006	1.8(10)
	Regulator	Critical	Out of tolerance	.20	2.0(10)
	Low voltage distribution	Critical	Connector interrupt	.0000127	2.0(10)
	Low voltage switchgear	Critical	Will not operate	.006	1.8(10)
	Controls	Critical	Will not operate	.09	1.8(10)
	RF heating and current drive				
	Power supply system	Critical	Out of tolerance	.04	1.8(10)
	TF Magnets				
	Power supply system	Critical	Out of tolerance	.04	1.8(10)
	Dump resistor system	Delayed	Out of limits, distortion	.04	1.8(10)
	EF Magnets				
	Power supply system	Critical	Out of tolerance	.04	1.8(10)
	Dump resistor system	Delayed	Out of limits, distortion	.04	1.8(10)
	OH Magnets				
	Power supply system	Critical	Out of tolerance	.04	1.8(10)
	Dump resistor system	Delayed	Out of limits, distortion	.04	1.8(10)
	CF Magnets				
	Power supply system	Critical	Out of tolerance	.04	1.8(10)
	Switch gear sets	Critical	Will not operate	.006	1.8(10)
	Uninterruptable power system	Noncritical	Diesel won't operate	0.33	1.0(10)

Table 19-16. STARFIRE Unscheduled Maintenance Downtime Estimates (Cont'd)
(By Component or Subassembly)

Account Number	Replaceable Component (Subassembly)	Unscheduled Replacement Status(5)	Assumed Dominant Failure Mode of Component/Assembly	Estimated Forced Outage Frequency/Unit Outages Oper. Yr	Downtime Per Forced Outage, Days
22.01 - .09	ECRH Plasma breakdown				
	Gyrotrons	Noncritical	Internal arcing, vacuum decay	5.0	.8(10)
	Gyrotron mount assemblies	Noncritical	Cooling system failure	.1	1.0(10)
	Wave guides (bundle B, 22.01.04)	Noncritical	Window seal failure	.003	2.2
22.02 - .01	Main heat transfer systems				
	Primary coolant system				
	Primary coolant pumps/motors	Critical	Seal leak	.14	3.0
	PC Line connections/mounts	Delayed	Connector seal leak	.003	3.8
	Coolant line bundle A	Delayed	Connector seal leak	.10	2.6
	PC flow control valves	Critical	Actuator failure	.011	3.0
	PC equipment isolation valves	Critical	Value seal leak	.0003	3.0
	Drain valves	Delayed	Value seal leak	.0003	1.9
	Purge/relief valves	Delayed	Value seal leak	.0003	2.6
	Purge line connection	Delayed	Connector seal leak	.003	2.5
	Steam generators	Noncritical	Tube leak	.164	2.5
	Primary coolant reservoir	Noncritical	Tank leak	.0003	2.5
	PC sump pump	Delayed	Seal leak	.14	1.9
	PC loop pressurizers	Critical	Spurious operation	.20	3.8
	Cleanup filters	Delayed	Plugged filter	.02	1.9
	Cleanup system valves	Delayed	Valve seal leak	.0003	1.9
.03	Limiter cooling system				
	Limiter coolant pumps/motors	Critical	Seal leak	.14	3.0
	LC line connections/mounts	Delayed	Connector seal leak	.003	3.8
	LC flow control vlaves	Critical	Actuator failure	.011	3.0
	Equipment isolation valves	Critical	Valve seal leak	.0003	3.0
	Feedwater heat exchangers	Noncritical	Tube leak	.164	2.5
	Coolant reservoir	Noncritical	Tank leak	.0003	2.5
	LC loop pressurizer	Critical	Spurious Operation	.20	3.8
	Cleanup filters	Delayed	Plugged filter	.02	1.9
	Cleanup system valves	Delayed	Valve seal leak	.0003	1.9
.04	Residual heat cooling system				
	Residual heat loop pumps/motors	Critical	Seal leak	.14	3.0
	RH line connections/mounts	Critical	Connector seal leak	.003	3.8
	Residual heat loop valves	Critical	Valve seal leak	.0003	3.0
	RH loop heat exchangers	Noncritical	Tube leak	.164	2.5
22.03 - .01	Cryogenic cooling system				
	He refrigerator/liquefier	Noncritical	Internal valve seal leak	.30	4.5(10)
.02	LHe transfer/storage				
	LHe storage dewar	Noncritical	Seal leak	.0003	4.5(10)
	LHe dewar pumps	Critical	Seal leak	.14	1.0(10)
	LHe line connections/mounts	Delayed	Connector seal leak	.003	2.5
	LHe flow control valves	Critical	Valve seal leak	.0003	3.0

Table 19-16. STARFIRE Unscheduled Maintenance Downtime Estimates (Cont'd)
(By Component or Subassembly)

Account Number	Replaceable Component (Subassembly)	Unscheduled Replacement Status(5)	Assumed Dominant Failure Mode of Component/Assembly	Estimated Forced Outage Frequency/Unit Outages Oper. Yr	Downtime Per Forced Outage, Days
22.03 -					
.03	GHe transfer/storage				
	GHe storage tanks	Noncritical	Connection seal leak	.003	1.0(10)
	GHe compressors	Critical	Seal leak	.14	1.0(10)
	Oil removal systems	Critical	Seal leak	.003	1.0(10)
	Warm GHe line connections/mounts	Delayed	Connection seal leak	.003	1.9
	Cold GHe line connections/mounts	Noncritical	Connection seal leak	.003	1.0(10)
	GHe equipment isolation valves	Noncritical	Valve seal leak	.0003	.5(10)
.04	LN_2 system				
	Nitrogen liquefaction system	Noncritical	Valve seal leak	.03	3.0(10)
	LN_2 storage dewar	Noncritical	Connection seal leak	.003	1.0(10)
	LN_2 + GN_2 line connections/mounts	Delayed	Connection seal leak	.003	1.9
	LN_2 flow control valves	Delayed	Valve seal leak	.0003	1.9
	N_2 equipment isolation valves	Noncritical	Valve seal leak	.0003	1.9
	N_2 supply storage tanks	Noncritial	Connection seal leak	.003	1.0
22.04 -	Radioactive waste treatment				
.01	Liquid waste storage				
	Surge tanks	Noncritical	Connection seal leak	.003	2.5
	Pumps/motors	Noncritical	Seal leak	.14	1.9
	Mixer	Noncritical	Seal leak	.14	1.9
	Filters	Noncritical	Plugged filter	.02	1.9
	Condensor	Noncritical	Tube leak	.16	2.5
	Separators (ion exchange)	Noncritical	Ruptured exchange media	.01	2.6
	Separators (absorbers)	Noncritical	Plugged absorber bed	.02	2.6
	Piping connections/mounts	Noncritical	Connection seal leak	.003	2.5
	Valves/traps	Noncritical	Valve seal leak	.0003	1.9
	Electrolysis units	Noncritical	Connection seal leak	.003	2.5
.02	Gaseous waste processing system				
	Compressors	Noncritical	Seal leak	.14	1.9
	Separators (molecular sieve)	Noncritical	Plugged sieve	.02	1.9
	Condensors	Noncritical	Tube leak	.16	2.5
	Pumps/motors	Noncritical	Seal leak	.14	1.9
	Filters	Noncritical	Plugged filter	.02	1.9
	Piping connections/mounts	Noncritical	Connection seal leak	.003	2.5
	Valves/dampers	Noncritical	Valve seal leak	.0003	1.9
	Heat exchangers	Noncritical	Tube leak	.16	2.5
	Blowers	Noncritical	Fatigue failure	.07	1.9
	Storage tanks	Noncritical	Connection seal leak	.003	2.5

Table 19-16. STARFIRE Unscheduled Maintenance Downtime Estimates (Cont'd)
(By Component or Subassembly)

Account Number	Replaceable Component (Subassembly)	Unscheduled Replacement Status(5)	Assumed Dominant Failure Mode of Component/Assembly	Estimated Forced Outage Frequency/Unit Outages Oper. Yr	Downtime Per Forced Outage, Days
22.04 - .03	Solid waste processing equipment				
	Dryers	Noncritical.	Heaters fail to operate	.2	2.0
	Handling system (conveyors)	Noncritical	Drive failure	.2	2.0
	Classification system	Noncritical	Jammed mechanism	.2	2.0
	Compactor/cutter	Noncritical	Jammed mechanism	.2	2.0
	Mixer/solidifier	Noncritical	Seal leak	.14	1.9
	Storage system	Noncritical	Compacted waste handling equipment	.2	2.0
	Transport casks	Noncritical	Environment monitoring devices	.1	.5(10)
22.05 - .01	Tritium facility systems				
	Fuel purification systems				
	Fuel cleanup unit (Catalytic oxidizers, electrolysis)	Noncritical	Flow control failure	.011	1.0(12)
	Blanket Recovery Units (He separator, ion exchange, electrolysis)	Critical	Unit fails to operate	.10	2.5
	Surge tanks	Noncritical	Connection seal leak	.003	1.0(12)
.03	Fuel preparation system				
	Fuel blenders (Mixing tanks, valves, pumps)	Noncritical	Pump seal leak	.14	1.0(12)
.04	Fuel inspection system				
	Fuel gas puffer	Delayed	Valve actuator failure	.15	1.6
	Plasma Guns	Delayed	Switching failure	.006	1.6
	Distribution system	Critical	Connection seal leak (25 connections)	.08	1.6
.05	Fuel storage				
	D_2 supply storage	Noncritical	Valve seal leak	.0003	.8(10)
	DT storage	Noncritical	Valve seal leak	.0003	1.0(12)
	T_2 storage	Noncritical	Storage vault leak	.003	1.0(12)
.06	Tritium extraction and recovery				
	Tritium waste treatment unit	Noncritical	Unit fails to operate	.19	1.0(12)
	Tritiated water recovery unit (Ion exchange, catalysis, electrolysis)	Noncritical	Flow control failure	.011	1.0(12)
	Isotope separation unit (Distillation Cascade)	Noncritical	Flow control failure	.011	1.0(12)
	Detritiated gas storage	Noncritical	Valve seal leak	.0003	1.0(12)
	He storage	Noncritical	Valve seal leak	.0003	1.0(12)
	Tritiated waste storage	Noncritical	Valve seal leak	.0003	1.0(12)
	Gas compressors	Noncritical	Seal leak	.14	1.2(12)
	Transfer pump unit	Noncritical	Seal leak	.14	1.2(12)
	Transfer line connections	Noncritical	Connection seal leak	.003	1.0(12)
	Transfer line valves	Noncritical	Valve seal leak	.0003	1.0(12)

Table 19-16. STARFIRE Unscheduled Maintenance Downtime Estimates (Cont'd)
(By Component or Subassembly)

Account Number	Replaceable Component (Subassembly)	Unscheduled Replacement Status(5)	Assumed Dominant Failure Mode of Component/Assembly	Estimated Forced Outage Frequency/Unit Outages Oper. Yr	Downtime Per Forced Outage, Days
22.05 - .07	Atmosphere tritum recovery system				
	Atmosphere cleanup units (Catalytic oxidation, mol. sieves)				
	Reactor building	Delayed	Control failure	.011	2.5
	Hot cells	Noncritical	Control failure	.011	2.5
	Tritium facility	Noncritical	Control failure	.011	1.0(12)
22.06 - .01	Maintenance equipment				
	Facility remote handling equip:				
	Cranes				
	Reactor room	Noncritical	Drive failure	.14	3.0(13)
	Hot cells	Noncritical	Drive failure	.14	6.0(13)
	Tritium facility	Noncritical	Drive failure	.14	2.0(10)
	Bridge manipulators				
	Reactor room	Noncritical	Electrical control failure	.50	3.0(13)
	Hot cells	Noncritical	Electrical control failure	.50	6.0(13)
	Turntables	Noncritical	Drive failure	.07	6.0(13)
	Monorail switches	Noncritical	Drive failure	.14	3.0(13)
	Monorail	Noncritical	Power bus failure	.50	5.0(13)
	Airlock Systems	Noncritical	Door system failure	.14	3.0(13)
	Mobile remote handling equipment				
	Coolant line removal machine	Noncritical	Activator failure	.45	3.8(13)
	Transport carraige	Noncritical	Drive failure	.07	4.0(14)
	Antitorque panel handling machine	Noncritical	Activator failure	.45	3.8(13)
	Shield door handling machine	Noncritical	Activator failure	.45	3.8(13)
	Blanket sector handling machine	Noncritical	Activator failure	.45	3.8(13)
	First wall coating machine	Noncritical	Drive failure	.42	4.0(13)
	Isolation valve removal unit	Noncritical	Electrical control failure	.50	3.3(13)
	Universal remote maintenance vehicle	Noncritical	Electrical control failure	.50	3.3(13)
	Mobile manipulator vehicle	Noncritical	Electrical control failure	.50	3.3(13)
	Hot cell remote handling equipment	Noncritical	Drive failure	.49	6.3
	Hot cell equipment	Noncritical	Control failure	.50	5.0
.02	Special heating systems				
	Coolant startup heating	Noncritical	Element control failure	.50	2.5(13)
	Pressurizer heaters	Noncritical	Control failure	.05	2.5(13)
.03	Coolant makeup systems (14)				
	Raw water makeup system	Noncritical	Seal leak	.14	3.0(10)
	Demineralized water system	Noncritical	Connector seal leak	.003	1.0(10)
	Primary cooling water makeup	Noncritical	Seal leak	.14	3.0(10)
	PC water additive system	Noncritical	Connector seal leak	.003	1.0(10)

Table 19-16. STARFIRE Unscheduled Maintenance Downtime Estimates (Cont'd)
(By Component or Subassembly)

Account Number	Replaceable Component (Subassembly)	Unscheduled Replacement Status(5)	Assumed Dominant Failure Mode of Component/Assembly	Estimated Forced Outage Frequency/Unit Outages Oper. Yr	Downtime Per Forced Outage, Days
22.06 - .04	Gas systems (14)				
	Instrument air system (Compressors, filters, tanks, valves)	Noncritical	Compressor failure	.14	1.0(10)
.05	Inert atmosphere system (14)				
	Reactor building	Noncritical	Compressor failure	.14	1.0(10)
	Hot cells	Noncritical	Compressor failure	.14	1.0(10)
	Pressure control system	Noncritical	Valve actuator failure	.15	.5(10)
	Gas storage system	Noncritical	Valve seal leak	.0003	.8(10)
	Penetrations	Noncritical	Penetration leak	.002	1.6
.06	Leak detection system (14)				
	Auxiliary vacuum system	Noncritical	Seal leak	.15	1.9
.07	Closed loop coolant system				
	Cooling water pumps	Delayed	Seal leak	.14	3.0
	Cooling water heat exchangers	Noncritical	Tube leak	.164	2.5
	Surge tank	Noncritical	Tank leak	.0003	2.0(10)
	Building heat exchangers				
	Reactor building	Delayed	Tube leak	.0003	2.5
	Tritium reprocess and storage	Noncritical	Tube leak	.0003	1.5(12)
	Electrical equipment	Noncritical	Tube leak	.0003	1.0(10)
	RF power supply	Delayed	Tube leak	.0003	1.0(10)
	Hot cells	Noncritical	Tube leak	.0003	2.5
	Atmospheric tritium clean up	Delayed	Tube leak	.0003	2.5
	Waste processing	Noncritical	Tube leak	.0003	2.5
	Distribution lines (connections)				
	Reactor room	Delayed	Connector seal leak	.003	3.8
	Vacuum pump cooling, etc.	Noncritical	Connector seal leak	.003	1.0
	Valves				
	Shielding	Delayed	Valve seal leak	.0003	3.0
	CF coils	Delayed	Valve seal leak	.0003	3.0
	Vacuum pumps, heat exchange	Noncritical	Valve seal leak	.0003	1.0
.08	Standby cooling system (14)	Noncritical	Fail to operate	.15	1.0(10)
22.07	Instrumentation & Control				
.01	Reactor I & C equipment				
	Equipment control devices	Critical/25	Fail to respond to signal	.011	1.9
	Microprocessors	Delayed	Out of tolerance	.10	2.5
	Control processor	Delayed	Out of tolerance	.10	2.5
	Plasma diagnostics	Delayed	Out of tolerance	.15	4.0
	Remote access controllers	Noncritical	Fail to operate	.15	3.3

Table 19-16. STARFIRE Unscheduled Maintenance Downtime Estimates (Cont'd)
(By Component or Subassembly)

Account Number	Replaceable Component (Subassembly)	Unscheduled Replacement Status(5)	Assumed Dominant Failure Mode of Component/Assembly	Estimated Forced Outage Frequency/Unit Outages Oper. Yr	Downtime Per Forced Outage, Days
22.07 - .02	Monitoring systems				
	Facility computer	Noncritical	Spurious operation	3.0	.2(10)
	Master timer	Noncritical	Spurious operation	1.0	.2(10)
	Master control console	Noncritical	Spurious operation	3.0	.2(10)
	Safety and interlock system	Noncritical	Interlock device contact failure	.1	1.9
	Remote access communications	Noncritical	Transfer failure	.1	3.3(13)
	Remote access control system	Noncritical	Fail to respond to signal	.1	3.3(13)
.03	Instrumentation sensors				
	Magnet sensors				
	Internal	Noncritical	Spurious signal, replace with magnet	.016	287
	External (accessible)	Noncritical	Spurious operation	.016	1.6
	Power supplies	Noncritical	Spurious operation	.016	.05(10)
	RF system sensors				
	Amplifier sensors	Noncritical	Spurious operation	.016	.05(10)
	Distribution system, internal	Noncritical	Spurious signal	.016	4.0
	Distribution system, external	Noncritical	Spurious operation	.016	.05(10)
	Power supplies	Noncritical	Spurious operation	.016	.05(10)
	ECRH system sensors				
	Gyrotron sensors	Noncritical	Spurious operation	.016	.05(10)
	Distribution system, internal	Noncritical	Spurious signal	.016	4.0
	Distribution system, external	Noncritical	Spurious operation	.016	.05(10)
	Power supplies	Noncritical	Spurious operation	.016	.05(10)
	Vacuum system sensors				
	Vacuum sensors	Noncritical	Filament burnout	.016	1.6
	Equipment status sensors	Noncritical	Spurious operation	.016	1.6
	Limiters				
	Coolant system, internal	Noncritical	Spurious signal	.016	4.0
	Coolant system, external	Noncritical	Spurious operation	.016	.3
	Equipment status sensors	Noncritical	Spurious operation	.016	1.6
	Primary cooling system				
	Reactor room coolant	Noncritical	Spurious operation	.016	1.6
	External coolant sensors	Noncritical	Spurious operation	.016	.3
	Blanket sensors	Noncritical	Spurious signal	.016	12.6
	Equipment status sensors	Noncritical	Spurious operation	.016	1.6
	Closed coolant loop sensors	Noncritical	Spurious operation	.016	.3
	Cryogenic system				
	Cryogen sensors	Noncritical	Spurious operation	.016	.05(10)
	Equipment status sensors	Noncritical	Spurious operation	.016	.05(10)
	Tritium processing system	Noncritical	Spurious operation	.016	.5(12)
	Water processing system	Noncritical	Spurious operation	.016	1.6
	Structure	Noncritical	Spurious signal	.016	10.0
	Remote handling system				
	Equipment status sensors	Noncritical	Spurious operation	.016	3.3(13)
	Feedback & viewing sensors	Noncritical	Spurious operation	.016	3.3(13)

implies that insufficient failures will occur to exhaust the redundancy or that another failure will not occur before maintenance is completed. This assumption usually can be strengthened by increasing the redundancy of a system or by adding redundancy where none exists. Table 19-12 indicates the level of redundancy in each system.

- The assumed dominant failure mode for each component was selected as a basis for estimating the downtime required for maintenance of the component. This is the forced outage downtime in all cases, even for delayed or non-critical items. In the cases where the reactor must shut down for repair, i.e., the critical delayed outages, the downtimes include time for reactor shutdown and startup.
- The assumed failure mode is also used to estimate the equipment required as shown in Table 19-13 when no scheduled maintenance is required, and to serve as the basis for the relative failure rate estimates.
- The allowable failure rates are determined by first estimating a failure rate for each component. This provides a set of relative values for the components. The total forced outage downtime for each component is then computed and the total forced outage downtime for all critical components is compared with the allowable total to achieve a 75% availability. The failure rates are then prorated to the allowable value. These failure rates can be compared with theoretical or empirical data to determine the impact on a research and development program for each component. For this study, computations are highly simplified to give only an approximate value as requirement.

In making the estimates for individual components, many other assumptions follow.

- The downtime estimates for magnet repair vary significantly with the location of the magnets, even within a class. Therefore, estimates were made for the TF coil replacement, the upper superconducting EF/OH coils, the lower outboard superconducting EF coil, the upper coil set in the reactor centerpost and the lower inboard CF coil.

These downtimes are deemed representative, even though some of the coils excluded are more difficult and some, like the remaining CF coils, are expected to be less difficult. For the CF coils, it was assumed that they are made up of 12 segments and that only 2 segments were replaced to make the repair. In all magnet replacements, it is assumed that replacement magnets can be made available when required. The TF coils will be brought into the reactor building through a construction door.

- Unscheduled maintenance, like scheduled maintenance, employs contact maintenance wherever possible. The estimates where contact maintenance is assumed are indicated by the footnote in Table 19-16.
- Structure is considered to last the life of the reactor and, therefore, is generally omitted from maintainability analyses. However, some potential failure modes exist and the estimated failure rate and downtime were included.
- Several piping and cable lengths are roughly approximated to determine their relative influence. However, most piping failures are expected at mechanical connections and this is considered a better indicator of the component failures.
- The tritium facility systems were assumed capable of being shut down without influencing the reactor if the repair time did not exceed the capability of intermediate storage units or surge tanks to store the flow from the reactor. Therefore, very few of the assumed components of these systems are considered critical to reactor operation. Those which appear to be critical could possibly be made non-critical by use of redundant components. Also, in the tritium systems, contact maintenance through glove boxes is defined as a baseline. The time for this maintenance exceeds that of direct contact maintenance but is less than fully remote maintenance. Special provisions are made for replacement of heavy equipment through the glove box.
- Maintenance equipment failures are classified non-critical since they are only important when conducting maintenance and the reactor is already shut down. However, each failure adds to the total downtime.

The failure rates given for the operating year only apply to the time in use for this equipment. Therefore, the effective rate is much less than indicated. The approximate repair times are the time required to return the equipment to operable condition and include the time to extract it from the failed condition. Therefore, the extension of downtime for the reactor which results from such breakdowns is less than indicated in the table.

The overall unscheduled reactor downtime estimate can be derived from Table 19-16 and Table 19-12 by summing the products of availability (75%), number of components in class (Table 19-12), the estimated forced outage frequency (Table 19-16) and the downtime per forced outage (Table 19-16) for each of the critical items. Critical items are those components where failure would result in immediate reactor shutdown. The results of this summation are given in Table 19-17, and indicate how many days of unscheduled outage is attributed to each system. The failure rate data is taken from historical data where possible and applied to the subsystems as thought appropriate. The failure rate numbers are thought to be representative of current systems, the major uncertainty being in the assumptions of which component failures are critical versus those that can be delayed.

The average downtime per year is distributed so that components, such as the first wall/blanket that do not have redundancy or components with the capability for inservice repair, require more downtime. A possible exception is the heat transport system where pump and motor failures account for approximately one-half of the outage time. This result indicates that further consideration should be given to the choice of redundant (three 50% capacity) pumps since 2.5 days outage per year can likely pay for the extra pumps.

Both the forced outage and the scheduled downtime requirements derived from Tables 19-16 and 19-13 can be further used to define manpower requirements for maintenance and for comparison with the requirements for other plants. However, the most effective method for defining personnel requirements is to use an activity network analysis with resource allocation and probabilistic failure modes. Also, the time requirements for refurbishment of replaced components should be included to complete the analysis. These

Table 19-17. Summary of Unscheduled Maintenance Downtimes for Critical Maintenance Items

Subsystem	Average Downtime Per Year (days)	Redundancy	In Service Repair Capability
(1) First Wall/ Blanket System	10.15	None	No
(2) Shield	3.4	Seals	No
(3) Magnets	6.4	None	No
(4) rf System	0.49	Yes	Yes
(5) Primary Structures	0.15	Yes	No
(6) Vacuum system	1.8	Pumps & Valves	No
(7) Power Supplies	3.43	Yes	Yes
(8) Heat Transport System	5.18	Partial	Limited
(9) Cryogenics-LHe	1.22	Yes	Yes
(10) Tritium system	0.84	Yes	Yes
(11) Instrumentation & Control	0.94	Yes	Yes
TOTAL	34.		

procedures would establish a more complete evaluation of the impacts of various design concepts on the cost of maintenance.

19.3.7 Recommendations

If the desired objectives for plant availability and personnel radiation exposure outlined for STARFIRE are to be met, development of the reactor maintenance system must proceed along with the reactor design to assure that adequate provisions are made for maintenance. Additionally, extensive development of remote maintenance equipment and associated technologies must be undertaken simultaneously with other reactor subsystems development because it represents an important development effort. Simplification of the maintenance methods and procedures must be continually assessed as the design evolves. Areas for further development and investigation in the near term are the following.

Subsystem Modules -- Further definition is required for the individual subsystem modules so that the maintenance tasks and procedures required for servicing the modules and their subcomponents can be defined. Areas requiring development are the module hold down fixtures, utility couplings, and subcomponent layout within the modules. Change out procedures for the whole module as well as for smaller subcomponents require attention to insure adequate space for full remote maintenance. Modules and subcomponents should be standarized as much as possible.

Trapped EF Coil -- Lower EF-coil repair and replacement (without total disassembly of the reactor) is presently handled by storing trapped spare coils, built into the reactor, so that the failed coil can be cut away and a new coil lifted into place. Development of special machinery to perform the cutting, removal and replacement will be needed. In addition, adequate space for coil storage, failed coil removal and retrieval of the replacement coil will be required. Other alternative methods of coil replacement should be explored. Spare coils can be stored next to operating coils. If a failure occurs, power from the failed coil can be switched to the spare coil. Actuators may be needed to move the spare coil into operating position if field errors due to differences in coil location are not acceptable. This would eliminate the need to cut and remove the failed coil.

Duct Joints -- Coolant line quick disconnects suitable for remote operation are desirable. These can be standarized with other piping disconnects in the plant to reduce tooling requirements and operations needed to couple and uncouple the lines.

The coolant line handling machine, rf duct handling machine and the isolation valve handling unit all need further conceptual development. Considerations include: loads to be handled, location of the specific task to be performed with respect to the monorail, and the amount of support needed by the universal remote maintenance machine.

Coating -- Remote blanket beryllium coating is not well understood to date. Further development with regard to coating requirements, including coating life, coating adhesion and coating methods are required.

Maintenance Equipment -- Development of maintenance equipment should be continued to provide information on realistic capabilities that can be provided so that subsystem designs evolve that can be maintained.

A monorail service cart which would support personnel access to the reactor building should be considered. The cart could provide power, water, service air, breathing air, inert gas, tools, and equipment needed for emergency repair.

Monorail parking and maneuvering logistics to ensure access of maintenance machines to the reactor, to the support system modules, and to the hot cell require further investigation.

Building Layout -- The reactor building basement layout including the service gallery for the reactor requires development to define the features and functions for the mobile servo-manipulator as well as to define personnel access requirements. Further definition of the requirements and benefits of the shield wall between the reactor and subsystem modules is required.

Hot Cell -- The hot cell layout details have not been worked out to date. Considerations include the functions of each area, crane coverage, servo-manipulators needed, viewing, and the monorail turntables. Overhead

crane coverage for the decontamination chamber and the central corridor might also be desirable.

Laydown Space -- A study of all anticipated shutdown outage operations should be performed to verify that adequate laydown space is provided in both the reactor building and hot cell to support necessary operations. A substantial amount of floor space has been provided at the air lock end of the reactor building for laydown and equipment storage. Storage rack and laydown fixtures would also be required.

Failure Recovery -- Equipment features which allow recovery from anticipated failures have not been identified. Logistics of recovering failed equipment and for preventing further damage from an equipment failure will require further investigation.

Hot Cell Storage -- The hot cell can be designed to provide storage for an indefinite period of time, including the 40 year design life of the plant. Interim storage could be provided as an alternate with onsite storage outside of the hot cell or offsite disposal. It has been assumed that onsite storage for 40 years will be provided for all solid or solidified plant waste material in the initial design. Whether this storage will be in the hot cell itself or a combination of in-cell and out-of-cell storage has not been resolved.

Spare TF Coil -- A spare TF coil inside the reactor building would reduce the time required to change out a TF coil in the very unlikely event of a serious TF coil failure. Whether or not a spare TF coil is justified will depend on the magnet reliability and economic considerations associated with TF coil failure.

Availability Assessment -- More detailed design definition of the total systems, including failure rate and life data, maintenance equipment and reactor components, is required to permit an accurate assessment. Continued attention to this area is required to assure that reasonable goals are being set for subsystems and that designs are including appropriate redundancies and design margins.

19.4 PERSONNEL REQUIREMENTS

The plant requires a total crew of 163 people from which a minimum of 28 are required on each of the 5 shifts. Eighteen additional personnel are required on the first shift where most clerical and on-line maintenance operations are performed. The assumed distribution of personnel is given in Table 19-18. During major balance-of-plant maintenance operations such as turbine overhaul, or a large unscheduled reactor maintenance operation such as magnet replacement, specialized crews will be used to assist the regular plant maintenance crew.

Table 19-18. STARFIRE Power Plant Personnel

Staff Position Title	Number of Employes
Superintendent's Office	
Plant Superintendent	1
Assistant Superintendent	1
Secretary	1
Operations	
Operations Supervisor	1
Shift Supervisor	5
Senior Control Room Operator	5
Control Room Operator	10
Equipment Operator	10
Maintenance Equipment Operator	10
Equipment Attendant	5
Maintenance	
Maintenance Supervisor	1
Mechanical Foreman	1
Electrical Foreman	1
Instrument Foreman	1
Mechanic	5
Mechanic's Helper	5
Welder	4
Machinist	4
Electrician	5
Electrician's Helper	4
Instrument Mechanic	10
Instrument Helpers	5
Computer Technician	3
Maintenance Equipment Mechanic	6

Table 19-18. STARFIRE Power Plant Personnel (Continued)

Staff Position Title	Number of Employes
Techanical	
Technical Supervisor	1
Plant Engineer	1
Assistant Plant Engineer	1
Instrument Engineer	2
Nuclear Engineer	2
Computer Specialist	2
Systems Analyst	1
Maintenance Specialist	1
Health Physicist	1
Chemist	1
Laboratory and Instrument Technicians	8
Clerical and Services	
Clerical and Services Supervisor	1
Bookkeepers	3
Typist	4
Storekeeper	2
Clerk	5
Data Management Specialist	1
Yardman	2
Janitor	7
Handyman	3
Guard	10
Total No. of Employes	163

References

1. Masche, G., Systems Summary of a Westinghouse Pressurized Water Reactor Nuclear Power Plant, August 1973.

2. Nuclear News, Vol. 19, No. 3, Mid Februrary, 1976, p. 37.

3. Nuclear Safety, Vol. 18-1, 1977, p. 100.

4. Fusion Reactor Remote Maintenance Study, EPRl-ER-1046, Westinghouse Electric, April 1979.

5. John Hilton, Report From the Assembly Line, Newsweek, June 30, 1980.

6. Mitchell, J.T.D. Blanket Replacement in Toroidal Fusion Reactors. Invited Paper at ANS 3rd Topical Meeting on Technology of Controlled Nuclear Fusion, Santa Fe, p. 954, 1978.

7. Fuller, G. M., Developing Maintainability for Tokamak Fusion Power System, 600-4184-6, McDonnell-Douglas Astronautics Company, Nov. 1978.

8. GAC-ANL TNS Scoping Studies, Plasma Chamber, GA-A14614, General Atomic Company, October 1977.

9. Dylla, H. F. et al, Observations of Changes in Residual Gas and Surface Composition With Discharge Cleaning in PLT, PPPL-1485, Oct. 78.

10. Verbal Communication, Sue Cariell, August 4, 1980, Linde, Cleveland, Ohio.

Table of Contents

SECTION 20.0 BALANCE OF PLANT DESIGN 20-1

20.1 Site Plan 20-2

20.2 Buildings Design 20-8

20.3 Site Facilities Design 20-36

20.4 Mechanical Systems Design 20-40

20.5 Building Services Design 20-58

20.6 Electrical Systems Design 20-73

20.7 Drawings 20-92

20.8 Outline Specifications 20-109

List of Tables

20-1 Natural Frequencies of Structural Concepts . . . 20-20

20-2 Summary of Evaluated Concepts 20-22

20-3 Power Conversion System Parameters 20-42

20-4 Circulating Water System Heat Loads 20-48

20-5 Closed Loop Cooling Water System Heat Loads . . 20-50

20-6 Standby Cooling Water System Heat Loads 20-53

20-7 Indoor Design Conditions 20-60

20-8 Fire Zoning Requirements, Type of Protection and Detection System 20-67

List of Figures

20-1 Reactor Building Configuration: Arch 20-16

20-2 Reactor Building Configuration: Ribbed Arch . . 20-16

20-3 Reactor Building Configuration: Box 20-17

20-4 Reactor Building Configuration: Ribbed Box . . . 20-17

20-5 Design Basis Earthquake (Damping 7%) 20-19

List of Figures (Contd)

20-6 ARCHITECTURAL 20-94
Fusion Power Plant
Site Plan

20-7 ARCHITECTURAL 20-95
Reactor, Turbine & Support, Electrical & RF
Power Supply & Onsite A/C Power Buildings
Sub-Grade Level Plans

20-8 ARCHITECTURAL 20-96
Reactor, Turbine & Support, Electrical & RF
Power Supply & Onsite A/C Power Buildings
Ground Level Plans

20-9 ARCHITECTURAL 20-97
Reactor, Turbine & Support, Electrical & RF
Power Supply & Onsite A/C Power Buildings
Upper Level Plans

20-10 ARCHITECTURAL 20-98
Reactor, Turbine & Support, Electrical & RF
Power Supply & Onsite A/C Power Buildings
Building Sections

20-11 ARCHITECTURAL 20-99
Tritium Reprocessing & Cryogenics Building,
Administration, Control & Site Service
Building Ground & Upper Level Plans, Sections

20-12 ARCHITECTURAL 20-100
Fusion Power Plant
Site Perspective

20-13 ELECTRICAL 20-101
Unit Generator and Auxiliary Power System
One Line Diagram

List of Figures (Contd)

20-14 BUILDING SERVICES 20-102
Reactor Building
HVAC Flow Diagram
20-15 BUILDING SERVICES 20-103
Tritium Reprocessing Building
HVAC Flow Diagram
20-16 BUILDING SERVICES 20-104
Hot Cell & Radioactive Waste Processing System
HVAC Flow Diagram
20-17 MECHANICAL 20-105
Power Conversion Cycle
Heat Balance
20-18 MECHANICAL 20-106
Reactor and Support Systems
Block Diagram
20-19 MECHANICAL 20-107
Power Conversion System & Cooling Water
Composite Flow Diagram
20-20 MECHANICAL 20-108
Essential Cooling Water Systems
Flow Diagram

The balance of plant facilities for this tenth-of-a-kind Tokamak Fusion power plant are a combination of both features common to any large power plant, and elements unique to the fusion technology. For example, the steam generators, turbine-generator and main condenser components of the power conversion system and the natural draft cooling towers that are used for heat rejection at sites not close to a large body of water are generic to power plants. The tritium reprocessing facilities that minimize the tritium inventory in the plant, the electrical and RF Power Supply Building that contains the coil and rf power supplies, and the Hot Cell in which fully remote repair and maintenance functions are performed are unique to a fusion power plant. The design of the balance of plant facilities has a significant impact on both the economic viability of a fusion power plant and the construction plan and schedule for such a plant. The cost estimate for the balance of plant shows the overall economic importance of these facilities and identifies the high cost elements.

In the overall plan of this fusion power plant, closely related facilities are combined into the same buildings that are then located to achieve a functional and economical layout. The central facility structure is the rectangular ribbed Reactor Building that houses the reactor and its subsystems. The design of this building is economic yet meets the requirements for totally remote maintenance, for a minimum wall thickness of 1.5m for shielding purposes, for overpressure protection against postulated loss of coolant accidents, and for constructibility and logical space utilization. The principal buildings and their spatial relationships are summarized below:

1. The Reactor Building contains the Tokamak fusion reactor and supporting systems.
2. To the south of the Reactor Building is the Turbine and Support Building that contains the energy conversion equipment, a reactor service area in which blanket sections and other new reactor subsystems are prepared, a plant auxiliary area that houses the closed loop cooling water system, and the Hot Cell.

3. The Electrical and RF Power Supply Building is placed to the east of the Reactor Building and the Tritium Reprocessing and Cryogenics Building is located to the north of the Reactor Building.
4. The administration, facility control and site service complex is located to the south of the Turbine and Support Building.

The layout of the balance of the plant facilities is shown on the site plan, drawing E-5959-AR-01 (Figure 20-6), included in subsection 20.7.

20.1 SITE PLAN

A discussion of the facility site plan is presented below.

20.1.1.1 Design Basis

Although the fusion power plant is designed to be suitable for a wide range of potential power plant sites throughout the continental United States, the following assumptions are made for the purpose of this study:

1. Location: Kansas City, Missouri (to facilitate cost estimate)
2. Seismic: UBC Zone 2
3. Site size: 400 hectares
4. Ambient temperature for:
   a. Cooling: 39°C
   b. Heating: 23°C
5. Altitude (maximum): 600 m
6. Principal heat rejection system: Natural draft cooling towers
7. Water supply: Assumed adequate to satisfy all normal requirements
8. Electrical utility transmission: EHV (345 kV)

20.1.2 Design Description

Principal site elements include buildings, roads, walks, fencing, and surface subsurface mechanical and electrical equipment and utilities, most notably the large natural draft hyperbolic cooling towers. The cooling towers are grouped at the rear of the site to provide a visual "backdrop" as viewed from the approach to the main entrance. The remaining site elements are located and arranged to optimize functional interrelation-

ships; that is, to minimize piping, electrical, and utility runs and at the same time provide adequate separation and circulation around and between buildings and other elements. An orderly and logical asymmetrical composition of site elements adds interest and yet maintains simplicity.

20.1.2.1 Secondary Road Access

External access to the site from a major highway is by a secondary road of 8 km maximum length. The road terminates at the main entrance gate to the site, adjacent to the Security Building and offsite parking lot.

20.1.2.2 Parking Lot

Plant personnel and visitor parking is accommodated in a paved and landscaped parking lot with space for 90 cars, located outside the perimeter fence and adjacent to the Security Building.

20.1.2.3 Security Building

All traffic to and from the site is controlled at the Security Building, located at the main entrance gate at the perimeter fence. Transport and delivery trucks and railroad cars undergo inspection by security personnel. Plant personnel and visitors must pass through inspection portals and identification devices in the Security Building prior to entering the plant. Those who do not proceed on foot to their work stations in the Administration/Control/Site Service Building may ride a shuttle car to more distant work stations within the plant boundary. The use of personal vehicles within the perimeter fence is generally not permitted. Parking spaces for shuttle cars and other plant vehicles are provided adjacent to the Security Building inside the perimeter fence. Visual surveillance and control of the railroad spur entrance is also possible from the Security Building.

20.1.2.4 Perimeter Fence

The principal elements of the plant are enclosed by a chain link perimeter fence, 3 m in height. The size of the enclosed space is 640 m by

680 m. The fence is lighted and equipped with microwave intrusion detection devices and closed circuit television, with monitors in the Security Building. Provisions for additional fencing are given with the discussions of related facilities in the following subsections.

20.1.2.5 Perimeter Road

The perimeter road encompasses all site elements within the perimeter fence except the cooling towers and water reservoirs. It is assumed that a perimeter road adjacent to the perimeter fence is not necessary because of the surveillance equipment on the fence. Access to all site facilities and secondary roads is provided.

20.1.2.6 Administration, Control, and Site Service Building

Located nearest to the Security Building and main entrance, the Administration, Control, and Site Service Building contains the greatest number of personnel on the site under normal conditions. A receiving area for both truck and rail transport is located on the north side of this building adjacent to the Warehouse and Maintenance Shop entrances. A widened road and driveways are provided for increased maneuverability, and give access to the Turbine and Support Building.

20.1.2.7 Turbine and Support Building

The Turbine and Support Building has the largest floor area of buildings in the plant. Adjacent to the turbine side is the main transformer yard and switchgear room, enclosed by a chain link fence 3 m in height. The support portion of the building includes the Reactor Service Building, the Plant Auxiliary Building, and the Hot Cell. Two connections to the Reactor Building include the air lock and the steam line passage.

20.1.2.8 Reactor Building

The Reactor Building houses the Tokamak fusion reactor device and supporting systems. The only entrance to this building is through the Hot Cell air lock, although there are two emergency exits (normally locked) in

the exterior wall. The building is centrally located between the Turbine Building, auxiliary systems, Hot Cell, tritium and cryogenics facilities, Electrical and RF Power Supply Building, and other related facilities. Underground tunnels for piping, conduit, and equipment access connect lower floors to some of these other buildings, as shown on the site plan.

20.1.2.9 Tritium Reprocessing and Cryogenics Equipment Building

Equipment and storage facilities for the treatment and reprocessing of tritium are located in the Tritium Reprocessing Building. Together with the Cryogenics Equipment Building and fenced yard, where gaseous and liquid helium and nitrogen are processed for use in the Reactor Building, these functions have minor relationships to most of the other site facilities. A parking area for onsite vehicles is provided, and a bank of helium storage tanks is located across the perimeter road.

20.1.2.10 Electrical Equipment and RF Power Supply Building

Directly east of the Reactor Building is the Electrical Equipment and RF Power Supply Building, with proximity to the main switchyard, the main transformer yard, the Onsite AC Power Supply Building, and the Reactor Building. Two tunnels connect this building to the subgrade level of the Reactor Building, where additional rf equipment is located. An adjacent fenced yard to the north contains an rf power supply substation.

20.1.2.11 Onsite AC Power Supply Building and Switchyard Control Room

In the event of loss of normal power, two gas turbine generators located in the Onsite AC Power Supply Building furnish ac power sufficient to complete an orderly shutdown of the Tokamak reactor.

The adjacent switchyard control room contains all equipment necessary for the normal operation and monitoring of incoming and outgoing power in the main switchyard.

20.1.2.12 Main Switchyard

The main switchyard is a fenced area that contains all the electrical equipment necessary to accommodate incoming and outgoing EHV power. It is located close to the Electrical Equipment Building and main transformer yard. Most of the components are modular SF_6 gas insulated, permitting the installation of lines both above and below ground within the site.

20.1.2.13 Raw Water Reservoir and Evaporation Pond

Located outside the perimeter road, the raw water reservoir and evaporation pond are formed by compacted earth berms and lined with soil cement. The adjacent pump house contains pumps for fire and domestic use, and chlorination facilities for potable water.

20.1.2.14 Fire Water Storage Tank

Adjacent to the raw water reservoir and evaporation pond is a 1140-m^3 fire water storage tank, located below grade. This tank supplies sufficient water to extinguish the maximum credible fire.

20.1.3 Design Alternatives

Alternative site plans are discussed below.

20.1.3.1 Degree of Combination or Separation of Plant Facilities

The most significant design alternative is in the degree of combination or separation of the various plant facilities. In the extreme, the entire plant could be contained in one huge building; however, circulation would be difficult and complicated. Utility, piping, electrical, and other interfaces would require very tedious planning and coordination. Contrarily, each function could be housed in entirely separate buildings. Flexibility would be vastly increased, but piping and electrical lines would require greater lengths between buildings, increasing facility cost. Also, the lack of common structural elements would lead to a further cost penalty. Multiple separate buildings, however, offer the advantage of maximum flexibility in design and construction and might be attractive for early fusion reactor plants. For a

mature fusion industry, the additional cost of such an approach would not be warranted.

The most logical approach to a tenth-of-a-kind facility appears to be the combination of closely related facilities into the same buildings and the careful placement of each building relative to the other buildings and other site features. In this approach, a workable and cost-effective solution may be obtained. It is recognized that the actual topography of a selected site might dictate some adjustments in vertical relationships, but the overall functional blocks would not be re-arranged.

20.1.3.2 Duplicate Reactors

The impact of the placement of twin reactors on the same site has also been considered. Advantages of such an approach include:

1. Licensing of a single site, instead of two separate ones.
2. Sharing of facilities such as administration, security, site services, reactor service, evaporation pond and raw water reservoir, roads, and some transmission line and switchyard facilities. A common turbine generator building could also be used. However, some major facilities such as the Reactor Building and cooling towers would probably have to be duplicated.
3. Use of common management and construction crews, leading to increased productivity on the second unit based on elimination of problems encountered on the first unit.
4. Potential for levelling manpower needs by smoothing labor peaks and valleys during the overall construction phase.
5. Cost savings by purchase of larger quantities of bulk materials and equipment, and use of common construction equipment.
6. Potential utilization of equipment from Unit 2 to replace failed items during pre-operational, startup, and testing activities on the first unit.
7. Reduced overall site development and manpower mobilization costs.

8. Reduced engineering costs where a common design for the two units is used.
9. Operational flexibility by using each unit to provide startup power for the other, rather than drawing large blocks of power from the grid, and by scheduling of maintenance shutdowns to ensure at least one operating unit at all times.

The recommended reactor size of 4000 MW thermal corresponds with the capacity of a single turbine generator and dictates the single reactor facility developed for this study. Alternative requirements calling for larger blocks of power at a single site would be implemented by using multiple reactors and would result in lower unit costs.

20.2 BUILDINGS DESIGN

This subsection discusses the architectural and structural design of the facility buildings. Architectural drawings (Figures 20-7 through 20-12) are included in subsection 20.7.

20.2.1 Reactor Building

The Reactor Building is a steel-lined, ribbed box structure that contains the reactor, primary cooling systems, and other support systems. Details of its architectural and structural features are described below.

20.2.1.1 Architectural

Although the most significant visual aspects of the Reactor Building are essentially dictated by maintenance, structural, and shielding requirements, its most prominent architectural feature is the use of its interior space, particularly the equipment layout.

The Reactor Building houses the Tokamak fusion reactor and closely related systems. These systems, broadly referred to as "process modules," include the primary loop components and steam generators, heat exchangers and pumps, the vacuum pumping and blanket purge system, the limiter feedwater loop module, and the RF cooling system module. Additional modules not directly related to the reactor include the HVAC systems and the atmospheric

tritium cleanup (ATC) systems. Additional equipment laydown space is also provided. A 1.5-m-thick, partial height, shielding wall and sliding doors separate the module area from the reactor to minimize activation of materials in the process module area. The pressure boundary of the building is lined with steel. Other interior surfaces are coated with decontaminable paint.

The design of the Reactor Building is also largely based on a commitment to totally remote maintenance. Although it is envisioned that personnel need never set foot in this building (except in the crane maintenance balcony and the sub-grade level), it would not be impossible to do so under extreme and unusual circumstances. Ordinarily, however, a highly sophisticated system of remote maintenance and transport equipment is expected to perform all maintenance and repair operations, and have enough flexibility to perform unplanned or unforeseen tasks as well. Some operations are routine and are programmable; others may be under direct operator control. Operator involvement will depend on the specific functions performed and the degree of decision-making required.

The Reactor Building is 120 m long and 50 m wide (inside clear dimensions), and consists of three levels in addition to the crane maintenance balcony, which is only a fraction of a complete floor level. The reactor and process modules are located on the ground level. The height to the under surface of the roof slab is 42.5 m. A 600-ton* capacity bridge crane spans the width of the building and runs its entire length. The first level below ground (not shown on drawings) is a pipe chase 3 m in height. All pipelines, conduits, and other connections between the reactor and the modules penetrate the ground level floor, run through the pipe chase to a point below the respective module, and up through the floor again. In the same manner, HVAC major duct runs extend to the corners of the building. Piping runs, therefore, are isolated from and kept clear of the remote maintenance equipment traveling on the ground floor.

The pipe chase, reactor hall, and process module areas are subject to overpressure under accident conditions. Access to the pipe chase is by two removable hatches, one at each end of the building on the ground floor.

The second level below ground is the routinely occupied sub-grade floor, which is not subject to overpressure, significant radiation, or a

*In this chapter, "ton" refers to a metric tonne, i.e. 1000 kg.

tritium atmosphere. Provision is made at the sub-grade level for emergency exit from the southwestern corner of the building. Located on this level are the rf system components and HVAC mechanical and electrical equipment. The space is divided into a rectilinear grid of 1.5-m-thick concrete walls for supporting the heavily loaded floors above. The rf component area is arranged in a radial design around a massive, concrete, 22-m-diameter pedestal that supports the reactor above. The radial pattern allows the rf components to be placed equidistant from the rf duct inlets to the reactor. A special 5-ton bridge crane runs above the equipment on concentric runway rails.

The HVAC equipment rooms open into large areaways to grade for fresh air intake. These areaways are located inside an enclosed courtyard between the Reactor Building and the Turbine and Support Buildings. They are open to the sky and accessible only from the plant auxiliary area. One end of the central corridor on this level opens to an exhaust air tunnel that leads to the stack. The top of the tunnel opens to a vertical shaft to grade with a heavy concrete hatch cover that may be removed prior to lowering large equipment into the sub-grade level spaces with a portable crane.

Two sloping tunnels connect the rf component end of the sub-grade level with the Electrical Equipment and Power Supply Building sub-grade level, where all rf power supply equipment is located. Each tunnel accommodates the electrical and rf lines and provides additional equipment and maintenance access to the Reactor Building sub-grade level.

A large crane maintenance balcony is located at the end of the building, remote from the reactor, where routine maintenance and repair are conducted on the 600-ton bridge crane, the 60-ton process module area bridge crane, and the electro-mechanical manipulators. The 60-ton crane and manipulators must be lifted and carried into the maintenance area by the 600-ton crane above. Maintenance in this area is "hands-on" by personnel wearing protective suits. Access to the balcony is from the reactor service area in the Turbine and Support Buildings by stairs or a freight elevator to the plant auxiliary area equipment mezzanine, across to a large corridor above the Hot Cell air lock, and up another set of stairs or freight elevator to a vestibule at the same level and adjacent to the balcony. The freight

elevators are provided for the transport of any large or heavy tools or equipment such as fork lifts, jacks, or compressors, as well as personnel (as needed) for crane maintenance.

The remote maintenance system employed in the Reactor Building also extends to the Hot Cell. The portion in the Hot Cell is described in subsection 20.2.5. The equipment runs on a solid monorail track, 3-m wide and 1-m high off the ground floor. The track layout is shown on the Reactor Building ground floor plan, included in subsection 20.7. The track is arranged to allow movement of system components into position to perform remote maintenance and repair functions on the process module equipment, the ATC systems, the HVAC equipment, as well as the reactor itself.

There are two basic devices for use on the monorail track:

1. Servo-manipulator transporter:

   Although there may be several variations of this device as maintenance functions become more defined, the basic device consists of a truck with wheels that firmly grip the monorail above and below for high stability during a maintenance operation and when in motion. Mounted on the truck is a rotating, telescoping tower that can extend up to 24 m in height and retract down to 12 m for passage through the air lock openings. A vertical traveling and locking trolley is mounted on the tower and moves up or down to a height as required by a specific operation. Mounted on the trolley is a rotating, telescoping tube with a pair of parallel jaw hands, hooks, TV cameras, and other accessories.

2. Transporter Cart:

   Sized to accommodate various major components of the reactor, the cart is large enough to transport a blanket segment, a shield door, or smaller items to the Hot Cell along the monorail track. The cart is supported on a scissors-jack base that provides overall height adjustment.

Segments of the monorail track can be moved in and out of position to provide switching capabilities. A complete circle of track surrounds the reactor for total circumferential access. The floor monorail system is used

to transport reactor equipment to the Hot Cell for maintenance or repair. In addition to the floor-mounted equipment, the overhead bridge cranes and electro-mechanical bridge manipulators assist in the maintenance functions by providing access to the top and upper equipment areas of the reactor and various modules not accessible to other systems. The 60-ton bridge crane at the process module end of the building is capable of lifting and removing process equipment for repair and replacement.

The 600-ton bridge crane with two 300-ton trollies is expected to perform occasional severe service lifting rather than traveling with a heavy load. The only time that a lift will approach the rated crane capacity is during installation or replacement of a 2.2-m-wide x 11.0-m-long x 15.7-m-high, 580-ton TF coil. Replacement is not expected more than once during the 40-year life of the plant. Similarly, replacement of a 4.1-m-wide x 8.0-m-long x 14.0-m-high, 270-ton shield sector, or a 2.2-m-wide x 8.0-m-long x 11.4-m-high, 360-ton shield ring, or a 30.0-m-diameter x 1.0-m-thick, 450-ton EF coil is not anticipated more than once during facility operation. Replacement, if ever required, will be through a 32-m-high x 6-m-wide, removable, segmented section of the east wall of the Reactor Building.

20.2.1.2 Structural

1. Design Basis

The following structural design basis is applicable to the Reactor Building and other facility buildings as indicated below.

(a) Codes and Standards

Industry codes and standards will be used consistent with technical and licensing requirements for the facility.

(b) Design Loads

Design loads and forces for all structures include dead, live, wind, earthquake, and impact. Equipment loading is used, as applicable, if equipment loads including impact are greater than the minimum design loads over the area occupied by the equipment. All supports are designed for the maximum live load that it is possible to put in or on the equipment. Hardened structures are also designed to withstand tornado

wind forces and missiles, and require a dynamic seismic analysis for the Design Basis Earthquake (DBE) condition.

(c) Definitions and Loading Criteria

The following definitions and loading criteria are used.

- Dead Load (DL):

  Dead load is the vertical load due to the weight of all permanent structural and nonstructural components of a structure, such as walls, floors, roofs, piping, equipment, heating, ventilating, and air-conditioning systems. The vertical and lateral pressures of liquids are also treated as dead loads, as provided in Section 9.3.5 of ACI 318-77.

- Live Load (LL):

  Live load is the load superimposed by the use and occupancy of the structure not including the wind load, seismic load, or dead load.

The following live loads are used in the design:

Roof:	98 kg/m^2
Reactor ground floor:	1960 kg/m^2 and equipment and transporter loads
Other floors:	735 kg/m^2 and equipment
Stairs and walkways:	490 kg/m^2
Railroad surcharge:	Per American Railroad Engineers Association (AREA) Manual

- Construction Loads:

  Surcharge outside and adjacent to the structure is 1470 kg/m^2 or 3636 kg wheel load, whichever is governing.

- Crane Loads:

  All cranes will be tested to 125% of rated load. Structural systems will be designed for impact and horizontal loads in accordance with the American Institute of Steel Construction (AISC) Specification.

- Earth Pressure:

  Foundation bearing pressure for foundations 3 ft below grade is 19,600 kg/m^2. For deep foundations and basements, the maximum bearing pressure at the toe of foundation is 49,000 kg/m^2.

- Groundwater Table:

  The groundwater table for the site is taken to be 6 m below grade.

- Wind and Tornado Load:

  The basic wind load is 147 kg/m^2. Tornado forces and protection against low-trajectory turbine missiles are in accordance with Nuclear Regulatory Commission (NRC) Regulatory Guides 1.76 and 1.115, respectively.

- Seismic Loads:

  Hardened structures are designed for the DBE condition, with a horizontal ground acceleration of 0.13 g and a vertical acceleration of 2/3 of the horizontal ground acceleration. All other structures are designed for Zone 2 in accordance with Section 2312 of the Uniform Building Code.

2. Design Description

The Reactor Building is a steel-lined, hardened structure constructed of reinforced concrete designed for the nonconcurrent conditions of DBE seismic loading and 166 kPa internal overpressure. The 1.5 m thick building outside walls and roof prevent penetration by tornado missiles, withstand tornado winds and a tornado-induced differential pressure, and provide adequate shielding. The building is designed as a ribbed box structure and analyzed as a series of "T-beams" with the walls and roof forming a rigid frame fixed at the ground floor. The walls acting with the floors transfer all forces to the base slab foundation. The reactor is supported on a large concrete pedestal that transfers the reactor loading directly to the supporting soil strata. The

pressure boundary is located at the inside of the building exterior walls, at the roof, and at the top of the floor below the ground floor. Special pressure-tight penetrations are installed where piping or utility lines cross the containment boundary. The reactor hall floor transfers heavy loadings from equipment and the blanket transfer system to a grid of walls that further carries the loads to the base slab foundation.

A coated carbon-steel liner provides a leak-tight boundary and minimizes tritium release in the event of a loss of primary coolant within the building.

3. Design Alternatives

Four structural configurations of the Reactor Building were considered as possible concepts. These concepts included an arch, ribbed arch, box, and ribbed box as shown in Fig. 20-1 through 20-4. These figures describe a typical cross-section of the Reactor Building, that for these studies was estimated to be 48-m wide and 130-m long. The arch configurations required a height of 48 m because of some wasted space above the bridge crane, whereas the box configuration allowed a reduction of the inside height to 40 m.

The analyses that were conducted on these four structural configurations included dead weight, live load, seismic, and internal pressure loading conditions. The analytical models were based on a typical cross-section of the Reactor Building that was not near the end walls or other intermediate walls or supports. The purpose of the analyses was to determine the relative efficiency of the four configurations to withstand the critical loading conditions. In each analysis of the four configurations it was assumed that the foundation slab was much thicker and therefore much stiffer than the walls, thereby permitting the analytical model to restrain the rotation of the wall at the intersection with the foundation. In addition, the influence of the soil pressures on the partially buried walls was ignored in each analysis. Since the active soil pressures increase with depth, they would not produce significant bending moments in the walls as compared to the fixed end bending moments computed for either the seismic or internal pressure loading conditions.

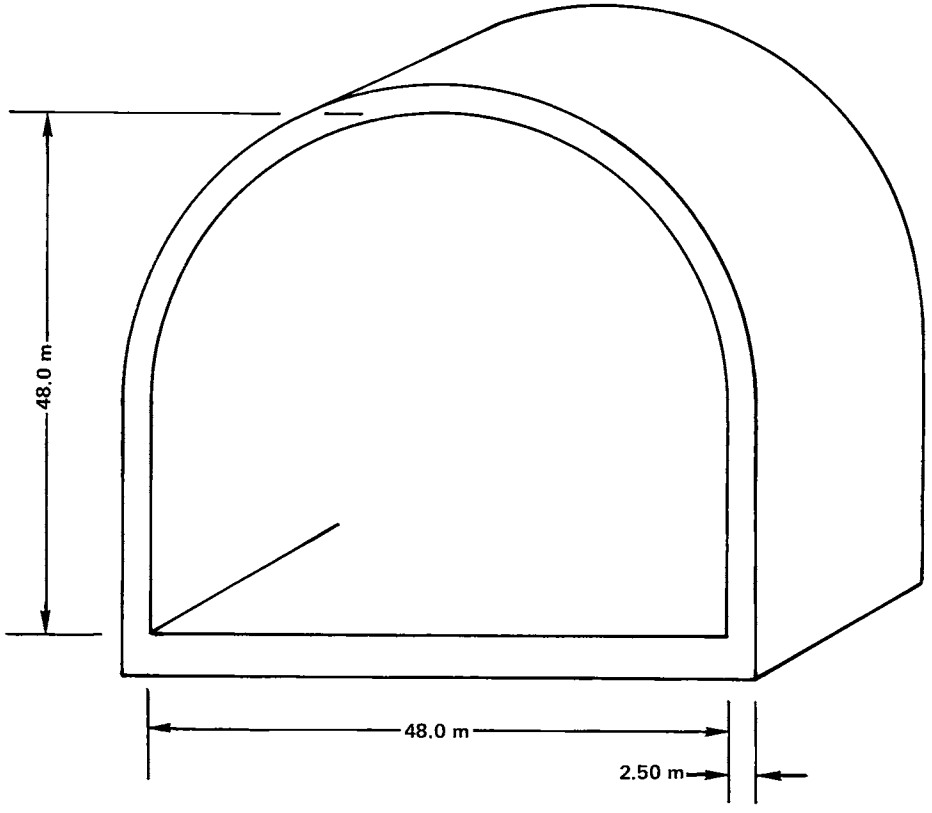

Figure 20-1. Reactor Building Configuration: Arch

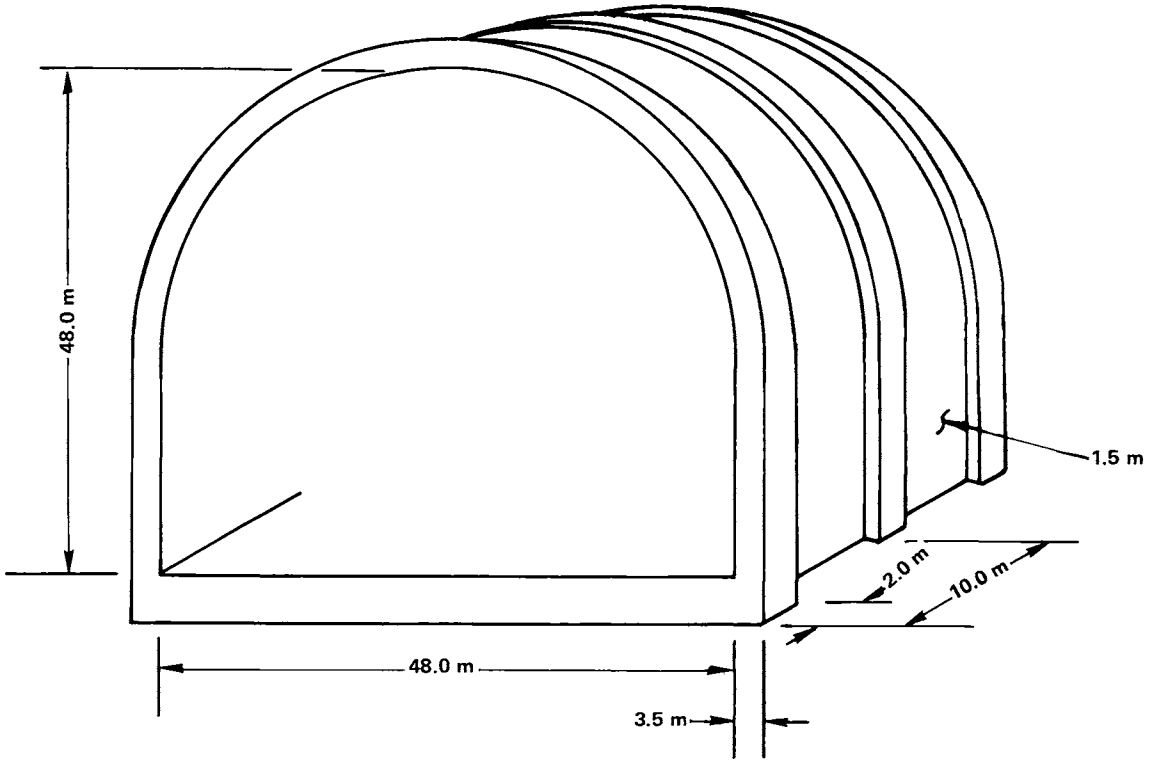

Figure 20-2. Reactor Building Configuration: Ribbed Arch

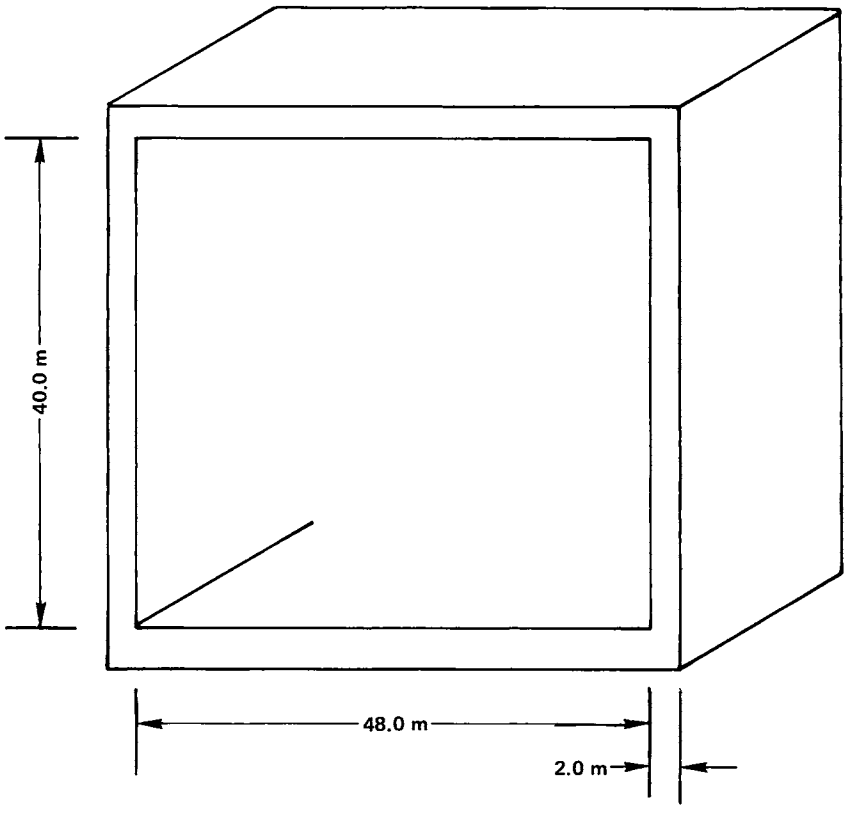

Figure 20-3. Reactor Building Configuration: Box

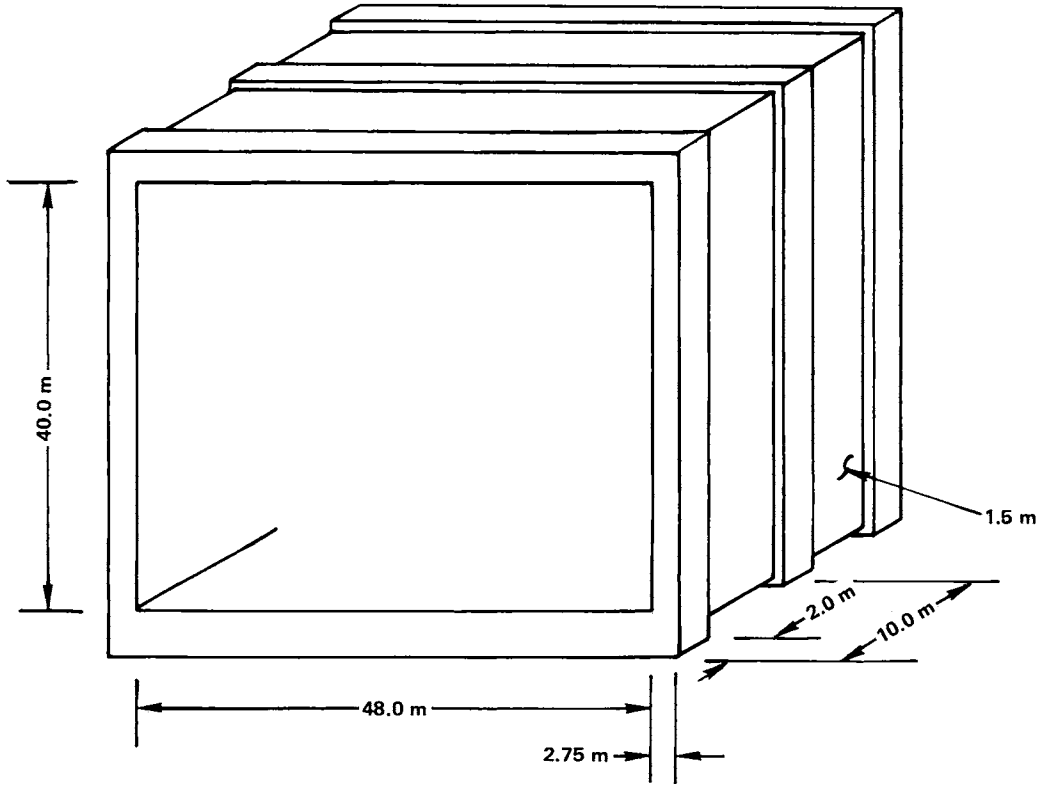

Figure 20-4. Reactor Building Configuration: Ribbed Box

The material properties for the concrete and reinforcing steel were based on typical strengths of materials used in nuclear facilities. The concrete strength in compression was assumed to be 34.5 MPa, which requires good quality control of the cement, aggregate, and water ingredients, and control of the amount of mixing used to combine the ingredients. Although 27.6 MPa-strength concrete is considered to be a nominal value, it is not difficult to achieve a 34.5 MPa or even higher strength with proper quality control. The reinforcing bars were assumed to have a 414 MPa yield strength, which is the nominal re-bar strength.

The four configurations were evaluated for dead load based on a unit concrete weight of 2.4 g/cm^3, a snow load (live load) of 98 kg/m^2, an internal pressure of 166 kPa, and a seismic load based on an earthquake having a peak horizontal acceleration of 0.13 g and a peak vertical acceleration of 2/3 of the horizontal ground motion acceleration. Three load combinations were considered in these evaluations:

1. DL + LL + 1.25 IP
2. DL + LL + E'
3. 1.4 DL + 1.7 LL

where:

DL = Dead load

LL = Live load

IP = Internal pressure load

E' = Design basis earthquake load

These load combinations are based on the N.R.C. Standard Review Plan, Section 3.8.4[1] and should provide a conservative basis for evaluating the conceptual designs. The peak horizontal ground acceleration of 0.13 g was provided to the project as the applicable foundation level maximum horizontal acceleration. Note that for other sites it is possible that the bedrock acceleration can be amplified by intermediate soil layers between the foundation and the bedrock. However, in this conceptual evaluation it was assumed that the 0.13 g was applicable at the foundation level, and therefore, the 7% damped seismic response spectrum was selected in accordance with N.R.C. Regulatory Guides 1.60[2] and 1.61[3]. The horizontal seismic response spectrum is shown in Fig. 20-5.

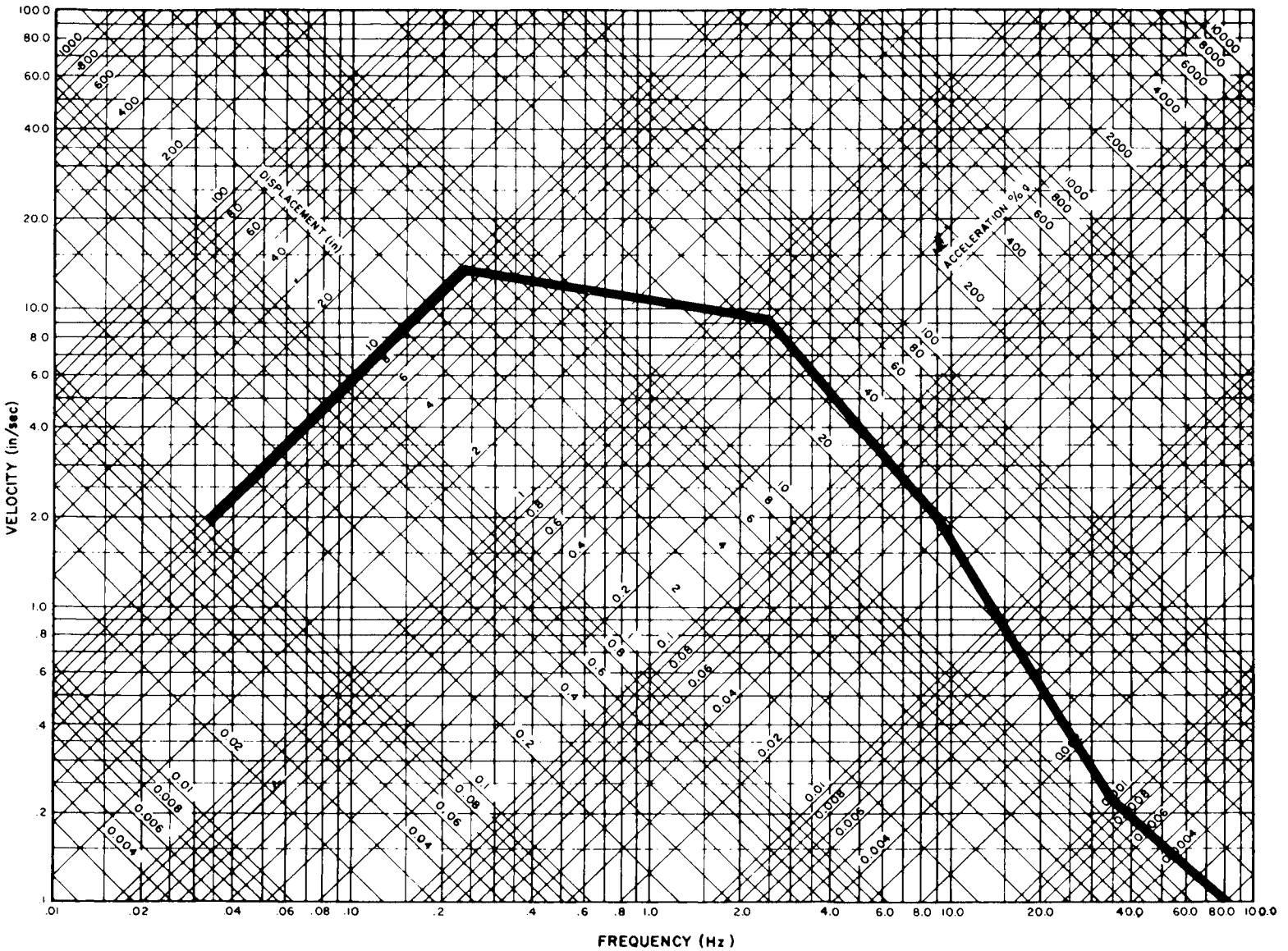

Figure 20-5. Design Basis Earthquake (Damping 7%)

The seismic analyses were based on a modal frequency analysis of each configuration. Only DBE loadings were considered, as they are usually governing with heavy sections and are shown to be small relative to the overpressure loadings. The results of the modal analyses are shown in Table 20-1. These mode shapes and frequencies were used with the vertical and horizontal seismic response spectra to determine the modal response of the configurations. The responses were combined using the "square-root-of-sum-of-squares" and closely spaced mode techniques described in the N.R.C. Regulatory Guide 1.92[4]. In all cases at least 93% of the structural mass was represented by the modes shown in Table 20-1. Therefore, the influence of higher mode responses should be negligible.

Table 20-1. Natural Frequencies of Structural Concepts

	Frequencies of Concepts (hz)			
Mode	Arch	Ribbed Arch	Box	Ribbed Box
1	0.751	2.606	0.661	0.553
2	2.197	6.979	2.189	1.832
3	4.169	12.405	4.305	3.583
4	6.359	14.899	4.484	3.725
5	8.929	17.285	7.476	6.225
6	11.783	18.260	11.468	9.456
7	15.418	23.880	12.809	10.495
8	15.950	28.840	14.857	12.568
9	18.187	34.386	19.164	17.668
10	19.551	-	21.248	18.712
11	24.010	-	23.308	19.391
12	28.610	-	23.321	20.696

As shown in Fig. 20-1 the thickness of the arch was determined to be 2.50 m and was assumed to be constant. The maximum bending moments per meter of the Reactor Building length were 3.3 x 10^6 kgm, 0.8 x 10^6 kgm, and 0.7 x 10^6 kgm for the internal pressure loading of 166 kPa, for 1.4 times the dead load and for the DBE seismic loading, respectively. All of these maximum moments occurred at the intersection of the wall and the foundation slab.

The ribbed arch configuration shown in Fig. 20-2 reduces the wall thickness to 1.50 m by adding ribs or "T-beams" at a 10-m spacing. The T-beam increases the wall thickness to 3.50 m for a distance of 2.00 m in the longitudinal direction of the Reactor Building. The maximum bending moments per "T-beam" of 10-m width were 41.0 x 10^6 kgm, 6.6 x 10^6 kgm, and 15.0 x 10^6 kgm for the internal pressure loading of 166 kPa, for 1.4 times the dead load and for the DBE seismic loading, respectively. All of these maximum moments occurred at the intersection of the wall and the foundation slab.

A uniform wall thickness of 2.00 m was estimated for the simple box configuration shown in Fig. 20-3. The maximum bending moments per meter of Reactor Building length were 2.9 x 10^6 kgm, 1.1 x 10^6 kgm, and 0.7 x 10^6 kgm for the internal pressure loading of 166 kPa, for 1.4 times the dead load and for the DBE seismic loading, respectively. The location of the maximum bending moment for the internal pressure loading was at the intersection of the wall and the roof slabs. The location of the maximum bending moment for the dead load was at the mid-span of the roof slab. The location of the maximum bending moment for the seismic loading condition was at the intersection of the wall and the foundation.

The ribbed box configuration shown in Fig. 20-4 has a reduced wall thickness of 1.50 m and a T-beam spacing of 10 m. The T-beam locally increases the wall thickness to 2.75 m for a distance of 2.00 m in the longitudinal direction of the Reactor Building. The maximum bending moments for a typical 10-m-wide T-beam were computed to be 29.0 x 10^6 kgm, 10.8 x 10^6 kgm, and 4.6 x 10^6 kgm for an internal pressure load of 166 kPa, for 1.4 times the dead load, and for the DBE seismic loading, respectively. The locations of the maximum bending moments for the ribbed box configuration are the same as for the simple box configuration. That is, the locations of

maximum bending moment occurred at the wall-roof intersection for internal pressure loading, at the roof mid-span for dead load, and at the wall-foundation intersection for the seismic loading.

The results of the four concept development and evaluation analyses included estimates of the relative costs of a fixed length of Reactor Building wall and roof structure. These cost analyses allowed for concrete and liner plate quantities, form work and labor, and nominal reinforcing steel percentages. Intermediate and end walls were not included in the economic evaluation of the wall and roof system; therefore, the cost percentages should not be applied to the total Reactor Building costs. The results are shown in Table 20-2.

Table 20-2. Summary of Evaluated Concepts

Concept	Configuration	Reinforcement (%)	Relative Cost (%)
Arch	Wall, 2.5 m	3.6	100
Ribbed arch	Wall, 1.5 m	0.8	93
	Rib, 2.0 m x 3.5 m	2.6	
Box	Wall, 2.0 m	3.5	80
Ribbed box	Wall, 1.5 m	1.2	76
	Rib, 2.0 m x 2.75 m	2.9	

The 2.5-m-thick arch configuration requires 3.6% reinforcement; however, the 2.0-m-thick box configuration requires 3.5% steel reinforcement. This indicates that the thinner box configuration is nearly at the same percentage of the ultimate capacity of the concrete section as the arch configuration. The following simplification of the cost values can be derived from Table 20-2. The box configuration is approximately 20% less expensive than

the arch configuration, and the introduction of ribs causes an additional 4% to 7% reduction in cost. Therefore, on the basis of the economic analysis performed the ribbed box provides the least expensive design configuration. Also, the ribbed configuration may be a helpful one for the building construction. The beam structures could possibly be pre-cast and used to assist in supporting the form work loads of the adjacent slabs. This approach could assist in solving the difficult task of supporting the weight of the cast-in-place concrete roof slabs.

20.2.2 Turbine Building

Architectural and structural features of the tri-level Turbine Building are presented below.

20.2.2.1 Architectural

A major portion of the largest plant structure (in terms of floor area) is devoted to the Turbine Building, which contains a single 1440-MWe turbine generator and its auxiliaries. Taking up three basic floor levels, equipment is arranged with a surface condenser in the sub-grade level, feedwater heaters at the ground floor level, and the pedestal-mounted, turbine generator at the upper level.

The building is 110 m long and 50 m wide on all three levels. The sub-grade level is occupied mainly by the condenser and concrete turbine pedestal. Additional equipment and systems located at this level include heat exchangers, condensate pumps, caustic and acid tanks, lube oil reservoirs and conditioner, a chemical equipment room, a battery room, a demineralizer equipment area, and various tanks, motors, and piping.

The ground floor level contains primarily feedwater heaters, with adequate tube-pulling and maintenance space, as well as a continuation of the turbine pedestal. An auxiliary boiler room, clean and dirty lube oil tank room, and various other tanks, pumps, and piping complete the equipment for this level. A railroad spur emerges from the adjacent Reactor Service Building and ends under an equipment hatch in the floor above. An electrical switchgear room and main and reserve transformer yards flank the Turbine Building at this level, and are enclosed within chain link fencing.

The upper level or "operating floor" contains the turbine and its casings, moisture separator/reheaters, and the generator, along with additional feedwater heaters supplementing those on the ground level. Again, adequate space for both tube and rotor pull is provided. A 250-ton bridge crane travels overhead the length of the building and is used for equipment installation, removal, and maintenance.

An additional partial upper level gallery is located on each side of the building for large HVAC ducts that provide cooling air for the Turbine Building. Equipment supplying these ducts is located in the Plant Auxiliary Building mezzanine.

20.2.2.2 Structural

The turbine pedestal portion of the Turbine Building is steel framed, with the crane columns considered fixed at the base laterally and braced longitudinally. Trusses support the roof in the turbine bay with top and bottom chord bracing transmitting horizontal loads to the columns. Crane lateral forces are considered supported at the bottom chord by means of bracing to the adjacent columns. The supported floors, which act as diaphragms, are mainly concrete and have steel decking welded to the structural support frame. Wind, seismic, and crane loading in the longitudinal direction is transferred by vertical bracing to the base mat. The base mat is used as a foundation mat, transfering all the building forces to the supporting soil strata.

The turbine generator support pedestal is designed to meet the requirements of the turbine manufacturer. The pedestal is of a low-tuned design and is separate from the Turbine Building.

20.2.3 Plant Auxiliary Building

Architectural and structural features of the Plant Auxiliary Building are discussed below.

20.2.3.1 Architectural

Equipment, including heat exchangers and pumps for the closed loop cooling water system, is housed in the two-level Plant Auxiliary Building,

located between the Turbine Building and the Hot Cell and adjacent to the Reactor Service Building.

Located on the ground level are chillers, pumps, instrument air equipment, and adequate tube pulling and laydown space for maintenance. A machine shop and tool crib are used in common with the reactor service area. Stairs and a freight elevator give access to an upper level that contains air handling units, pumps, plenums, and other HVAC equipment for the balance of the building. This area also affords access to the crane maintenance areas of both the Hot Cell and the Reactor Building.

20.2.3.2 Structural

The Plant Auxiliary Building and the Reactor Service Building are attached to each other and act as one building. The combined building is a steel-framed structure using both rigid frame action and bracing to transfer horizontal forces to the foundation. The roof has both steel beams and trusses to support roof loadings with bracing to transfer horizontal loads to the columns. Concrete floors are supported on steel framing and have steel decking welded to the frame, the floor acting as a diaphragm. The columns are supported on individual spread-footing foundations.

20.2.4 Reactor Service Building

Architectural and structural features of the Reactor Service Building are described below.

20.2.4.1 Architectural

Preparation of blanket segments and other new reactor subsystems, equipment, and parts is carried out in the reactor service area, a ground level high bay area between the Hot Cell and Turbine Building, and adjacent to the Plant Auxiliary Building. The railroad spur passes through the receiving end of this building, where there is also access for large vehicles and other equipment. Storage spaces for new blanket segments and other reactor and process module components flank a large space, 20-m wide by 40-m long by 20-m high, where service operations are carried out including reactor subsystem and process module assembly. A 60-ton bridge crane travels overhead

and covers both the railroad spur area during flatcar unloading operations and the service area during maintenance and assembly activities.

An electrical equipment room is located in the common space between the Reactor Service Building and the Plant Auxiliary Building areas. A mezzanine about this space and below the upper level contains personnel toilets and showers, a first aid room, a lunch room, and an office and storage area.

20.2.4.2 Structural

For the description of the structural design of the Reactor Service Building, see subsection 20.2.3.2.

20.2.5 Hot Cell

The architectural and structural features of the Hot Cell are discussed below.

20.2.5.1 Architectural

A variety of fully remote functions are performed in the Hot Cell, notably repair and maintenance of components from the Reactor Building. The Hot Cell is characterized by its massive concrete walls, up to 1.5-m thick around the perimeter, and 1-m thick within. The perimeter walls, roof, and floor of the Hot Cell are lined with steel. All surfaces are coated with decontaminable paint.

The railroad spur passes the external entrance to the Hot Cell, and road access is provided to enable trucks and other large vehicles to approach the Hot Cell entrance. A 60-ton bridge crane travels overhead and can introduce heavy loads to the Hot Cell air lock through a combination door and hatch entrance, and onto a transporter car traveling on a continuation of the monorail track to the Reactor Building monorail system. A room containing decontamination equipment and storage pool cooling equipment is located on one side of the air lock, and the Hot Cell control room is located on the other side. To the north and adjacent to the air lock is a decontamination chamber with a turntable in the track. Decontamination is required for casks containing either activated blanket segments for reprocessing offsite or solid waste for offsite recycle or disposal.

Beyond the decontamination area and located beside the control corridor are three process cells. The liquid waste processing equipment separates activated particulate matter from tritiated water that is then returned to the Tritium Reprocessing Building. The blanket module and solid waste processing cell contains the equipment required to bake out tritium from spent blanket segments and to reduce the segments into pieces conveniently sized for storage in canisters. The remote maintenance and repair shop contains equipment for shield door seal and latch mechanism replacement and for repair of failed process module components. Entrance into each cell is made by rotating the transporter cart or servo-manipulator on a monorail turntable to align it with a perpendicular track that leads through a pair of horizontal sliding doors notched around the track at the bottom. Once inside a cell, further component handling is by a 60-ton bridge crane and an electro-mechanical bridge manipulator. Each cell is equipped with an atmospheric tritium cleanup system.

Both wet and dry solid waste storage facilities are provided in the blanket module and solid waste processing cell. Wet storage for 600 m^3 of spent blanket segments and dry storage for 400 m^3 of discarded shield doors, pumps, valves, and piping is available. Waste is stored in canisters lowered into storage racks by the overhead bridge crane. The rack grid provides stability for the canisters, simplifying identification and retrievability should this ever become necessary. Efficient and cost-effective use of space above the wet storage tanks is obtained by locating the bottom of the tanks at the same floor level as the cell.

Above the central corridor is a gallery in which HVAC and electrical equipment is contained. Piping and duct runs to the various cells are also made through this gallery. Access to the gallery is made at the north end of the Hot Cell, at the corridor to the crane maintenance area. Additional access is at the south end near the Hot Cell entrance.

20.2.5.2 Structural

The Hot Cell is a carbon steel lined, concrete, hardened structure designed for DBE seismic loading. The building outside walls and roof are thick enough to prevent penetration by tornado missiles, to withstand tornado

winds and a tornado-induced differential pressure, and to provide adequate shielding. The inside walls and floor act with the outside walls and roof to transfer all loadings by rigid frame action to the foundation. The inside walls and floor are sized to meet shielding requirements. The base slab acts as the foundation mat, transfering all forces to the supporting soil strata. The concrete waste storage tanks are designed to withstand a DBE seismic event along with the normal loading conditions.

20.2.6 Electrical Equipment and RF Power Supply Building

The architectural and structural features of the Electrical Equipment and RF Power Supply Building are outlined below.

20.2.6.1 Architectural

Power for a number of reactor components is furnished by equipment located in the Electrical Equipment and RF Power Supply Building. This structure consists of three levels, and is 70-m long by 50-m wide. The ground level is essentially one large room that contains the power supplies for EF, OH, and TF coils, in addition to 13.8-kV switchgear. An HVAC equipment room, three sets of stairs, and a freight elevator to lower levels complete the ground level. Directly beneath the ground level is a large cable-spreading room, (shown only in section on the drawings), which occupies essentially the same space as the equipment room above.

RF power supplies are located in the normally occupied sub-grade level, together with 13.8-kV switchgear and 480-V load centers. Also located at this sub-grade level are maintenance, repair, and storage areas. A small office and control room at this level enables personnel to monitor the performance of the system and to locate any faulty components. Conduits from the rf power supplies are run overhead and routed in equal numbers into the overhead space of the two tunnels to the Reactor Building sub-grade level, where the rf components including amplifiers, phase shifters, circulators, and gyrotrons are located. A gyrotron power supply substation is located in an exterior equipment yard adjacent to the north side of the building.

20.2.6.2 Structural

The Electrical Equipment and RF Power Supply Building is a steel-framed structure supported on concrete basement walls and columns. The horizontal forces are taken by rigid frame action to the foundation, with roof bracing distributing these forces to other columns. The supported floors are concrete slabs resting on steel decking, which is welded to the steel frame, the floors acting as diaphragms. The basement walls are supported on continuous footings with inside columns supported on individual spread footings.

20.2.7 Tritium Reprocessing Building

The architectural and structural features of the Tritium Reprocessing Building are outlined below.

20.2.7.1 Architectural

The tritium and cryogenics facilities are combined into one building, with the tritium components located in two separate areas:

1. Areas not subject to tritium contamination, and
2. Areas subject to potential tritium contamination, in which special clothing and equipment must be used.

The portion of the Tritium Reprocessing Building that contains potentially contaminated areas is hardened in accordance with applicable seismic and tornadic design criteria, and is lined with coated carbon steel to minimize the potential escape to atmosphere of tritium released from process equipment. Tritium-free areas of the building are occupied on an everyday basis and include the offices, toilets, and showers on the ground level and the tritium equipment control room, office, and HVAC equipment room on the upper level. The control room is lined with steel to shield the operators from reactor coil magnetic fields. An air lock separates the tritium-free areas from the potentially contaminated areas. Beyond the air lock is a corridor that contains a protective suit storage alcove and an emergency shower room. The corridor also provides access to the balance of the facility.

In addition to the tritium reprocessing equipment room, there is an analytical laboratory, a maintenance and repair shop, and a storage room for

new tritium and deuterium adjacent to the exterior loading dock. Uranium bed storage for reprocessed tritium and deuterium is located in a separate room. A stairway leads to the upper level, which contains a room for HVAC equipment suitable for a tritium atmosphere and another room containing atmospheric tritium cleanup modules. Equipment on the upper level in the tritium reprocessing equipment room is surrounded by a metal catwalk grating and railings. The remaining space is open to the ground level below. A 5-ton overhead traveling bridge crane is used for maintenance as well as transporting equipment to and from the equipment air lock that leads to the exterior loading dock.

Piping to and from the Reactor Building and Hot Cell is double walled, with quick-acting isolation valves located close to the building walls. The piping is routed to the Reactor Building pipe chase in an underground tunnel.

20.2.7.2 Structural

The Tritium Reprocessing Building and the Cryogenics Building are connected to each other and act as one building. The portion of the building subject to potential tritium contamination is a steel-lined, concrete, hardened structure designed for DBE seismic loading. The building outside walls and roof are thick enough to prevent penetration by tornado missiles, to withstand tornado winds and a tornado-induced differential pressure, and to provide adequate shielding. The inside walls, columns, and floors act with the outside walls and roof to transfer all loadings by rigid frame action to the foundation. The base slab acts as the foundation mat, transfering all forces to the supporting soil strata.

20.2.8 Cryogenics Building

The architectural and structural features of the Cryogenics Building are outlined below.

20.2.8.1 Architectural

The Cryogenics Building is relatively simple, consisting of one large room for helium and nitrogen compressors, with an electrical equipment room in an enclosed mezzanine covering one-third of the space below. The remaining cryogenics equipment is located in a fenced-in yard adjacent to the building.

This equipment, along with gaseous helium storage tanks located across the perimeter road, is adequately described on the drawings. An underground tunnel carries liquid helium and nitrogen lines to the Reactor Building pipe chase, where the lines are routed to the reactor hall.

20.2.8.2 Structural

The Cryogenics Building adjoins the Tritium Reprocessing Building and is a steel-framed structure with pre-cast concrete panels on the exterior. The rigid frame design and bracing ensure that horizontal forces are transfered to the foundation. Vertical loadings are supported in the roof by steel beams on columns.

20.2.9 Administration Building

Architectural and structural features of the Administration Building are discussed below.

20.2.9.1 Architectural

Personnel operations for the entire plant are controlled and supervised in the Administration Building. Combined with the Administration Building are the Control Building and the Site Service Building, which are discussed in subsections 20.2.10 and 20.2.11, respectively.

The ground level of the Administration Building consists of a main entrance and reception area, a conference/display room, and various offices arranged on a double corridor system. A lunch room and staff toilets are provided. The facilities provided in the Administration Building are designed to support 60 individuals, the maximum number of operating and maintenance personnel anticipated onsite at any time. The upper level contains electrical and HVAC equipment for both the Administration and Site Service Buildings.

20.2.9.2 Structural

The Administration Building is a combined, steel-framed structure using both rigid frame design and bracing to transfer horizontal forces to the foundation. The building is also attached to the Control Building, where vertical and horizontal loads are supported. Vertical loadings are supported

in the roof by steel beams in the administration area and by trusses in the service area. The supported floor in the administration area is a concrete slab resting on steel decking that is welded to the steel framing, the floor acting as a diaphragm. The columns take the loadings to the foundations that are individual spread footings.

20.2.10 Control Building

The architectural and structural features of the Control Building are discussed below.

20.2.10.1 Architectural

Although visually combined with the Administration Building and Site Service Building, the Control Building is a separate, two-level, hardened structure that is entered only from the rear corridor of the Administration Building. There is an emergency exit on the north side of the building.

The ground level contains the main control room, auxiliary equipment areas, computer equipment room, maintenance and repair shop, tools and parts storage, offices and conference rooms, toilets, and electrical equipment. The upper level contains electrical and HVAC equipment, and an observation gallery above the main control room. The main control room layout depicts anticipated technological advances of the future time for which this plant is intended. An expansion of the operator's console to include several CRTs is envisioned. Instruments and control components are expected to continue their present trends toward miniaturization. The customary cable-spreading area beneath the control room is replaced by an access flooring system. Previously hard-wired controls of the reactor and various systems are replaced by multiplexed signals in a communication tunnel underground to the Reactor Building. Consequently, the relatively large distance from the Reactor Building to the control room is of minimal concern.

20.2.10.2 Structural

The Control Building is a hardened structure designed for DBE seismic loading. The building outside walls and roof are thick enough to prevent penetration by tornado missiles and to withstand tornado winds and a tornado-

induced differential pressure. The inside columns and floors act with the outside walls and roof to transfer all loadings, by rigid frame action, to the foundation. The base slab acts as the foundation mat transfering all forces to the supporting soil strata.

20.2.11 Site Service Building

Architectural and structural features of the Site Service Building are discussed below.

20.2.11.1 Architectural

Combined with the Administration and Control Buildings is the Site Service Building, consisting of a maintenance shop and a warehouse. Repairs and storage of items not directly related to the reactor and its systems are carried out in this building. Each space has a large door opening at the loading entrance, a receiving office, toilet room, and a small storage room. At the opposite end of the maintenance shop are separate rooms for flammable storage and welding. A 10-ton bridge crane travels overhead. In the warehouse forklifts and pallet lifts are used for moving heavy items.

20.2.11.2 Structural

The structural design of the Site Service Building is similar to that of the Administration Building, described in subsection 20.2.9.2.

20.2.12 Onsite AC Power Supply Building

The architectural and structural features of the Onsite AC Power Supply Building are discussed below.

20.2.12.1 Architectural

The building is situated to minimize cable runs to standby power users. Two identical though opposite hand gas turbine generators are located in the hardened one-story building, which is 40-m long by 30-m wide by 10-m high. A fire wall separates the two units, and each unit has a control room, a battery room, and a 10-ton overhead bridge crane. Additional hardening is provided on the south and west walls, which are exposed to a potential low-

trajectory turbine blade missile strike zone. Interlocks on the large sliding doors of this building prevent operation of the turbine unless the doors are closed and locked.

An adjacent two-story structure to the south contains control equipment for the switchyard on the upper level and a cable-spreading room on the ground level.

20.2.12.2 Structural

The gas turbine building is a concrete, hardened structure designed for DBE seismic loading. The building outside walls and roof are thick enough to prevent penetration by tornado missiles and to withstand tornado winds and a tornado-induced differential pressure. The inside walls combine structurally with the outside walls and roof to transfer all loadings by rigid frame action to the foundation. The walls are supported on continuous spread footing foundations, with the gas turbine mat foundations separated from the building foundation. The gas turbine foundations are designed to meet the requirements of the gas turbine manufacturer including an appropriate vibration analysis and DBE seismic analysis.

20.2.13 Security Building

The architectural and structural features of the Security Building are discussed below.

20.2.13.1 Architectural

All traffic to and from the plant is controlled from the Security Building (shown only on the site plan, included in subsection 20.7). Transport and delivery trucks and railroad traffic undergo inspection and identification by security personnel. Plant personnel and visitors must pass through inspection portals and identification devices in the Security Building prior to entering the plant. Radiation monitors ensure that personnel leaving the plant are free from contamination. Identification badges are stored in badge racks in the unsecured area. Closed circuit television monitors of plant-wide operations allow complete visual surveillance. Communication equipment and plant-wide alarm panels are also located in the building.

20.2.13.2 Structural

The Security Building structural design is similar to that of the Administration Building, described in subsection 20.2.9.2.

20.2.14 Pump Houses

Architectural and structural features of the Pump Houses are described below.

20.2.14.1 Architectural

The fire water storage tank pump house is located adjacent to the raw water reservoir, evaporation pond, and fire water storage tank. This structure contains pumps and chlorination facilities for the potable water system and the diesel and motor-driven fire pumps that supply the fire loop.

The circulating water pump house is located near the main cooling towers, and contains pumps and chlorination facilities for the circulating water system. A 20-ton bridge crane travels overhead to assist in the installation and removal of pumps and other equipment.

20.2.14.2 Structural

The circulating water pump house is a steel-framed structure with the crane columns considered fixed at the base laterally and braced longitudinally. Trusses support the roof with top and bottom chord bracing transmitting horizontal loads to the columns. Crane lateral forces are considered supported at the bottom chord by means of bracing to adjacent columns. Wind or seismic loads are taken by rigid frame action laterally and by bracing longitudinally to the pump pit.

The fire water storage tank pump house is a hardened, concrete structure designed for DBE seismic loading. The building outside walls and roof are thick enough to prevent prenetration by tornado missiles and to withstand tornado winds and a tornado-induced differential pressure. The walls and roof act as a rigid frame to transfer structural loadings to the foundation.

20.3 SITE FACILITIES DESIGN

This subsection discusses site development, site utilities, the pump pit, and the facility stack.

20.3.1 Site Development

Site development activities are outlined below.

20.3.1.1 Clearing and Grubbing

The site is first cleared and grubbed, with all extraneous material and obstructions removed.

20.3.1.2 Earthwork

Excavation and disposition of excavated material is required to establish the permanent contours of the site. There is an overall soil erosion program to stabilize the site during construction. The excavation program includes subgrades for railroads and access roads, drainage structures and channels, excavation and drainage for all structures, buildings and foundations, circulating water lines, and other underground lines. Excavated areas are backfilled to required levels with compacted fill. Where suitable, existing onsite soils are used for constructing compacted fills.

20.3.1.3 Roads and Parking

Sufficient roads and parking are provided within the site boundary. Parking is provided outside the boundary close to the Security Building for visitor parking. Roads are two-lane, asphalt-concrete surfaced, with 4-m-wide lanes and 1-m-wide shoulders except where continuous two-way traffic is not required. Service driveways to the different buildings are at least 6-m wide.

20.3.1.4 Yard Fencing

The completed site switchyard and transformer areas are protected by a chain link fence. Visitor and employee parking is located outside the fenced area, with access normally made on foot through a Security Building controlled by guards on a 24-hour basis. The area within the fence is defined

as a restricted area. A check-point system is used for each phase of facility completion, both on the perimeter of and within the facility. The plant layout provides only one normal point of entrance and exit for all but railroad traffic. Emergency exits and service doors are monitored on alarm panels located in the control room and Security Building.

20.3.1.5 Yard Piping

Yard piping includes circulating water, plant service water, standby service water, circulating water makeup and blowdown, standby service water makeup, domestic water, fire protection, sanitary sewage, storm sewage and underground drainage, and miscellaneous piping.

20.3.1.6 Sanitary Sewage Disposal

Sanitary sewage from the entire facility is piped to an existing sewage treatment plant. Building service sewer connections are provided to carry peak flow based on the number of plumbing fixture units in the buildings or the maximum estimated flow based on building occupancy.

20.3.1.7 Subsurface and Surface Drainage

The immediate plant area surrounding the major structures is drained by installing a storm sewer system to convey the runoff into the main drainage ditch. In other areas runoff resulting from rainfall is conveyed to drainage ditches by sloping the tributary surface areas. A system consisting of ditches, culverts, chutes, and chute spillways discharges the storm runoff into the main ditch.

20.3.1.8 Railroad

The railroad spur line is brought into the plant area from the nearest main railroad, assumed to be 8 km from the site boundary.

20.3.2 Site Utilities

Site utilities are those mechanical systems required for the support of normal overall facility operations. The site utility systems include:

1. Raw water system
2. Service water system
3. Auxiliary steam system
4. Domestic water system
5. Potable water system
6. Compressed air system

20.3.2.1 Raw Water System

For the STARFIRE project a large body of fresh water (river, lake, or canal) has been assumed to be located 1.6 km from the site. It has been further assumed that all makeup water requirements are adequately met by the raw water system. The system consists of two full-capacity pumps, located at the intake structure, that deliver raw water through either of two underground pipelines supplying the raw water reservoir, located within the power plant boundary. System redundancy is such that plant shutdowns due to a single failure of water supply components are precluded. In addition, the raw water reservoir is sized to provide 30 minutes of surge capacity to support facility water requirements in the event of total loss of supply from the source.

20.3.2.2 Service Water System

The service water system supplies all plant water requirements (with the exception of the fire protection system) from the raw water reservoir. The principal water user is the circulating water system, to which the service water is supplied at the circulating water pump house pit. The system consists of two full-capacity pumps, a chlorination package, and the necessary piping, valves, and instrumentation and controls to support all plant water supply requirements. The pumps and chlorination package are located in a pump house adjacent to the raw water reservoir.

20.3.2.3 Auxiliary Steam System

An auxiliary steam system is designed to meet all of the plant's heating and hot water requirements. In addition, auxiliary steam is used for

startup of the power conversion cycle. An auxiliary boiler and related components located in the Turbine Building supply the auxiliary steam requirements. Fuel oil is supplied to the auxiliary boilers by an underground oil storage tank and two full-capacity transfer pumps.

20.3.2.4 Domestic Water System

All domestic water requirements are supplied by the service water system.

20.3.2.5 Potable Water System

A potable water system is provided to meet the plant potable water demand. Water supplied by the service water system is processed in the potable water treatment package.

20.3.2.6 Compressed Air System

The compressed air system, that includes the plant air and instrument air subsystems, is designed to provide a reliable supply of dry, clean, oil-free air to hose stations, tools, and pneumatic instruments and controls. The major components of the system are two full-capacity compressors, filters, and holdup tanks. The system provides sufficient air for normal plant operation and maintenance, based on satisfying plant and instrument air needs in accordance with the estimated concurrent demand of each component, all at the required pressure. The plant air subsystem provides a source of backup air supply for the instrument air subsystem to prevent a plant shutdown due to loss of instrument air. Accumulators that are provided in areas where high-volume, short-term usage of instrument air is required can supply air within 1 second at the minimum operating pressure of the equipment.

20.3.3 Pump Pit

The concrete pump pit for the circulating water system is sized for six pumps, separated from each other by concrete walls. Screens prevent trash from entering the pumps, and stop logs allow the pump well to be emptied for

cleanup and maintenance. The pit is designed to support the circulating water pump house and transfer building loads to the supporting soil strata.

20.3.4 Stack

The stack that discharges gaseous effluents from the Reactor Building, Hot Cell, and the Tritium Reprocessing Building is a steel-lined, reinforced concrete outer shell, 100-m high and 14-m in diameter at the base. The concrete shell is of slip-form construction and is supported on an octagonal foundation. The 2-m-minimum-diameter steel liner is supported vertically by a structural steel frame attached to the concrete shell. To allow for the expansion of the liner, the horizontal support of the liner is by means of guides attached to the concrete shell.

20.4 MECHANICAL SYSTEMS DESIGN

This subsection presents the design of the balance of plant mechanical systems required to convert the heat generated by the fusion reactor into electrical energy. It also presents the design of cooling water systems required to maintain reactor plant auxiliary component temperatures within specified limits for all operating modes.

20.4.1 Power Conversion System

The power conversion system consists of components of conventional design for use in large central generating stations. The thermodynamic cycle itself and its components resemble the thermal cycle of a pressurized water reactor plant.

The power conversion system shown schematically in Drawings E-5959-ME-01 and -03 (Figures 20-17, and -19, respectively), included in subsection 20.7, is used to convert the reactor thermal energy to electrical power. The 4000-MW of thermal energy generated by the reactor is transfered to the power conversion system by the heat transport system described in Section 13.

20.4.1.1 Design Basis

The principal functions of the power conversion system are to:

1. Convert the available thermal energy to useful electrical energy at the highest thermodynamic efficiency economically possible.
2. Reject to the atmosphere the non-recoverable thermal energy.
3. Maintain the reactor first wall/blanket and limiter within the specified temperature limits.

The system must satisfy these functions subject to technical, economic, safety, and environmental constraints. The approaches discussed in this section are conceptual, without benefit of optimization and consideration of a broad spectrum of alternatives. In addition, they have been subject only to first-order analysis. However, the design selected is feasible and reasonably economic. Further, the design is comparable to recent designs of similar-sized PWR steam conversion cycles. Codes and standards for a fusion reactor power plant have not yet been developed. However, it is anticipated that the secondary system will have to meet the applicable and relevant criteria of a PWR plant. The secondary system for STARFIRE has been designed with this assumption.

The system described herein and shown on the drawings has an overall thermal efficiency of approximately 34%. In subsection 20.4.1.3 below it is shown how it will be possible to raise this value to 36% by turbine efficiency improvements anticipated by the year 2020.

20.4.1.2 Design Description

The major components of the power conversions system include:

1. Steam generators
2. Turbine generator
3. Main condenser
4. Condensate pumps
5. Steam jet air ejectors
6. Feedwater heaters
7. Feedwater pumps

The system heat balance and schematic representation are shown on Drawings E-5959-ME-01 and -03 (Figures 20-17, and -19, respectively), included in subsection 20.7. System parameters are presented in Table 20-3.

Table 20-3. Power Conversion System Parameters

First wall/blanket heat load	3800 MWt
Limiter heat load	200 MWt
Gross electrical power	1440 MW_e
Gross turbine cycle efficiency	36%[a]
First wall/blanket coolant	Water
Flow rate	58.4×10^6 kg/hr
Inlet temperature	280°C
Outlet temperature	320°C
Coolant pressure	13.8 MPa
Limiter coolant	Water
Flow rate	5.7×10^6 kg/hr
Inlet temperature	115°C
Outlet temperature	145°C
Coolant pressure	4.8 MPa
Steam flow rate	7.43×10^6 kg/hr
Steam temperature	299°C
Steam pressure	6.3 MPa

[a]See subsection 20.4.1.3.

The power conversion cycle, nominally rated at 4000 MWt, is designed to supply steam to a turbine generator rated at 1440 MWe (see subsection 20.4.1.3) for the production of electric power. Steam is produced by thermal energy removed from the reactor coolant system. Main turbine exhaust steam is converted from vapor to condensate in the main condenser. Condensate is returned to each steam generator via the regenerative feedwater heating system after removal of dissolved gases and impurities.

Four steam generators are designed to provide 7.4×10^6 kg/hr of slightly superheated steam at 6.3 MPa and 299°C. The system receives 95% (3800 MWt) of the total heat input from the reactor coolant system at the steam generators. The remaining 5% (200 MWt) of the heat comes from the limiter cooling system, which supplies feedwater heaters #2. Two main steam

lines are provided between the steam generators and the turbine throttle valves. Each steam line is connected to two steam generators, corresponding to one of the two reactor coolant loops. The main steam lines are provided with an isolation valve and a check valve in each line just outside the Reactor Building. The isolation valves automatically close on high steam flow and either low temperature or low pressure simultaneously, and also on high Reactor Building ambient pressure. The valves can be operated remotely from either the main control room or local panels. The swing-type check valves protect against backflow of steam into the steam generator and the Reactor Building in the event a loop is not operating for either maintenance or emergency reasons.

A turbine bypass is provided to control excess steam during startup, shutdown, and during power operation when steam generation temporarily exceeds turbine requirements. The automatic steam dump valves are capable of bypassing up to 45% of design flow to the turbine bypass system and directing it to the main condenser. In connection with the steam dump valves and turbine bypass system, auxiliary feedwater pumps are provided to safely shut down the reactor in the event of a concurrent loss of offsite power and turbine trip. One of the auxiliary feedwater pumps is driven with a steam turbine, while the other two are motor driven, using the standby power source. Turbine plant equipment is selected for high operating efficiency to provide maximum generating capability and reliability. All equipment is designed for continuous operation at 105% of the rated steam flow. The subsystems and/or components that comprise the power conversion system are:

1. Main steam supply system
2. Turbine generator unit
3. Moisture separators/reheaters
4. Main condenser
5. Condensate system
6. Feedwater system

The main steam supply system transports the steam (20.4°C of superheat) from the four steam generators to the high-pressure stage of the main steam turbine's throttle/stop valves. Two pipelines interconnect the four steam generators and supply the steam with the minimum economical pressure losses,

ensuring uniform heat removal from each steam generator, thus maintaining system balance. In addition, the piping arrangement provides for mixing to ensure uniform steam conditions at the inlet to the high-pressure turbine. Branches from the main steam system headers are used to provide heat to the reheaters. The high-pressure turbine exhaust is dried and reheated before entering the low-pressure turbines.

The turbine consists of one double-flow, high-pressure stage in tandem with three double-flow, low-pressure stages. The turbine is a four-casing, 1800-rpm unit with tandem-compound, six-flow exhaust. The unit is provided with two steam chest assemblies, one located on each side of the high-pressure turbines. Each assembly consists of two throttle-stop valves and two governing valves. Each valve is controlled by an electro-hydraulic governing system through an individually operated valve actuator. The generator includes a hydrogen-inner-cooled, synchronous generator, with a water-cooled stator and a shaft-driven, air-cooled, brushless or static exciter. The unit has a power factor of 90%, with a rated output of 26,000 V, three-phase, 60 hz.

Two 50%-capacity moisture separators/reheaters are provided to remove the moisture of the wet steam exhausted by the high-pressure turbine and to reheat the steam, providing approximately 40°C of superheat. The wet steam, at about 8% moisture content, enters the moisture removal section, where 100% of the moisture is removed mechanically and drained to the feedwater system to be used for heating. The dried steam then passes through the two-element reheater section, where it is first heated with extraction steam from the high-pressure turbine and then heated by the main steam. The condensed steam and the moisture removed are used in the feedwater system for heating. The superheated steam from the reheater enters the three low-pressure turbines and the two feedwater pump turbines.

A series multi-pressure condenser, with an approximately 4.5°C temperature rise for each section, is provided for a total rise of about 13.5°C. The steam exhausted from each low-pressure turbine is dedicated to one of the condenser stages, allowing parallel operation between turbine and condenser. Each condenser section is located directly below one of the low-pressure turbine stages, taking the exhausted steam from that particular

turbine stage. The circulating water is connected in series to each condenser stage, i.e., the water passes from one stage to the next. The average back-pressure on the condensing steam is 8.1 kPa, corresponding to a saturation temperature of 42.1°C.

Three pairs of condensate pumps, with each pump sized for 33-1/3% of rated flow, are provided; three pumps are normally operating with the three redundant pumps on standby. Each pair of pumps takes suction from one of the 3 condenser sections, transfering the condensate to the feedwater system. This pump arrangement provides operational and control flexibility. The main function of the system is to condition the condensate by deaeration, polishing, chemical addition, and condensate makeup to provide feedwater at the purity required for the steam generators and to ensure turbine optimum performance and reliability. Gases and air are removed by steam air ejectors and priming ejectors. A demineralizer system, provided for condensate polishing, is capable of removing suspended material such as corrosion products and ionized solids. Chemical addition is provided for pH control and for oxygen scavenging. Condensate makeup is supplied to the condenser hot well from the condensate storage tank. Makeup requirements are controlled by the hot well level.

The feedwater system supplies feedwater to the steam generators at the required flow rate, temperature, and pressure for optimum turbine output and thus cycle efficiency. The system consists of three trains of low-pressure heaters and two trains of high-pressure heaters. Three feedwater pumps are provided, each designed for 50% of the 105% rated capacity. The two pumps normally operating are steam turbine driven, taking steam from the reheaters outlet and exhausting it to the main condenser. The standby feedwater pump is motor driven. The motor-driven pump is used for startup until an adequate steam supply has been established to the turbine driven pump.

Feedwater heating is accomplished by extracting steam from the high- and low-pressure turbines. In addition, feedwater heaters #2 are heated by the 200 MWt available from the limiter cooling system. In total, there are eight sets of heaters, five low-pressure heater sets (three per set), and three high-pressure heater sets (two per set). In addition, two flash tanks are provided to collect the high-pressure heater and moisture separator

drain liquid for return to the system. The flashed steam is used for heating. The feedwater pumps deliver pressurized feedwater at 8 MPa to provide the required 6.3-MPa steam at the turbine throttle valves.

20.4.1.3 Design Alternatives

The overall power conversion cycle efficiency does not depend only on the physics of the thermodynamic cycle, but is also very sensitive to the turbine machinery efficiency. A 34% overall efficiency has been calculated based on turbines available today and widely used for operation with low superheat steam conditions. These turbines are provided with one stage of moisture removal between the casings, and limited internal moisture removal. If it were possible to remove 100% of the moisture available after expansion through every stage, an additional heat rate improvement of about 6% would result.(5)

The addition of moisture removal stages would require a complete redesign of the low-pressure turbine stage, which until today has not been economically attractive for turbine manufacturers. However, it is felt that with increasing fuel costs, the need for higher efficiencies will warrant redesign of low superheat steam turbines. Another factor influencing the redesign of this turbine will be the demand for power plants of the 4000-MWt size.

The 36% overall cycle efficiency projected for STARFIRE is based on three stages of moisture removal, rather than removal at every stage. This is a more reasonable approach to moisture removal that results in the approximately 2% improvement (34% to 36%) in the cycle efficiency cited herein.

The feedwater system selected, namely, three low-pressure heater trains and two high-pressure trains, is also used at the Palos Verde nuclear generating station. Further optimization would involve a study of the economic impact of different concepts, taking into consideration the number of heaters and heater trains, as well as the Turbine Building layout.

Another consideration, which would increase cycle output but not necessarily improve overall efficiency, would be to use the approximately 206 MWt (see subsection 20.4.3.1) of low-temperature heat removed by the closed loop cooling water system portion of the feedwater system. This approach

would require higher temperature limits on the components cooled by the closed loop cooling water system.

20.4.2 Heat Rejection System

This subsection describes the heat rejection system including the main cooling towers and the circulating water system. The heat rejection system is shown schematically on Drawings E-5959-ME-03 and -04 (Figures 20-19, and -20, respectively), included in subsection 20.7.

20.4.2.1 Design Basis

The main function of the heat rejection system is to maintain the most economical condenser back pressure, which is a function of cooling water temperature and flow rate. This very critical economic impact on the power plant must take into account the ecological considerations of rejecting large quantities of heat to the atmosphere.

The cooling method selected is based on economic factors, with the additional assumption that once-through cooling, i.e., river, lake, or sea water, is not available at the majority of potential sites, whereas cooling towers are adaptable to any site. Furthermore, natural draft cooling towers are assumed most acceptable to environmental and regulating agencies and result in lower operating cost than the mechanical draft type. The economic evaluation performed for STARFIRE takes into consideration capital cost (cooling tower, and condenser), operating cost (pumping, and tower fans), and cycle efficiency.

The heat rejection system is also responsible for maintaining cooled components within specified temperature limits during normal plant operation. Cooling water is provided directly to some components, such as plant chillers, and indirectly by the use of an intermediate heat exchanger to other components such as those served by the closed loop cooling water system. Table 20-4 lists the components and heat sources cooled by the circulating water system.

Table 20-4. Circulating Water System Heat Loads

Source	Location	Load (MW)
Main condenser	Turbine Building	2400
Closed loop cooling water system	Plant Auxiliary Building	206
Turbine plant cooling water system	Turbine Building	50
Electrical component loads	Electrical Equipment and RF Power Supply Building	15
Cryogenic systems	Cryogenics Building	1
Instrumentation and controls	Various	Negligible
	Total	2672

20.4.2.2 Design Description

Economic and technical analyses result in the selection of a 1440 MWe turbine generator rating at 8.1 kPa average condenser back pressure. The multi-pressure condenser is cooled with 27.4°C inlet water with a 13.4°C range. The natural draft hyperbolic cooling towers selected use a 4.6°C approach at 22.8°C wet-bulb temperature. The wet-bulb temperature is determined at the 95% duration design point, i.e., 95% of the time the wet bulb is at 22.8°C or below. At higher wet-bulb temperatures, the cycle efficienicy and thus turbine output decrease.

The overall system consists of three hyperbolic natural draft cooling towers; six wet pit, vertical-type centrifugal pumps; a chlorination package; an evaporation pond; and a raw water reservoir for makeup. The cooling towers are constructed with reinforced concrete, approximately 150 m in diameter at the basin, 100 m in diameter at the top, and 165 m in height. The pump house provided for the pumps and chlorination package contains a well with individual compartments for each pump and filter.

Makeup water is supplied to the pump well at a rate controlled by the well level. Makeup is on a continuous basis to replenish the water loss by evaporation and drift and by tower blowdown. Blowdown liquid is routed to the onsite evaporation pond to maintain the proper concentration of minerals in

the circulating water. The makeup and blowdown systems have not been optimized for STARFIRE but a continuous makeup rate of 3% to 5% of the total flow rate has been assumed, which is typical of power plant design. Makeup water is supplied from the raw water reservoir by the service water pumps. The six circulating water pumps are each designed to handle 16.7% of the load, approximately 8400 kg/sec per pump. The pumps take suction from the circulating water pump house well, which is connected to the three tower basins by underground piping. The pump discharge is connected to a common header, which is then routed to an underground concrete pipe to the condenser and back to the cooling towers. If a single pump fails, capability exists to increase the flow rate through the operating pumps to minimize the reduction in overall system flow rate.

20.4.2.3 Design Alternatives

The weather, water availability, water quality and cost, land cost, and environmental regulations collectively determine the type of heat rejection system that is suitable for a specific site. With this data, economic evaluations are performed, leading to the selection of an appropriate system.

An option that has been considered for the STARFIRE project is the use of dry cooling towers. Dry cooling towers have higher initial and operating costs than wet cooling towers, and require more land space than hyperbolic towers. For these reasons, investigation of dry towers was not further pursued for this project. However, dry cooling towers require substantially less makeup water than wet towers, and depending on water cost and availability, could be a feasible option in the future. For the STARFIRE project, economic factors dictate the use of wet cooling towers, and based on an additional economic evaluation, natural draft rather than mechanical draft towers have been selected. The assumed site location for weather considerations is Kansas City, Missouri, and it is further assumed that an adequate water supply is available to support all makeup water requirements. Water cost is not taken into consideration, and therefore an evaporation pond has been selected. However, for a specific site, it may be more economical to treat the tower blowdown and return it to the system, thereby minimizing the makeup rate. This approach could be even more significant in the future, if

there are short water supplies and more stringent environmental regulations are in effect.

The circulating water system pump arrangement selected has no standby capacity at 100% load, which is standard practice for most utilities. Additional installed capacity could be provided at the discretion of the utility purchasing and/or operating a fusion power plant of this type.

20.4.3 Closed Loop Cooling Water System

This subsection describes the closed loop cooling water system, shown schematically on Drawings E-5959-ME-03 and -04 (Figures 20-19, and -20, respectively), included in subsection 20.7.

20.4.3.1 Design Basis

The purpose of the closed loop cooling water system is to provide high-quality, demineralized and deionized cooling water to reactor auxiliary components and Reactor Building cooling systems during normal plant operation. The components served by the system and the corresponding heat loads are indicated in Table 20-5.

Table 20-5. Closed Loop Cooling Water System Heat Loads

Source	Location	Load (MW)
RF system	Reactor hall	28.0
RF system	Reactor Building basement	40.0
RF system	Electrical and RF Power Supply Building	12.0
ATC system	Reactor Building	0.4
ATC system	Hot Cell	0.1
ATC system	Tritium Reprocessing Building	0.1
Shield	Reactor Building	95.0
TF coils	Reactor Building	0.5
EF coils (superconducting)	Reactor Building	0.5
EF coils (normal)	Reactor Building	2.3

Table 20-5 (Contd)

Source	Location	Load (MW)
Cryogenic system	Reactor Building	6.0
HVAC	Reactor Building	5.5
Pumps and miscellaneous	Reactor Building	5.5
Vacuum pumps	Reactor Building	0.1
Storage heaters	Tritium Reprocessing Building	2.0
Pumps	Tritium Reprocessing Building	2.0
Electrolysis units	Tritium Reprocessing Building	0.9
Waste storage	Hot Cell	4.5
Waste processing	Hot Cell	0.1
	Total	205.5

The design pressure of the system is 860 kPa with a design pressure drop of 345 kPa. A 16.7°C temperature difference is used across the components cooled, from an inlet temperature of 43.30°C to an outlet temperature of 60°C. The heat is released from the system to the circulating water system discussed in subsection 20.4.2. The system is designed on the premise that there will be no tritium release to its components during normal operation.

20.4.3.2 Design Description

The closed loop cooling water system consists of three half-capacity pumps, three one-third-capacity heat exchangers, a surge tank, and the necessary piping, controls, and instrumentation. The surge tank is sized to accommodate any volumetric changes due to temperature and load changes. A nitrogen blanket is supplied to the surge tank to maintain system pressure. Nitrogen rather than air is used to minimize oxidation and therefore potential corrosion products that are incompatible with maintenance of the water quality required. Heat is removed from the system at the three heat exchangers by the circulating water system and ultimately rejected to the

main cooling towers. Two of the closed loop water cooling system pumps are normally operating while the third pump is on standby.

Water is continuously bled from the system to maintain the desired water quality and is continuously made up from the demineralized water system. Water quality is monitored to control the bleed rate, while the surge tank level controls the makeup rate. The system is connected to the standby cooling water system to provide cooling water to the atmospheric tritium cleanup systems and the solid waste pools during normal operation. The connections include isolation valves that close automatically when the standby cooling water system goes into operation, or when the closed loop cooling water system is shut down for any reason.

20.4.3.3 Design Alternatives

The closed loop water cooling system rejects all of its heat to the atmosphere via the circulating water system at the cooling towers. If this heat could be used in the power conversion cycle, about 70 MWe of additional output could be obtained from the turbine generator, assuming the same overall efficiency in the power conversion cycle. For this to be feasible, the cooling water temperature would have to be increased to about 46°C to 49°C, and the temperature of the returning heated water would have to be increased to between 66°C to 77°C. A higher return temperature is preferable in terms of interfacing with the power conversion cycle. With a higher temperature range, additional savings would result because of less pumping cost, due to lower flow rates. Whether or not the components served by the closed loop cooling water system could be designed to these higher cooling temperatures could be considered in future investigations.

20.4.4 Standby Cooling Water System

This subsection describes the standby cooling water system, shown schematically on Drawings E-5959-ME-03 and -04 (Figures 20-19, and -20, respectively), included in subsection 20.7.

20.4.4.1 Design Basis

The purpose of the standby cooling water system is to provide high-quality, demineralized and deionized cooling water to the residual heat removal system, atmospheric tritium cleanup systems, solid waste pools, and Control Building chillers during abnormal operating conditions. Operation of the system occurs, for example, during an incident when the reactor has been shut down, offsite power is unavailable, and the plant is using the onsite standby power source. The standby cooling water indirectly maintains the blanket temperature within specified limits by providing the cooling medium to the residual heat removal system that in turn cools the blanket. The residual heat removal system is described in Section 13.

The standby cooling water system also provides cooling water to the three atmospheric tritium cleanup (ATC) systems located in the Reactor Building, the Tritium Reprocessing Building, and the Hot Cell. It is assumed, in sizing the standby cooling water system, that no more than one of the ATC systems will be operating at full load at any time. The largest ATC cooling water load occurs when the Reactor Building ATC system is in the emergency operating mode and the other two ATC systems are operating normally. The components that this system serves and the corresponding heat loads are indicated in Table 20-6.

Table 20-6. Standby Cooling Water System Heat Loads

Source	Location	Load (MW)
Residual heat removal system	Reactor hall	56.0
ATC, full capacity	Reactor hall	4.1
ATC, normal	Hot Cell	0.7
ATC, normal	Tritium Reprocessing Building	0.1
Waste storage	Hot Cell	4.5
HVAC systems	Control Building	0.1
	Total	65.5

20.4.4.2 Design Description

The standby cooling water system consists of a dry cooling tower, two full-capacity pumps, a surge tank, and the necessary piping and instrumentation and controls. When the system is operating from a normal power source, control of the liquid in the surge tank is similar to that for the surge tank in the closed loop cooling water system. When the system is operating on standby power from the onsite gas turbines, no makeup water is introduced into the system. The surge tank is designed with sufficient capacity to supply the water requirements for 30 days of emergency operation.

The dry cooling tower is provided to maintain a closed system. A closed system is desirable to maintain water quality and to prevent the release of small quantities of tritium or activated corrosion products that may migrate to the system. The standby cooling tower is designed to supply cooling water at a temperature of 43.3°C under all weather conditions. The maximum wet-bulb temperature for the Kansas City site is 32.2°C, resulting in a design basis approach to the tower of 11.1°C. A 33.4°C range has been selected for economic reasons, while still maintaining the specified temperature limits for the components cooled. The design pressure of the system is 860 kPa with a design pressure drop of 345 kPa.

20.4.4.3 Design Alternatives

It is possible that the entire standby cooling water system could be incorporated into the closed loop cooling water system. The latter system would require modifications to allow its operation on standby power, but the revised system would still include a cooling tower. For example, it is possible that two circulating water pumps could be provided with standby power and, together with the main cooling towers, be used to provide the cooling medium during abnormal operations. This approach is feasible because the main cooling towers are of the natural draft type and therefore have no electrical power demand. Whether or not the system requires a demineralizer package to maintain water quality during abnormal operations is a subject for future investigation.

20.4.5 Support Systems

This subsection describes the support systems required to sustain reactor and turbine plant operations.

20.4.5.1 Carbon Dioxide Supply System

The carbon dioxide supply system provides the carbon dioxide makeup gas required for the Reactor Building atmosphere. The system consists of high-pressure gas bottles, pressure regulators, piping, valves, and instrumentation and controls. It has been assumed that the user will periodically purchase carbon dioxide gas from a supplier, who will also provide the gas bottles.

20.4.5.2 Sulfur Fluoride Gas Supply System

Sulfur fluoride (SF_6) is used in the rf and ECRH heating systems. The system consists of high-pressure gas bottles, pressure regulators, piping, valves, and instrumentation and controls. The gas and high-pressure bottles are provided in the same manner as the carbon dioxide supply system.

20.4.5.3 Demineralized Water System

The demineralized water system includes packaged demineralized trains, a demineralized water storage tank, and demineralized water pumps. Service water, drawn from the raw water reservoir, is delivered to the demineralizer trains for processing. Two demineralized trains are provided, with one train in the standby, shutdown, or regeneration mode. Each train is sized for 100% design requirements and includes a pressure filter, two-bed cation, and strong base anion primary demineralizer followed by a secondary demineralizer. The demineralized water produced is stored in the demineralized water storage tank, and is used in the heat transport system, the closed loop cooling water system, and the standby cooling water system. Two full-capacity demineralized water pumps are provided for the initial system fill and normal makeup to the following subsystems:

1. Heat transport systems
2. Closed loop cooling water system
3. Standby cooling water system

4. Turbine plant cooling water system
5. Steam and condensate system

20.4.5.4 Turbine Plant Cooling Water System

The turbine plant cooling water system is designed to provide relatively constant temperature water for cooling the turbine cycle equipment. The cooling water serves the following equipment:

1. Generator hydrogen coolers
2. Air compressors
3. Turbine electro-hydraulic controls and lube oil coolers
4. Seal water coolers
5. Plant HVAC
6. Miscellaneous coolers

The system circulates demineralized water that is cooled by the circulating water system. The system consists of two full-capacity pumps, two half-capacity heat exchangers, one surge tank and necessary piping, valves, and instrumentation and controls.

20.4.5.5 Turbine Generator Oil Conditioner and Storage System

The turbine generator oil conditioner and storage system is provided for the storage and processing of turbine lube oil consisting of clean and dirty oil storage tanks of approximately 18,900 liters each, and lube oil transfer pumps. A self-contained lube oil conditioning system is capable of continuous conditioning and recirculation of turbine reservoir lube oil, and batch conditioning and transfer of dirty lube oil. A waste oil sump pump and 950-liter storage tank is provided for the accumulation and disposal of sediment from the dirty oil storage tank.

20.4.5.6 Turbine Generator Lube Oil System

The turbine generator lube oil system consists of an independent lube oil reservoir equipped with lube oil pumps to provide bearing lubrication and lube oil cooling for the turbine generator together with backup supply for the hydrogen seal oil system. Lube oil cooling is accomplished by a heat

exchanger supplied with cooling water from the turbine plant cooling water system.

20.4.5.7 Electro-Hydraulic Control System

The electro-hydraulic control system is an independent system consisting of an oil storage reservoir, motor-operated control oil pumps, and integral oil coolers. The system is designed to provide the motive power required by the servo-mechanisms to maintain desired speed/load characteristics through the turbine steam throttle valves.

20.4.5.8 Hydrogen Seal Oil System

The hydrogen seal oil system provides an independent source of seal oil to the generator shafting to maintain a hydrogen pressure within the casing, with minimal leakage loss. The system has a backup source from the bearing oil supply system and a dc motor-operated seal oil pump for emergency service.

20.4.5.9 Turbine Steam-Sealing System

To prevent the escape of steam and/or loss of condenser vacuum along the turbine shaft, steam-sealed glands are provided. The turbine steam-sealing system consists of steam-sealing regulators, steam-packing ejectors, and gland seal condensers. During startup or shutdown, sealing steam is provided from the main steam line, and during operation, it is provided from the excess steam available from the high-pressure packing. Excess steam is vented to the main condenser, while sealing steam is condensed in the gland seal condenser.

20.4.5.10 Turbine Bypass System

The plant steam cycle is equipped with a 45% reactor-rated turbine steam bypass system that forwards excess main steam directly to the main condenser after a pressure-reducing and desuperheating station. This system is used during startup and shutdown and for those periods during transients when steam generator output exceeds turbine steam flow requirements.

Sequentially operating pressure-reducing desuperheating bypass valves are mounted directly between main steam lines and the main condenser.

20.4.5.11 Condensate Storage and Transfer System

The condensate storage tank provides sufficient water to the suction of the auxiliary feedwater pumps to remove first wall/blanket decay heat and to cool down the components under normal maintenance and service operations. During normal plant operation, the condensate storage tank provides makeup to the system as required.

20.5 BUILDING SERVICES DESIGN

This subsection discusses the HVAC, fire protection, and plumbing systems. HVAC control diagrams (Figures 20-14, -15, and -16) are included in subsection 20.7.

20.5.1 Design Basis

The following subsection provides the design basis for the HVAC systems.

20.5.1.1 Heating, Ventilating and Air Conditioning

The design of this facility incorporates HVAC systems to provide heating, cooling, ventilation, and temperature control for comfort and control of airborne contamination, and to ensure negligible release of tritium to the atmosphere under all operating conditions.

(1) Codes and Standards

Current editions of the documents, guides, standards, and publications of the following organizations are used, where applicable, in the design of the environmental system:

(a) American Society of Heating, Refrigeration and Air Conditioning (ASHRAE)

(b) American Society for Testing and Materials (ASTM)

(c) American National Standards Institute (ANSI)

(d) American Society of Mechanical Engineers (ASME)

(e) Air Conditioning and Refrigeration Institute (ARI)

(f) Air Moving and Conditioning Association (AMCA)

(g) American Conference of Governmental Industrial Hygienists

(h) Underwriters Laboratory (UL)

(i) Sheet Metal and Air Conditioning Contractors National Association (SMACNA)

(2) Environmental Design Conditions

(a) Outdoor Design Conditions:

- Summer: 39°C dry bulb; 20°C wet bulb.
- Winter: (-)23.7°C dry bulb.
- Elevation: 600 m above sea level.

The outdoor design conditions stipulated above are not for any specific location but rather represent design conditions that cover approximately 85% to 90% of the continental United States.

(b) Indoor Design Conditions:

Indoor design conditions are specified in Table 20-7.

(c) Design Leak Rates of Buildings:

- Reactor hall:

  The design leak rate from the reactor hall to the atmosphere during LOCA is 0.1% of the reactor hall volume per day at 165.5 kPa pressure differential.

- Hot Cell:

  The design leak rate from the atmosphere to the Hot Cell is 100% of the Hot Cell net free air volume per day at (-)1.91 cm water gage static pressure differential.

(3) Seismic Classification

The HVAC seismic classifications I, II, and III are defined as follows:

I. Systems, equipment, and components that provide confinement functions to prevent and limit the release and dispersal of radioactive contamination to values comparable with applicable offsite exposure guidelines, or

Table 20-7. Indoor Design Conditions

Location	Temperature (°C) Design Cooling	Temperature (°C) Design Heating	Relative Humidity (%) Design	Static (1) Pressure Design
Reactor Building				
Reactor hall	32.22	26.67	50 to 60	(-)2.54 (4)
Sub-grade level	32.22	18.33	50 to 60	(-)1.27
Hot Cell				
Liquid waste processing	32.22	18.33	50 to 60	(-)1.91
Remote maintenance and repair shop	32.22	18.33	50 to 60	(-)1.91
Spent blanket module and other solid waste process	32.22	18.33	50 to 60	(-)1.91
Center corridor	32.22	18.33	50 to 60	(-)1.27
Decontamination room	32.22	18.33	50 to 60	(-)1.91
Decon equipment room	32.22	18.33	50 to 60	(-)0.64
Hot Cell control room	22.78	22.78	15 ±5	(+)0.64
Tritium Reprocessing and Cryogenics Building				
Tritium reprocessing equipment room	26.67	21.11	40 to 50	(-)1.27
New tritium and deuterium cylinder storage room	32.22	18.33	(3)	(-)0.64
Tritium and deuterium storage	32.22	18.33	(3)	(-)0.64
Monitoring equipment and maintenance room	26.67	21.11	40 to 50	(-)0.64
Analytical laboratory	26.27	21.11	40 to 50	(-)0.64
ATPS equipment room	32.22	18.33	(3)	(-)1.27
HVAC equipment room	32.22	18.33	(3)	(-)0.38
Glove boxes	(2)	(2)	(3)	(-)2.54
Control room	22.78	22.78	45 ±5	(+)0.64
Offices	25.55	21.11	45 ±5	(+)0.64
Cryogenics equipment room	32.22	18.33	(3)	(5)
Electrical equipment room	32.22	18.33	(3)	(5)

Table 20-7 (Contd)

Location	Temperature (°C) Design Cooling	Temperature (°C) Design Heating	Relative Humidity (%) Design	Static (1) Pressure Design
Control Building				
Main control room	22.78	22.78	45 ±5	(+)0.64
Computer room	22.78	22.78	45 ±5	(+)0.64
Offices	25.55	21.11	45 ±5	(+)0.64
HVAC equipment room	32.22	18.33	(3)	(+)0.25
Administration Building				
Offices	25.55	21.11	45 ±5	(5)
HVAC equipment room	25.55	21.11	(3)	(5)
Maintenance Shop	26.67	18.33	(3)	(5)
Warehouse	32.22	18.33	(3)	(5)
Electrical and RF Power Supply Building				
Electrical equipment room	32.22	18.33	40 to 50	(+)0.64
Cable spreading room	26.67	18.33	40 to 50	(+)0.64
RF power supply	26.67	18.33	40 to 50	(+)0.64
On-Site AC Power Building	(6)	18.33	(3)	(+)0.25
Turbine Building				
Turbine room	32.22	26.67	(3)	(-)0.64
Subgrade equipment room	32.22	26.67	(3)	(-)0.64

Table 20-7 (Contd)

Location	Temperature (°C) Design Cooling	Temperature (°C) Design Heating	Relative Humidity (%) Design	Static (1) Pressure Design
Plant Auxiliary Building	32.22	18.33	(3)	(+)0.25
Reactor Service Building	26.67	18.33	(3)	(+)0.25
Switchgear Building	32.22	18.33	(3)	(5)
Pump Houses	(6)	12.78	(3)	(5)

Notes:

(1) Static pressures shown are in centimeters water gage referenced with respect to the atmosphere.

(2) Temperature control is not required.

(3) Humidity control is not needed in this area.

(4) Differential pressure will not be maintained when the atmospheric air cleanup system is operating at full capacity and the reactor hall is isolated.

(5) Differential pressure need not be maintained; building or room pressure is at atmospheric pressure.

(6) Ventilation only provided. Ventilation rate is calculated at a temperature rise of 5.6°C.

Systems, equipment, and components that function to provide a safe shutdown of the facility in the event of a design basis earthquake (DBE), or

Systems, equipment, and components whose continuous operation is not required but whose failure jeopardizes the safety function of an essential safety item.

II. Systems, equipment, and components that could interrupt operation of the facility and are designed to withstand the effects of an operating basis earthquake (OBE).

III. Systems, equipment, and components that are required to perform a safety function, but are designed according to the seismic requirements of the Uniform Building Code.

(4) Design Basis Earthquake (DBE)

The DBE is an earthquake that produces the maximum vibratory motion for which seismic I systems, equipment, and components are designed to perform their safety function. This earthquake is expected to be the largest earthquake that could occur at the site during the life of the plant.

(5) Operating Base Earthquake (OBE)

The OBE is an earthquake that produces a vibratory motion in which defined facility systems are designed to survive and continue to operate without undue risk to the health and safety of the operators and the public.

(6) Design Basis Tornado

Defined HVAC systems are designed to withstand the design basis tornado without loss of confinement capability due to mechanical damage to the system or changes in ambient pressure at the intake and exhaust openings of the affected building. Protection against tornado missiles is provided at the intake and exhaust structures of the affected building.

(7) Filters and Plenums

The HVAC system provides filtration for the outside air intake, recirculation system, and exhaust air system. The sequential filtration methods are reflected on the HVAC Flow Diagrams, included in subsection 20.7.

(8) Filter Elements

The filter elements to be used have the following characteristics:

Filter Element	Maximum Design Flow Rate (cmm)	Initial Air Pressure Drop (cm w.g.)
Prefilter	51.0	0.89
High efficiency filter	51.0	1.52
High efficiency particulate absolute filter	28.3	2.54

(a) Prefilters (PF):

Filters are 61-cm x 61-cm x 5-cm deep, fiberglass, continuously laminated by steel wire grid for support. Filters have a rated average dust spot efficiency of not less than 36% when tested on an NBS-type test for atmospheric dust.

(b) High Efficiency Filters (HEF):

Filters are 61-cm x 61-cm x 5-cm deep. Filters are required to demonstrate a minimum efficiency of 80% when tested on the NBS-type test for atmospheric dust.

(c) High Efficiency Particulate Absolute Filters (HEPA):

Filters are 61-cm x 61-cm x 31-cm deep, nuclear grade, in conformance with the requirements of MIL-F-51068 and HL-586. Minimum efficiency is specified to be 99.97% for 0.3-micron particles.

(d) Plenum Housing:

The design of filter plenums is in accordance with the requirements of recognized standards. Provisions for individual HEPA stage in place DOP testing are required.

(9) Fans

Fans are industrial type, conforming to the AMCA qualification and testing methods, and bear the AMCA Certified Rating seal.

(10) Duct Work

Air distribution duct work is divided into two types. Air ducts that are important to safety are carbon steel all-welded construction. Non-safety related duct work is galvanized steel, constructed according to the SMACNA standards for a medium-pressure system.

20.5.1.2 Fire Protection

The fire protection system for the STARFIRE project incorporates design provisions to achieve the required degree of safety. The defense-in-depth principle is used to achieve an adequate balance in fire prevention, rapid fire detection, fire suppression in the shortest possible time to limit property damage, and design of the plant safety systems to perform their essential safety functions during a fire by providing physical separation and redundancy of components.

(1) Codes and Standards

Standards of the following organizations are used as applicable:

(a) National Fire Protection Association (NFPA)

(b) Factory Mutual Engineering Association (FM)

(c) Underwriters Laboratory (UL)

(d) American Water Works Association (AWWA)

(e) American National Standards Institute (ANSI)

(2) Water Supply and Distribution

A 1140-m^3, seismically qualified underground water storage tank, sized on the basis of the largest expected fire water flow rate for a period of 2 hours is required. The flow rate is based on the following:

(a) 227 m^3/hour for manual hose streams, and

(b) 340 m^3/hour for all sprinkler heads open or operating and flowing in the largest fire area.

The 12-in. underground yard fire main loop is designed to accommodate the maximum flow rate requirement.

(3) Fire Water Pumps

Redundant 100% capacity pumps are required to provide for pressure and/or flow to the system. One pump is driven by a diesel engine, and the other is motor driven. A fire wall with a minimum rating of 3 hours separates the pumps.

(4) Fire Hydrants

Fire hydrants are required every 76 m on the yard main system. The lateral to each hydrant from the yard main is controlled by a visually indicating or key-operated (curb) valve. Threads compatible with those used by the local fire department are provided on all hydrants. A hose house, equipped with hose and combination nozzle and other auxiliary equipment, is required every 305 m.

(5) Water Sprinkler and Hose Standpipe System

Each automatic sprinkler system and manual hose station standpipe has an independent connection to the plant underground water main. Each header leading to the automatic sprinkler system and the hose standpipe system is located in a separate valve room with a 3-hour fire wall. Each header is equipped with an OS&Y gate valve and water flow alarm switch.

(6) Fire Hose Stations

Fire hose stations are equipped with a maximum of 22.9 m of 3.81-cm woven, jacket-lined fire hose and suitable nozzles, and are provided in all buildings. Fire hose stations are located at intervals of no more than 30.5 m.

(7) Fire Extinguishers

Fire extinguishers of appropriate types according to size and nature of the fire are provided in numbers sufficient to ensure efficient and rapid manual fire fighting. Extinguishers are located along escape routes in the vicinity of doors and staircases or at easily accessible locations within the occupied areas.

(8) Interior Protection

Table 20-8 shows the fire zoning requirements, type of protection, and detection system for the facility:

Table 20-8. Fire Zoning Requirements, Type of Protection and Detection System

Zone	Area Covered	Type of Protection	Detection System
1	Reactor hall	(1)	(a) (b)
2	Reactor sub-grade level	(2)	(b)
3	Hot Cell	(1)	(b)
4	Tritium processing area	(1)	(b)
5	Tritium control room	(2) (3)	(c)
6	Balance of Tritium Building floor	(2)	(b)
7	Control/computer rooms	(2) (3)	(c)
8	Balance of Control Building floor	(2)	(b)
9	Administration Building	(2)	(b)
10	Maintenance shop	(2)	(b)
11	Warehouse	(2)	(b)
12	Electrical and RF Power Supply Building, groundfloor	(2)	(b)
13	Electrical and RF Power Supply Building, subgrade level	(2)	(b)
14	Onsite AC Power Supply Building	(4)	(c)
15	Turbine room	(4)	(c)
16	Turbine Building, subgrade level	(2)	(b)
17	Plant Auxiliary and Reactor Service Buildings	(2)	(b)
18	Switchgear Building	(2)	(b)
19	Cooling tower 1	(5)	(a) (b)
20	Cooling tower 2	(5)	(a) (b)
21	Cooling tower 3	(5)	(a) (b)
22	Standby cooling tower	(5)	(a) (b)
23	Yard transformers	(5)	(a) (b)

Table 20-8 (Contd)

Notes:

(1) Preaction-type sprinkler system.

(2) Wet sprinkler system.

(3) Halon 1301 total flooding system.

(4) CO_2 total flooding system.

(5) Deluge system.

(a) Rate of rise with control room alarm.

(b) Flow switch with local and control room alarm.

(c) Ionization with control room alarm.

(9) Fire Detection and Alarm Systems

To achieve a comprehensive fire system for the STARFIRE project, an automated central fire detection and alarm system is required. From each fire area or fire zone equipped with fire fighting installations, status information is supplied to the control room panel. The panel contains space for the following equipment:

(a) Indicator lights showing the automatic and/or manual actuation of fire fighting systems.

(b) Audible alarms with sounds distinct from other audible alarms.

(c) Control instruments for the fire protection portions of the water supply system.

(d) Guaranteed power supply.

(e) Means of verifying the readiness of the fire fighting system and components (supervisory devices).

20.5.1.3 Plumbing

The design of the plumbing systems for this facility is based on the requirements of the Uniform Plumbing Code (UPC) and/or the National Plumbing Code (NPC), whichever is more stringent. The materials of construction meet the requirements of ASTM Standards and/or Federal specifications as applicable.

(1) Plumbing System

The design of the plumbing system covers the following:

(a) A complete sanitary waste and vent piping system for the amenities provided in the facility. Sanitary waste is discharged through a network of yard piping to a sanitary sewage system available at the site boundary.

(b) A complete domestic water system to supply the necessary hot and cold water for the facility. A water heating medium will be selected that provides an economical approach. Systems to be investigated include types using waste heat, conventional heating by electricity and steam, solar energy, or a combination thereof.

(c) Required plumbing fixtures.

20.5.2 Design Description

This subsection describes the HVAC systems. Flow diagrams are included in subsection 20.7.

20.5.2.1 Heating, Ventilating and Air Conditioning (HVAC)

(1) Reactor Building

The reactor hall is provided with six recirculation systems by which the containment atmosphere gas (CO_2) is filtered and conditioned. The tempered gas is supplied throughout the area by distribution duct work. To prevent potential interference with remote handling equipment in the reactor hall, the HVAC system uses an underfloor concrete supply tunnel and vertical risers connected to the horizontal distribution outlets along the Reactor Building walls. The recirculation systems are divided into two groups of three units each, supplied from two different power sources. A total of four units operate normally, and two units are on standby, thereby allowing flexibility of operation during normal, off-normal, and accident conditions. In the event

of a loss-of-coolant accident, the fan coil units are capable of maintaining the temperature of the Reactor Building atmosphere at or below 54.4°C. To ensure even distribution of conditioned air within the confinement space, auxiliary blowers placed at strategic locations are used.

As shown on the Reactor Building HVAC flow diagram, included in section 20.7, the building inlet isolation valve is normally closed and the building exhaust isolation valve is normally open. Clean CO_2 gas is continuously added to the building atmosphere to dilute the small inleakage of air. At the same time, gas is exhausted from the building through two 100% capacity pressure control fans that maintain the reactor hall pressure negative with respect to the environment. When the concentration of tritium within the reactor hall is detected to be above normal, the pressure control fans are de-energized, and automatic isolation of the building takes effect. This calls for automatic shift of the atmospheric air cleanup system from the normal 10% to full capacity operation. The atmospheric cleanup system provides for removal of tritium and/or particulates within the reactor hall. Provision for outdoor air purge of the reactor hall, by opening the building inlet isolation valve, is available if required.

(2) Hot Cell

The Hot Cell employs 100% recirculation of filtered and tempered air to the different zones. Two 100% capacity pressure control fans are provided to maintain differing pressure requirements among confinement zones. The assignment of pressure zones ensures confinement of the potentially contaminated atmosphere and prevents its migration to other parts of the facility. Pressure assignments are such that the flow of air is from areas of lesser to areas of higher potential for radioactive contamination. During normal operation, the atmospheric tritium cleanup system operates at 10% capacity for continuous cleanup of tritium and/or potentially contaminated particulates within the Hot Cell.

The design incorporates isolation of the Hot Cell when it is determined that the concentration of tritium in the Hot Cell atmosphere is beyond the normally acceptable concentration. Upon isolation, the atmospheric tritium cleanup system located inside the Hot Cell runs at full capacity. Provision for outdoor air purge of the Hot Cell is incorporated in the design, thereby providing for the necessary ventilation should man-entry to the cell ever be necessary.

(3) Control Building

The design of the HVAC system for the Control Building consists of two 100% supply air systems and two 100% recirculation/exhaust fan systems. However, redundancy in the air distribution system is not employed. Outdoor air is mixed with return air, which is filtered and tempered for distribution to the different areas of the Control Building. Variable air volume cooling and/or heating is used. The HVAC system is interlocked with the control/computer room Halon 1301 fire protection system by actuation of an outdoor switch. The HVAC system also functions to remove smoke-laden air prior to the entry of fire fighting personnel. The air intake and exhaust structures and equipment are protected from missiles and tornado-induced negative pressurization.

(4) Tritium Reprocessing Building

The tritium reprocessing area, with the highest potential for radioactive contamination within the Tritium Reprocessing Building, is provided with a dedicated recirculating HVAC system. Minimum outdoor purge air for ventilation is filtered and conditioned for supply to the area. As in the Hot Cell and the reactor hall, it is expected that the atmospheric tritium cleanup system will operate at 10% capacity during normal operating modes. Full capacity operation will be in effect upon the detection of an unacceptably high concentration of tritium in the area.

The balance of the building space, consisting of the tritium and deuterium storage area, monitoring equipment and maintenance room, analytical laboratory, and the tritium HVAC equipment room, has a normal outdoor air/recirculation system capable of exhausting air from individual rooms.

(5) Miscellaneous Buildings

The remaining buildings and/or areas of the project have conventional HVAC systems that meet the defined design basis. A maximum of recirculation of conditioned air is used in these buildings.

(6) Chilled Water System

The main Control Building is designed to have two 100% capacity chiller and pump systems, thereby increasing reliability and maintainability, and ensuring continuous operation of the Control Building cooling system. This design is essential for proper functioning of the facility controls and computer. Three chillers provide the necessary cooling for the rest of the facility. Chilled water is delivered through distribution piping equipped with required controls. Three 100% capacity chilled water pumps are provided, two operating and one standby.

(7) Hot Water System

Space heating uses hot water as the heating medium. Hot water is generated through a shell and tube heat exchanger, and is delivered by two pumping systems, one operating and one on standby, through distribution piping to users. Necessary valving and controls are provided.

20.5.2.2 Fire Protection

A dedicated seismically qualified water storage tank for fire protection is provided for the facility. Redundant pumps sized for maximum flow rate based on the design basis fire deliver water through a network of piping to the different areas including yard fire hydrants. Each pipe branch takeoff from the yard main has a post indicator valve with integral supervisory switch for proper monitoring. Fire areas or zones are provided

with fire valves and the necessary supervisory devices to monitor readiness of the fire-fighting equipment and systems. Each building in the facility is equipped with fire hose stations at strategic locations to combat local fires. Each fire hose station is provided with a maximum hose length of 22.8 m, nozzles, and a portable fire extinguisher.

20.5.2.3 Plumbing

Hot and cold water supply is distributed to users as required. The facility design includes floor drains and/or floor sinks in the vicinity of pumps, and other equipment for system drainage and/or for maintenance use. Waste from the facility plumbing fixtures, consisting of water closets, lavatories, urinals, sinks, drains, etc., is collected and routed to the site boundary connection with a sewage disposal facility.

20.6 ELECTRICAL SYSTEMS DESIGN

This subsection presents the electrical systems design. The electrical one-line diagram, E-5959-EE-01 (Figure 20-13), is included in subsection 20.7.

20.6.1 Overall System

The design basis for the overall system is presented below.

20.6.1.1 Design Basis

The functions of the electrical power system are to provide reliable power for the plant equipment, to generate electrical power, and to transmit the net electrical power to the offsite transmission network. The plant is designed with adequate auxiliary electrical equipment, standby power and protection to provide maximum continuity of service and thus ensure operation of the essential station auxiliary equipment during normal operation and all emergency conditions. The design discussed in this section is conceptual, without benefit of optimization and consideration of a broad spectrum of alternatives. Although it has been subject only to first-order analysis, the design selected is feasible and reasonably economic.

The electrical systems design is based on the following considerations:

1. A commitment to personnel safety, and the preservation of property.
2. Reliability and continuity of service.
3. Simplicity of operation.
4. Voltage regulation and short circuit rating of equipment.
5. Maintenance.
6. Flexibility.
7. Environmental constraints.
8. First cost.

Codes and standards for a fusion reactor power plant have not yet been developed. However, it is anticipated that the electrical system design will have to meet the applicable and relevant criteria of a PWR plant. The electrical system for STARFIRE has been designed with this assumption. In addition, all electrical equipment such as the main generator, motors, transformers, switchgear, and control equipment is selected, rated, and specified in accordance with the National Electrical Code (NEC) and with the latest applicable standards of the following institutions:

1. American National Standards Institute (ANSI)
2. Institute of Electrical and Electronics Engineers (IEEE)
3. Insulated Power Cable Engineers Association (IPCEA)
4. National Electrical Manufacturer's Association (NEMA)
5. Occupational Safety and Health Administration (OSHA)
6. Underwriters Laboratories, Inc. (UL)

When it is available offsite power is used for startup and shutdown, i.e., the plant is not designed with "black starting" capability. During continuous operation of the generator an intermediate mechanical energy storage system is not required. Major electrical equipment associated with power generation, auxiliary electrical power supply and distribution, onsite standby power generation, and extra-high voltage (EHV) switchyard systems has been identified and specified (subsection 20.8.5). The specifications indicate that these systems and equipment are within state of the art technology or technology currently being developed.

A double bus system is used as a minimum to supply power to equipment required for continuous operation and/or safe shutdown. The distribution of power to two or more identical items of equipment is such that a failure of a power supply bus does not result in a complete loss of a particular mechanical or electrical function. All vital control and protection systems and equipment are powered from uninterruptible power supply (UPS) systems to ensure maximum service continuity. Electrical equipment and systems required for an orderly and safe shutdown are redundant and are designed to withstand and function during and after a design basis earthquake (DBE).

20.6.1.2 System Description

Descriptions of electrical subsystems are presented in subsequent subsections.

20.6.1.3 Design Alternatives

A detailed analysis of the effects of magnetic and electric fields on the electrical plant equipment and components could indicate that the relocation and rearrangement of some electrical equipment is required. Such an analysis could be the subject of a future investigation.

20.6.2 Main Generator and Connections

The design basis for the main generator and its connections is presented below.

20.6.2.1 Design Basis

The function of the main generator and its connections is to produce 1440-MWe power (gross) for delivery to the plant unit auxiliary transformers, and to deliver the net electrical power through the main step-up transformer and switchyard to the EHV transmission system network. The generator connections are made with a forced cooled indoor/outdoor isolated phase bus system. The isolated phase bus system is fully rated at 40,000 A between the main generator and the main step-up transformers with reduced capacity taps to the unit auxiliary transformers. The generator surge protection equipment and potential transformers are part of the isolated phase bus system.

The main electrical generator is provided with a generator breaker to allow isolation of the generator during startup, shutdown, and maintenance, while the main step-up transformers and the unit auxiliary transformers supply offsite power for the auxiliary system. The generator is provided with primary and backup protective relaying functions. Disconnecting links are provided in the isolated phase buses to allow isolation of the generator breaker and/or the main generator during maintenance. The generator neutral is grounded through a distribution-type transformer and a loading resistor. The generator breaker is controlled remotely from the plant control room, and it is also used for synchronization of the unit with the power grid.

20.6.2.2 Design Description

As shown on the electrical one-line diagram, electrical power is generated at 26 kV and transmitted via an isolated phase bus system to the main step-up and unit auxiliary transformers. The main electrical generator is provided with a generator breaker rated at 48,000 A continuous and 36 kV. The momentary ratings of 1200 kA peak and the interrupting rating of 250 kA, RMS symmetrical are adequate for the maximum available short circuit currents. During normal operation, the generator breaker is closed. During startup and shutdown, the generator breaker is open and offsite power is fed through the main step-up and unit auxiliary transformers. The neutral point of the generator is connected to a single-phase, grounding transformer by a bus connection.

The main step-up transformer bank consists of three single-phase units, each rated at 425 MVA, FOA class at a 65°C temperature rise. The units are connected in a delta (low-voltage side)/grounded wye (high-voltage side) configuration having standard impedances. The low-voltage terminals are connected to the isolated phase buses; the high-voltage terminals are connected via gas-insulated EHV buses through a motor-operated disconnect switch to the switchyard. The main transformer is energized continuously, and it normally delivers power through the unit auxiliary transformers for startup and shutdown. However, during normal operation the main transformer is used to transmit the generator net power output to the EHV switchyard. The main transformer bank is provided with redundant 480-V, 3-phase supplies for the cooling equipment to ensure continuity of service.

20.6.2.3 Design Alternatives

Design alternatives are discussed below.

1. One Large 3-Phase Main Step-Up Transformer

   Although it is possible that future technology and shipping methods will permit the use of one large 3-phase main step-up transformer instead of the 3 single-phase units, the application of a large 3-phase unit was discarded because of inflexibility and the difficulty of providing a spare unit.

2. Main Step-Up Transformer with Direct-Connected Generator

   An alternative scheme without the use of a generator breaker was examined. The scheme shown on the electrical one-line diagram was selected because of:

   a. additional flexibility, and

   b. reduced overall cost in providing a 100% capacity offsite power supply for the unit auxiliaries.

20.6.3 Extra-High Voltage (EHV) Switchyard

The design basis for the EHV switchyard is presented below.

20.6.3.1 Design Basis

It is anticipated that a minimum of two full-capacity EHV transmission lines will be connected to the switchyard of the plant. The primary function of the switchyard is to provide an onsite EHV switching facility that can provide a reliable power outlet for the unit and that can receive and provide the offsite power required for startup and shutdown when the main generator is off the line. The arrangement of the switchyard is based on a double-bus, breaker-and-a-half scheme that provides the utmost flexibility and reliability required for a base load plant of this size and complexity. Outdoor-type gas-insulated equipment is used. This type of equipment offers better protection from the environment and economical use of space. Operation of the switchyard power circuit breakers and motor-operated disconnect switches is accomplished from the supervisory console in the control room or from the control panels in the switchyard control house.

20.6.3.2 Design Description

All three transmission lines, the main step-up transformer, and the three reserve station transformer circuits are connected to the two main buses through two EHV breakers, with the middle breaker shared between two circuits. Each circuit breaker and the three transmission lines have sectionalizing switches installed. All circuit breakers are normally closed and thus the two EHV buses operate in parallel. Any circuit may be isolated (by operating the two adjacent breakers) without loss or interruption of power to any other circuit. In case of a bus fault, the entire bus may be isolated, again without interruption of any other circuit. The transmission line and transformer protective relays, as well as power circuit breaker and motor-operated disconnect switch control equipment, are located in the switchyard control house.

20.6.3.3 Design Alternatives

The following are design alternatives:

1. Open-Type Switchyard

   Open-type switchyard equipment and arrangements were considered. However, it is felt that an arrangement with SF_6 type gas-insulated equipment is more advantageous for the following reasons:

   a. Large space savings.
   b. Better protection against the environment.
   c. Versatility.
   d. Extensive structural support not required.
   e. Effective grounding.
   f. Cost savings.

2. Switchyard Arrangements

   Other switchyard arrangements such as double-bus/double-breaker, and double-bus/single-breaker were considered in place of the breaker-and-a-half scheme. However, the breaker-and-a-half scheme offers the folowing advantages:

   a. Service continuity.
   b. Flexibility.
   c. Reliability.

20.6.4 Auxiliary Electrical Power Supply and AC Distribution

The design basis for the auxiliary electrical power supply and ac distribution system is presented below.

20.6.4.1 Design Basis

1. Functional Requirements

   The function of the auxiliary electrical power supply and ac distribution system is to provide continuous and reliable power to the plant auxiliary equipment for startup, normal operation, and shutdown. During startup, normal operation, and shutdown, power is supplied to the 13.8-kV and 4.16-kV auxiliary system buses from the unit auxiliary transformers connected to the generator lead isolated phase buses. There are four 13.8-kV buses, numbered Bus 1 through Bus 4, from which large motors, coil power supplies, and primary feeders to 480-V load centers are fed. In addition, there are eight 13.8-kV buses, Bus 5 through Bus 12, dedicated to power supply feeders for the rf system. Medium size motors (250 hp to 4000 hp) and drives are fed from the two 4.16-kV buses.

   Each auxiliary electrical power supply bus has two sources of power supply, one from the unit auxiliary transformers and the other from the reserve station service transformers. An automatic power transfer to the reserve station service transformer is implemented when the unit auxiliary power supply fails. Loads and motors between 125 hp and 250 hp are fed from the 480-V load center switchgear. Small loads and motors of up to 100 hp are connected to 480-V motor control centers.

2. Design Criteria

   Electrical loads that are vital for an orderly shutdown of the plant are grouped separately (see subsection 20.6.6 for complete details), and not mixed with normal plant auxiliary loads. The selection of transformer impedances and the grouping of loads on a particular switchgear bus are consistent with commercially available switchgear ratings and ANSI voltage regulation limits.

The short circuit current at the primary of each unit auxiliary transformer is limited to a maximum of 40,000 A to allow the use of breakers with standard ratings.

It is assumed that harmonic suppression, filters, and power factor correction for the coil and rf power supplies are included in these power supplies, as required. Feeders to coil and rf power supplies are duplicated or divided so that a single switchgear bus or feeder failure does not result in loss of a function. For example, there are eight switchgear buses serving the rf power supplies. Loss of any one of these buses does not result in the loss of more than one-eighth of the total number of individual rf power supplies. Double-ended load center transformers rated at 480 V are designed so that a failure of any one of them does not cause loss of the associated 480-V bus. The bus tie-breaker automatically connects the "dead bus" to the other operating bus. A minimum of local controls is provided for. In general, circuit protection equipment is located on the switchgear cubicles, and control devices and functions are located in the plant control room.

20.6.4.2 Design Description

The auxiliary electrical power supply and distribution system is shown on the electrical single-line diagram. This system consists of twelve 13.8-kV, six 4.16-kV, and ten double-ended 480-V load center buses, and a number of 480-V motor control center buses, as required.

1. Unit Auxiliary, Reserve Station Transformers, and Switchgear

Normal power to the switchgear buses during operation is supplied from the unit auxiliary transformers. There are three 90-MVA transformers with double 13.8-kV secondary windings. These each feed a 13.8-kV switchgear bus servicing general motor and unit substation loads. In addition, there are two 90-MVA transformers provided with double 13.8-kV secondary windings. These each feed two 13.8-kV switchgear buses dedicated to the rf power supplies. The two 4160-V main switchgear buses are fed from a 40-MVA, double

secondary winding transformer. The switchgear bus assemblies rated at 4160-V serving different process building loads are subfed from the main 4160-V switchgear. Each unit auxiliary transformer is protected by a 26-kV primary circuit breaker preceded by a disconnecting link, reactor, and motor-operated disconnect switch for short circuit current limitation and isolation. Backup power to the switchgear buses is provided from the three reserve station service transformers. Two of these transformers are rated at 90 MVA with double 13.8-kV secondary windings, and one is rated at 40 MVA with double 4160-V secondary windings.

2. 480-V Power Supplies

Power at 480 V is provided by double-ended load center type substations located throughout the plant approximately in the center of their respective loads. Each transformer of a double-ended unit is fed from a different 13.8-kV bus for better flexibility and service continuity. Loads above 100 hp but below 250 hp are connected to these load center switchgear buses as well as 480-V motor control center feeders. Loads of up to and including 100 hp are fed from 480-V motor control centers located throughout the plant near to the center of their respective loads, as required.

20.6.4.3 Design Alternatives

Although alternative arrangements were briefly examined and some degree of optimization was accomplished, a complete study to determine the most suitable system and arrangements could be performed as part of a future investigation.

20.6.5 Direct Current (DC) Systems and AC Uninterruptible Power Supply (UPS) Systems

The design basis for these systems is presented below.

20.6.5.1 Design Basis

1. General

Reliable and continuous dc battery power is required for a variety of uses, such as "trip" and "close" of electrically operated circuit breakers, solenoid-operated valves, control systems, vital lighting, the station annunciators, communication equipment, and devices used during turbine coast-down. Through dc/ac inverters, the batteries are also used to provide power to the turbine-generator and reactor protective system, and to instrumentation required for an orderly shutdown. The following separate subsystems are provided:

a. Turbine-generator dc system.

b. Instrumentation and control dc and UPS systems.

c. Computer/data logger dc and UPS systems.

d. Switchyard dc system.

UPS systems are provided with fast transfer switches to transfer the load from the output of the inverter to a regulated ac backup supply in case of inverter failure, feeder short circuit or maintenance.

2. Turbine-Generator DC System

The function of the turbine-generator dc system is to provide dc supply for the turbine-generator and its accessories as required, and for emergency lighting. This battery is rated at 250 V, and is adequately sized to supply the total connected load for 2 hours without the support of a charger. Two chargers are provided for this battery.

3. Instrumentation and Control DC and UPS System

The function of the instrumentation and control dc and UPS system is to provide dc supply for the plant instrumentation, control and protection systems, including switchgear dc control supplies and dc/ac inverter supplies. The system consists of four separate battery subsystems, each rated at 125 V dc, and adequately sized to supply the total connected load for 4 hours without the support

of a charger. One charger is provided for each battery and one dc/ac inverter is fed from each battery. This system is designed to withstand DBE seismic forces.

4. Computer/Data Logger DC and UPS System

   The function of the computer/data logger dc and UPS system is to provide dc/ac supply for the plant computer/data logger. This system consists of two dc batteries, three chargers, and two dc/ac inverters. These batteries are sized for 2-hours' capacity without the support of a charger.

5. Switchyard DC System

   The function of the switchyard dc system is to provide dc supply for the control and protection of the switchyard circuit breakers and for the switchyard emergency lighting. This system consists of two separate battery systems, each complete with a charger, plus a spare charger. Each of these batteries is sized for 2-hours' capacity without the support of a charger.

20.6.5.2 Design Description

These battery and UPS systems consist of a storage battery, charger(s), inverter, fast transfer switch, manual bypass switch, dc switchgear or distribution panelboard, ac panelboard, and regulated backup ac supply. The charger ac input power is normally supplied at 480 V and is connected to a bus that could also be energized from the onsite standby electrical power system when all offsite ac power is lost. During normal operation the charger supplies dc power to the connected loads with the battery fully charged and floating on the dc system bus. When the charger is lost because of its own failure or because of a loss of ac input to the charger, the battery powers the dc system for the design period, as required.

20.6.5.3 Design Alternatives

Since the above-described basic systems are very reliable and are standard systems widely used by the industry, no alternative systems were studied. However, an optimization study could be performed in the future.

20.6.6 Onsite Standby AC Power System

The design basis for the onsite standby ac power system is presented below.

20.6.6.1 Design Basis

1. General

   The function of the onsite standby ac power system is to generate and distribute a reliable onsite ac source of auxiliary power if the preferred offsite source is lost. This system consists of two 100% redundant, independent, and separate onsite gas-turbine generators. Each generator is connected to a pair of redundant 4.16-kV switchgear bus systems as shown on the electrical single-line diagram. The connected loads on these buses consist of equipment and systems required for an orderly shutdown of the plant. The system is designed to meet the following requirements:

   a. Capability to function during and after a design basis earthquake.

   b. Loss of one redundant group does not prevent an orderly shutdown.

   c. Each 4.16-kV bus system can be connected to the preferred (offsite) power source or to the onsite standby gas-turbine generator.

   d. No paralleling of the two redundant generators or 4.16-kV bus system is possible.

   e. Loads cannot be transfered from one bus system to the others.

2. Gas-Turbine Generators

   The gas-turbine generators are designed for starting and loading within about 60 seconds. They are required to start automatically upon loss of the ac bus voltage and to maintain rated voltage and frequency during loading and operation. Provisions are made for testing the gas-turbine generators at required time intervals.

20.6.6.2 Design Description

The onsite standby ac power system consists of two redundant gas-turbine generators, each connected to a separate 4160-V switchgear bus, numbered HSBE-1 and -2, respectively. These two 4160-V buses are also connected to the plant main 4160-V buses 1 and 2, respectively. Sub-bus assemblies rated at 4160 V that are fed from buses HSBE-1 and -2 are located in the Reactor Building, Hot Cell, and reactor supporting buildings for the supply of onsite standby power to equipment in these buildings.

During normal conditions these systems are powered from the preferred source, which is the offsite source, or from the unit auxiliary transformer. However, upon loss of the plant main ac generator and upon loss of the offsite ac power source, the gas-turbine generators feed the onsite standby ac power system to permit an orderly shutdown to be conducted. Onsite standby ac power rated at 480 V is provided by 480-V load centers connected to the 4160-V standby ac power system buses. Onsite standby ac power is further distributed to small motor loads by 480-V motor control centers connected to the 480-V load centers.

20.6.6.3 Design Alternatives

An alternative method of generating onsite standby ac power by diesel-electric generators was examined. Approximately six diesel generators of the "fast" starting type rated at 2800 kW would be required to serve the entire load for this system. The decision to select two gas-turbine generators was made for the following reasons:

1. Simplicity.
2. Relatively higher reliability in starting.
3. Less initial cost.
4. Lower maintenance cost.
5. Longer mean-time between failures.

20.6.7 Facilities Electrical Services

The design basis for the facilities electrical services is presented below.

20.6.7.1 Design Basis

The functions of the facilities electrical services are as follows:

1. To provide adequate lighting including emergency lighting in accordance with the recommendations of the Illuminating Engineering Society (IES).
2. To provide the necessary grounding for systems and equipment, including a separate grounding system for "low" signal level instrumentation and controls, in accordance with the requirements of IEEE standards and the National Electrical Code.
3. To provide necessary systems for communication, including telephone, public address (PA and PAX), and sound-powered telephone systems for testing and maintenance where required.
4. To provide adequate lightning protection.
5. To provide necessary cathodic protection.
6. To provide necessary electrical heat tracing and freeze protection.

20.6.7.2 Design Description

1. Lighting

Lighting and low-energy auxiliary loads are supplied from the 120/208-V or 277/480-V solidly grounded lighting system. Lighting for each plant operating area is supplied from at least two circuits, possibly fed from separate power sources to prevent complete loss of lighting on failure of equipment or wiring. For exits and critical areas, emergency lighting circuits are transfered automatically to the 125-V dc system upon loss of the normal source. Outdoor lighting is provided for operating areas, with parking lot lighting and road lighting included. Aircraft obstruction lighting for the cooling towers and stack is furnished in accordance with Federal Aviation Agency (FAA) regulations. Lighting systems provide maintained lux levels at least equal to the minimum recommendations of the IES. Lighting fixtures using

fluorescent sodium or mercury vapor lamps are installed where feasible.

Emergency lighting is incandescent so that it may be supplied by alternating current during normal operation and from direct current during emergencies. Emergency lighting is provided in the plant at stairways, exits, the turbine room operating floor, the main control room, and at motor control and switchgear areas. Electric convenience outlets, including welding outlets, are provided throughout the plant, and where feasible are located so that a 7.6-m extension cord can reach any area. Lighting-fixture mounting height and spacing do not exceed the manufacturer recommendations except where physical constraints require some deviation.

2. Grounding System

The ground grid consists of buried bare copper cable meshes and copperclad steel ground rods driven below the water table low level. Switchgear, load centers, motor control centers, power transformers, power supplies, exciter, generator, neutral cubicle, generator potential transformer cubicles, and alternate building and corner columns are connected by cable to the ground grid. All power utilization equipment is connected either to the ground grid directly or to the nearest building steel. Piping systems are grounded through connections to tanks and vessels. Each cable tray or stack of trays is provided with a ground cable running full length. Metallic conduits are grounded at equipment enclosures and, where entering cable trays, are connected to the tray ground cable. All embedded or buried ground connections are thermit brazed. Equipment connections are exposed and bolted. Fences are connected to a buried ground cable running the full length of the fences. Switchyard grounding systems are also provided.

3. Communication Systems

Telephone sets, public address systems, and all wiring and raceways are provided for intraplant communications. All

locations, including the switchyard and outlying areas as dictated by the overall plant operation requirements, are covered. A sound-powered telephone system is provided for testing and maintenance purposes. It is installed in the main control room, cable spreading room, switchyard, switchgear area, reactor area, and at local panels.

4. Lightning Protection

Lightning protection for the power plant is provided by lightning rods located on tall buildings and/or structures with cable connections to ground rods.

5. Cathodic Protection Systems

Provisions are made for cathodic protection of all buried steel piping. Cathodic protection of building steel or reinforcing steel is provided, if necessary. All buried steel lines are connected by cable to each other and to the ground grid. Buried sections of lines are insulated from above-grade sections with insulating flanges at the entrance to buildings or structures. Lines less than 152 m in length are provided with one test connection accessible above grade. For lines 152 m in length or over, accessible test connections are installed at each end and, where required, at intermediate points. Connecting cables are insulated copper suitable for direct burial. Connections are thermit brazed directly to the lines where line pressure permits; otherwise, a welded lug is furnished on the line for the brazed cable connection. A cathodic protection system is provided for the traveling-water screens in the intake structure and for the condenser water boxes, as required.

6. Electrical Heating

Electrical trace heating is provided for equipment and in areas where temperature maintenance is required. Electrical space heaters are provided in equipment enclosures to protect against condensation.

20.6.7.3 Design Alternatives

Design alternatives for lighting, grounding, communications, lightning, and cathodic protection can be studied at a future date to optimize the systems and their services, and to minimize costs.

20.6.8 Electrical Equipment Arrangements, Raceway and Cable Systems

The design basis for the electrical equipment arrangements, raceways, and cable systems follows.

20.6.8.1 Design Basis

Electrical equipment is arranged and located logically to minimize length of runs for interconnections and to facilitate maintenance and testing. Major electrical equipment is located in separate electrical rooms with adequate space provided for possible future extensions and cable and raceway connections and with adequate mechanical and environmental protection. Raceways are grouped where practical for ease of installation and common mechanical protection. During the allocation of space for major raceway systems, adequate consideration was given to the problem of electrical interference between the different types of cables and high voltage and/or heavy current equipment. Raceways are dedicated to the particular type of cable system, and those containing different types of cable are separated. Raceways and cables serving the onsite standby ac power systems and associated with redundant equipment required for an orderly shutdown are physically separated and isolated from their redundant counterparts, and are designed to withstand DBE seismic forces.

In addition to transmitting electric power from the proper source to the designated load device, these facilities must be of a type and be properly installed and segregated to function during all modes of operation and shutdown. The electrical loadings of conductors do not exceed, and are generally less than, the ampacities recommended by AIEE-IPCEA "Power Cable Ampacities." The percentage cross-section fill of wireways is governed by the allowable cable ampacities. The physical support of wireways meets the recommendations of the National Electrical Code. All cables have a sufficient degree of flame resistance to obviate the need for flame-retardant coating or special fire extinguishing systems.

20.6.8.2 Design Description

1. Electrical Equipment Arrangements

The main electrical system 13.8-kV and 4160-V switchgear equipment is located in a switchgear room next to the turbine-generator building at the northeast end. The unit auxiliary and reserve station transformers are located in close proximity to the main electrical switchgear room to minimize the lengths of the main incoming feeders. In addition, load centers and 480-V motor control centers are placed in this room to serve the turbine-generator building load. The onsite standby electrical gas-turbine generators are located east of the main electrical equipment room, also within close proximity. Other electrical equipment rooms that contain electrical switchgear, load centers, and motor control centers are located in the Reactor Building, Hot Cell, and reactor support buildings to serve loads within these respective buildings. Electrical switchgear required to supply power to the rf and ECRH power supplies is located in the Electrical Equipment and RF Power Supply Building. The unit auxiliary transformers and the main step-up transformers are located eastward from the main generator and as close as possible to it, to minimize the length of the isolated phase bus ducts.

2. Raceway Systems

To the extent possible and practical, continuous rigid galvanized steel or aluminum cable supports (cable trays) are used. The use of underground or trenched raceways is minimized except where practicality and economy are in favor of these two types of raceway systems. The raceway system is made up of cable trays, conduits, and underground ducts, with the electrical cables contained therein. Cable trays are of galvanized steel, ladder type or solid bottom, with solid covers where required. Hangers for trays carrying vital circuits are designed to withstand DBE seismic disturbances. Conduits are galvanized rigid steel where embedded in reinforced concrete in building slabs. The duct banks are heavily reinforced and will withstand a DBE seismic

disturbance. In the switchyard, cable trays and/or trenches are used for raceways for control, instrumentation, monitoring, and protection cables. In general, cables for power, control, and instrumentation are run in cable trays with connections from the tray to equipment and devices made with exposed rigid-steel conduits.

3. Cable Systems

Power cables for 13.8-kV and 4160-V service are single or three conductors, rated at 15 kV and 5 kV, respectively, and suitable for ungrounded neutral service. The conductors are stranded copper, EPR or XLP insulated, rated 90°C temperature, shielded, and provided with a hypalon or neoprene outer jacket. The minimum sizes are determined on the basis of thermal and/or short circuit rating required for a particular service. Power cables for 480-V service are single or three conductors, rated 600 V. The conductors are stranded copper, EPR or XLP insulated, rated 90°C copper temperature, with a hypalon or neoprene outer jacket. The conductor size is No. 12 AWG minimum.

Control cables are single or multiconductor, rated 600 V, EPR or XLP insulated, rated for 90°C copper temperature with an overall hypalon or neoprene jacket. The control cable conductor size is No. 14 AWG, except for potential and current transformer circuits used for metering and protection, for which the conductor size is No. 10 AWG. Cables for service voltages over 50 V are type "TC" approved for installation in ladder-type cable trays.

Thermocouple extension wires are single and multipair with insulation 300 V class, and shielded overall with a neoprene or hypalon jacket. Lighting wires are single conductor, 600 V, type THW. Other types of insulated cables, such as for abnormally hot locations and intercommunications, are supplied to serve the particular applications. Instrumentation cables are EPR or cross-linked 300 V class polyethylene-insulated, single-shielded, twisted-pair, multiple-twisted pairs with shielding overall,

shielded-twisted triple, or multiconductor with shielding overall. Cables have nonflammable (hypalon or neoprene) jacket overall. All multiconductor control wiring is color-coded, and the color of each control wire will be shown on the connection diagrams.

20.6.8.3 Design Alternatives

Design alternatives for electrical equipment arrangements, raceway, and cable systems could be studied later, to optimize these systems and to minimize costs.

20.7 DRAWINGS

This subsection contains the conceptual design drawings for this report. The subject drawings are listed below:

Drawing	Title
E-5959-AR-01	ARCHITECTURAL
(Figure 20-6)	Fusion Power Plant
	Site Plan
E-5959-AR-02	ARCHITECTURAL
(Figure 20-7)	Reactor, Turbine & Support, Electrical & RF Power Supply & Onsite A/C Power Buildings
	Sub-Grade Level Plans
E-5959-AR-03	ARCHITECTURAL
(Figure 20-8)	Reactor, Turbine & Support, Electrical & RF Power Supply & Onsite A/C Power Buildings
	Ground Level Plans
E-5959-AR-04	ARCHITECTURAL
(Figure 20-9)	Reactor, Turbine & Support, Electrical & RF Power Supply & Onsite A/C Power Buildings
	Upper Level Plans
E-5959-AR-05	ARCHITECTURAL
(Figure 20-10)	Reactor, Turbine & Support, Electrical & RF Power Supply & Onsite A/C Power Buildings
	Building Sections

Drawing	Title
E-5959-AR-06	ARCHITECTURAL
(Figure 20-11)	Tritium Reprocessing & Cryogenics Building, Administration, Control & Site Service Building
	Ground & Upper Level Plans, Sections
E-5959-AR-07	ARCHITECTURAL
(Figure 20-12)	Fusion Power Plant
	Site Perspective
E-5959-EE-01	ELECTRICAL
(Figure 20-13)	Unit Generator and Auxiliary Power System
	One Line Diagram
E-5959-HV-01	BUILDING SERVICES
(Figure 20-14)	Reactor Building
	HVAC Flow Diagram
E-5959-HV-02	BUILDING SERVICES
(Figure 20-15)	Tritium Reprocessing Building
	HVAC Flow Diagram
E-5959-HV-03	BUILDING SERVICES
(Figure 20-16)	Hot Cell & Radioactive Waste Processing System
	HVAC Flow Diagram
E-5959-ME-01	MECHANICAL
(Figure 20-17)	Power Conversion Cycle
	Heat Balance
E-5959-ME-02	MECHANICAL
(Figure 20-18)	Reactor and Support Systems
	Block Diagram
E-5959-ME-03	MECHANICAL
(Figure 20-19)	Power Conversion System & Cooling Water Composite
	Flow Diagram
E-5959-ME-04	MECHANICAL
(Figure 20-20)	Essential Cooling Water Systems
	Flow Diagram

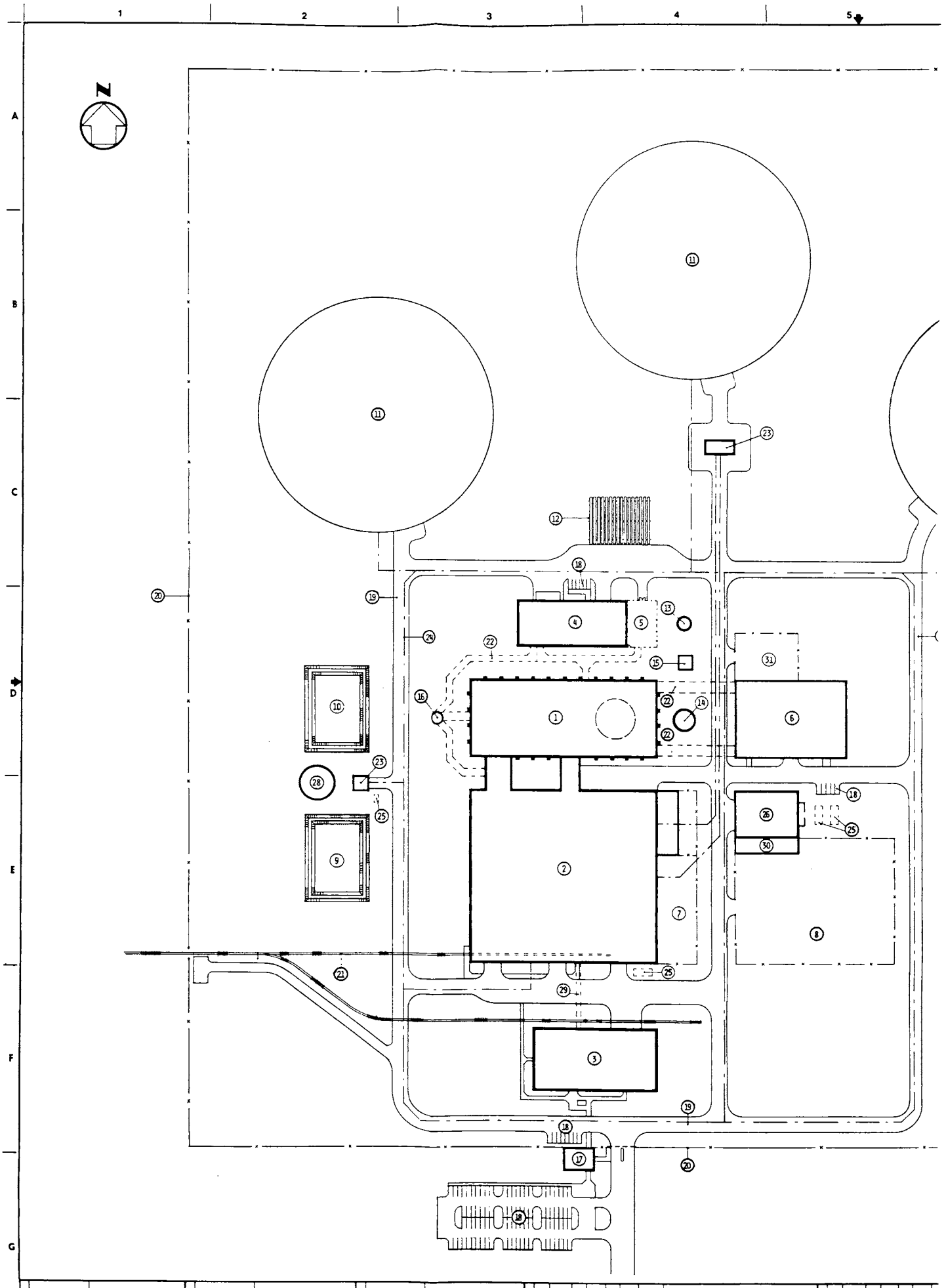

REFERENCES		REFERENCES		REFERENCES		REVISIONS										REVISIONS							
DRAWING NO	DESCRIPTION	DRAWING NO	DESCRIPTION	DRAWING NO	DESCRIPTION	NO	DATE	BY	CHKD	SEC	PROJ	CLIENT	DESCRIPTION			NO	DATE	BY	CHKD	SEC	PROJ	CL	
																B	3-29-88	CTD	DK				
																A	3-24-88						

ENG-GE-24 (11/78)

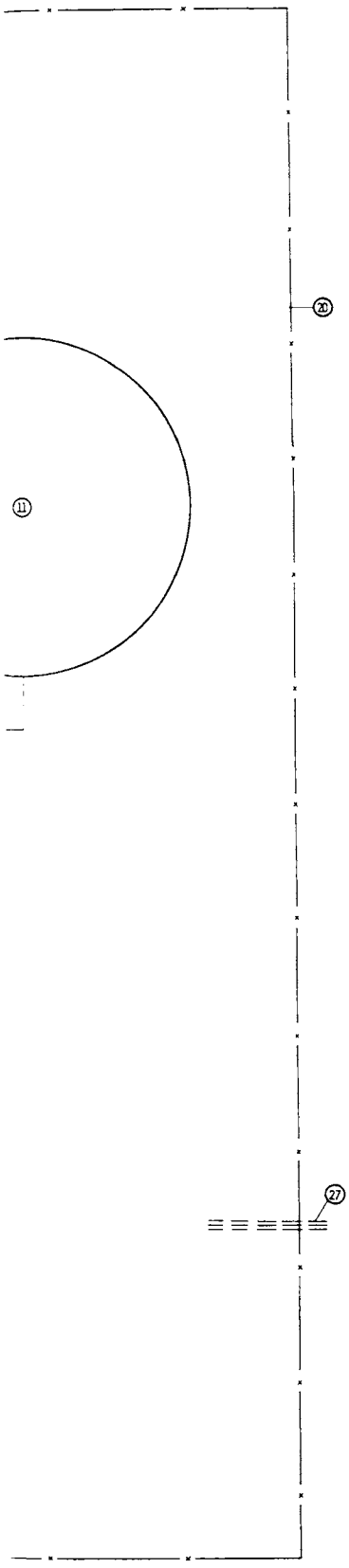

LEGEND

1. REACTOR BUILDING
2. TURBINE & SUPPORT BUILDING
3. ADMINISTRATION, CONTROL, & SITE SERVICE BUILDING
4. TRITIUM REPROCESSING & CRYOGENICS BUILDING
5. CRYOGENICS EQUIPMENT YARD
6. ELECTRICAL & RF POWER SUPPLY BUILDING
7. TRANSFORMER YARD
8. MAIN SWITCHYARD
9. RAW WATER RESERVOIR
10. EVAPORATION POND
11. MAIN COOLING TOWERS
12. HELIUM GAS STORAGE TANKS
13. PRIMARY WATER STORAGE TANK
14. CONDENSATE STORAGE TANK
15. COOLING TOWER (FOR RESIDUAL HEAT REMOVAL)
16. STACK
17. SECURITY BUILDING
18. PARKING
19. PERIMETER ROAD
20. PERIMETER FENCE
21. RAILROAD SPUR
22. TUNNEL
23. PUMP HOUSE
24. FIRE LOOP
25. FUEL OIL STORAGE TANK
26. ON SITE AC POWER SUPPLY
27. OFF SITE POWER SUPPLY
28. FIRE WATER STORAGE TANK
29. CONTROL TUNNEL
30. SWITCHYARD CONTROL
31. RF POWER SUPPLY SUBSTATION

1:1000

ARGONNE NATIONAL LABORATORY
ARGONNE, ILLINOIS
STARFIRE COMMERCIAL TOKAMAK REACTOR

DESCRIPTION		
PAR FINAL REPORT	APVD PROJ MGR	7-21-80
PAR CLIENT APPROVAL	APVD MGR	7-29-80

THE RALPH M. PARSONS COMPANY
PASADENA CALIFORNIA

TITLE: ARCHITECTURAL
FUSION POWER PLANT
SITE PLAN

SCALE: 1 : 1000 | ACCOUNT NUMBER: — | JOB NUMBER: 5959-1
DOCUMENT NUMBER: E-5959-AR-01

Figure 20-6

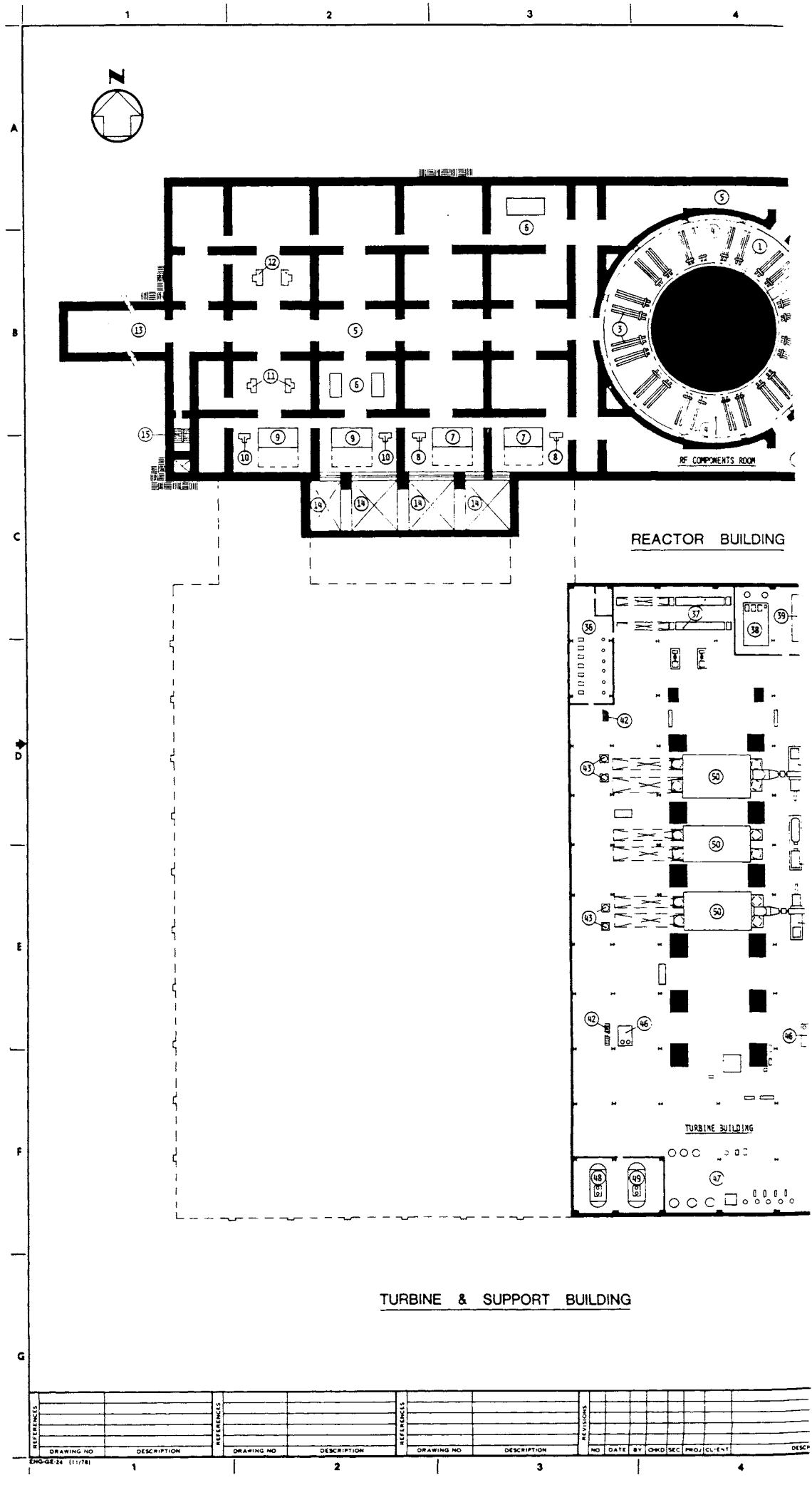
N
RF COMPONENTS ROOM
REACTOR BUILDING
TURBINE BUILDING
TURBINE & SUPPORT BUILDING
REFERENCES
DRAWING NO
DESCRIPTION
REVISIONS
NO
DATE
BY
CHKD
SEC
PROJ
CLIENT
ENG-GE-24 (11/78)

Figure 20-7

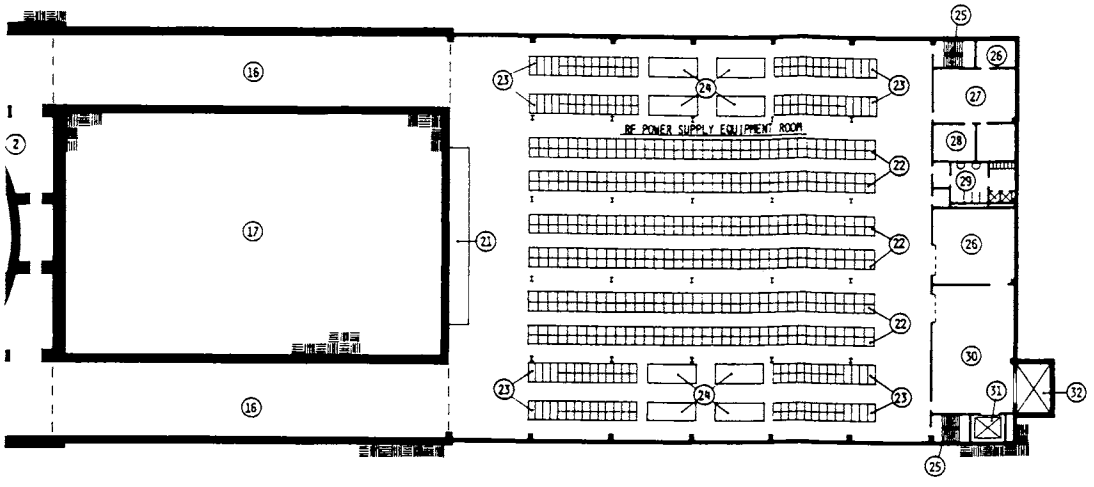

ELECTRICAL & RF POWER SUPPLY BUILDING

LEGEND

REACTOR BUILDING

1. CONCRETE SUPPORT PEDESTAL
2. 5 TON BRIDGE CRANE
3. RF COMPONENTS
4. RF DUCT
5. CORRIDOR
6. ELECTRICAL EQUIPMENT
7. SUB-GRADE LEVEL AIR COOLING SYSTEM
8. RECIRCULATING/EXHAUST FAN
9. OUTDOOR AIR PURGE SYSTEM
10. SUPPLY FAN
11. PRESSURE CONTROL FANS
12. OUTDOOR AIR PURGE EXHAUST
13. TUNNEL TO STACK
14. AREAWAY
15. STAIR
16. TUNNEL TO RF POWER SUPPLY EQUIPMENT ROOM
17. UNEXCAVATED
18. NOT USED
19. NOT USED
20. NOT USED

ELECTRICAL & RF POWER SUPPLY BUILDING

21. ECRH EQUIPMENT SWITCHGEAR
22. RF POWER SUPPLY MODULES
23. 13.8 kV SWITCHGEAR
24. 480 V. LOAD CENTER
25. STAIR
26. STORAGE
27. CONTROL/MONITOR ROOM
28. OFFICE
29. TOILET/SHOWER/LOCKERS
30. MAINTENANCE & REPAIR SHOP
31. FREIGHT ELEVATOR
32. AREAWAY
33. NOT USED
34. NOT USED
35. NOT USED

TURBINE & SUPPORT BUILDING

36. CHEMICAL EQUIPMENT ROOM
37. TURBINE PLANT HEAT EXCHANGER
38. LUBE OIL RESERVOIR
39. LUBE OIL CONDITIONER
40. BATTERY ROOM
41. CABLE SPREADING ROOM
42. STAIR
43. CONDENSATE PUMPS
44. MOTOR DRIVEN FEEDWATER PUMPS
45. TURBINE DRIVEN FEEDWATER PUMPS
46. SUMP
47. DEMINERALIZER AREA
48. ACID TANK
49. CAUSTIC TANK
50. CONDENSER

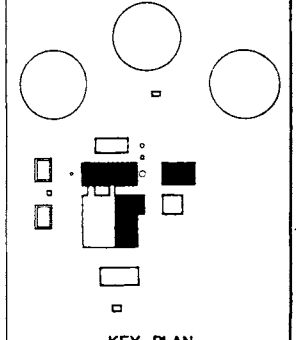

KEY PLAN

NO.	DATE	BY	CHKD	SEC	PROJ	CLIENT	DESCRIPTION
B	9-21-80	C.T.D.	BK	[illegible]		C.T.	APPROVED FOR FINAL REPORT
A	7-21-80						ISSUED FOR CLIENT APPROVAL

REVISIONS

DRAWN	C.T.	7-29-80
CHECKED	[illegible]	7-29-80
APVD SECT HD	[illegible]	7-29-80
APVD PROJ MGR	[illegible]	7-29-80
APVD MGR	C.T.	7-29-80

AMP

THE RALPH M. PARSONS COMPANY
PASADENA, CALIFORNIA

ARGONNE NATIONAL LABORATORY
ARGONNE, ILLINOIS
STARFIRE COMMERCIAL TOKAMAK REACTOR

TITLE: ARCHITECTURAL
REACTOR · TURBINE & SUPPORT · ELECTRICAL & RF POWER SUPPLY & ONSITE A/C POWER BLDG
SUB-GRADE LEVEL PLANS

SCALE: 1 : 300
ACCOUNT NUMBER: —
JOB NUMBER: 5959-1
DOCUMENT NUMBER: E-5959-AR-02
REVISION: B

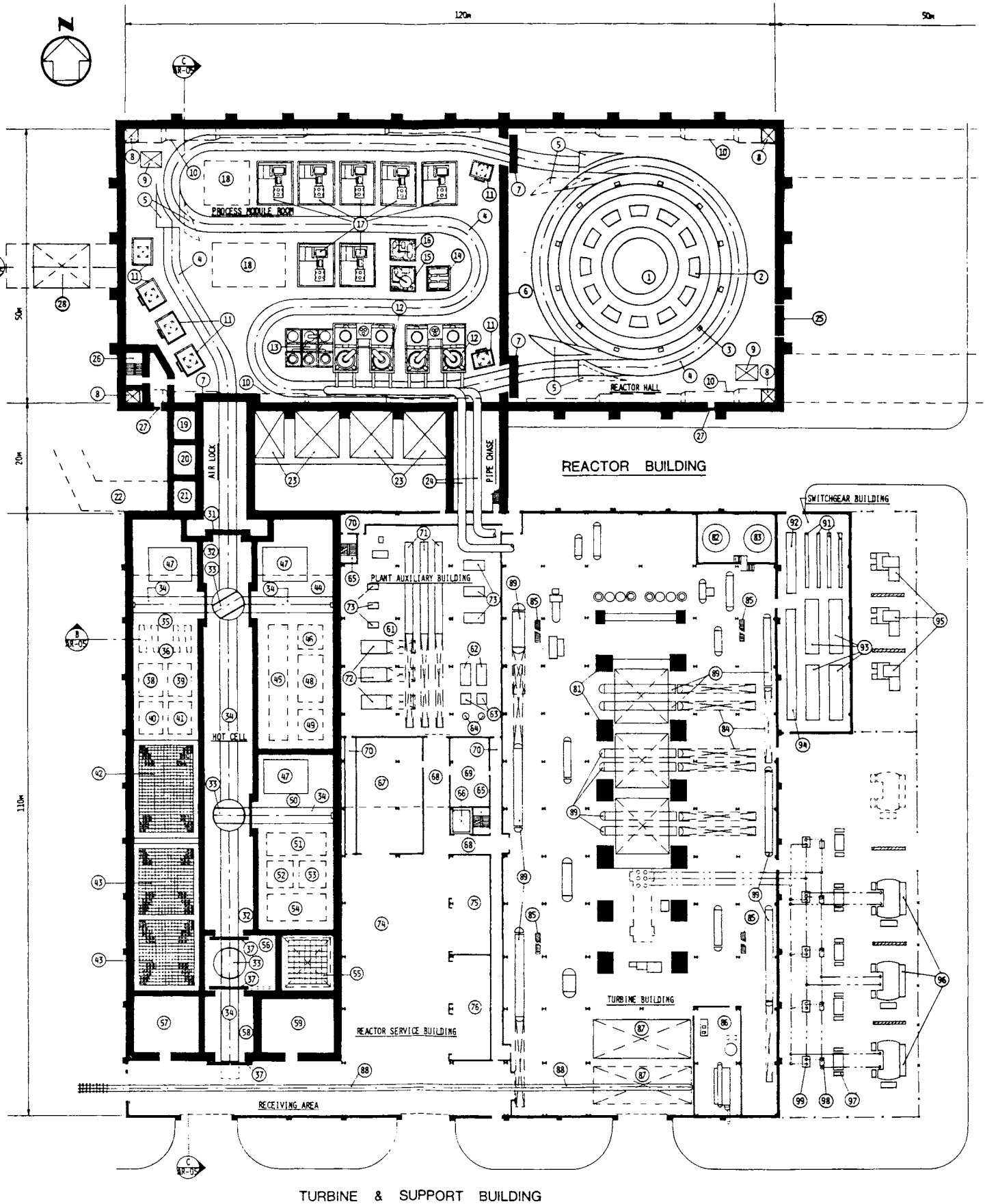

TURBINE & SUPPORT BUILDING

REFERENCES		REFERENCES		REFERENCES		REVISIONS								REVISIONS								
DRAWING NO	DESCRIPTION	DRAWING NO	DESCRIPTION	DRAWING NO	DESCRIPTION	NO	DATE	BY	CHKD	SEC	PROJ	CLIENT	DESCRIPTION	NO	DATE	BY	CHKD	SEC	PROJ	CLIENT		APPRD. ISSUED
														B								
														A								

ENG-GE-24 (11/78)

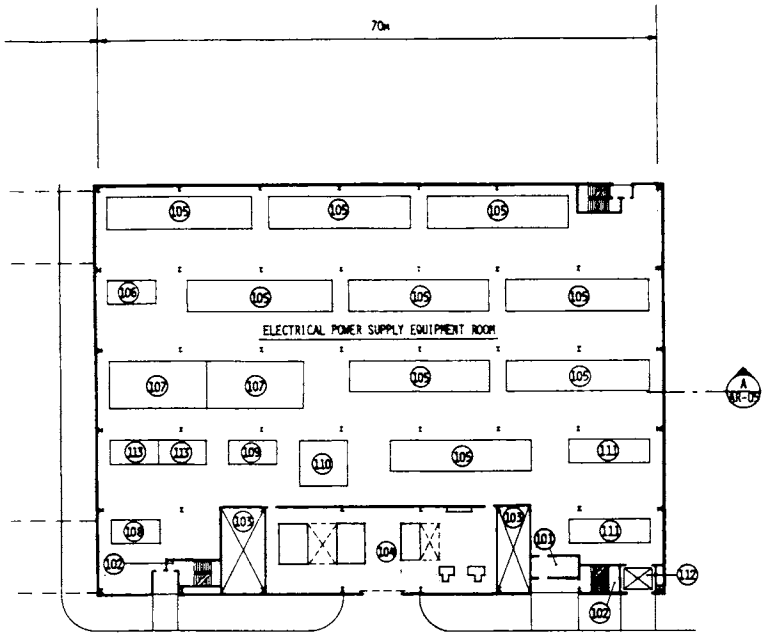

ELECTRICAL & RF POWER SUPPLY BUILDING

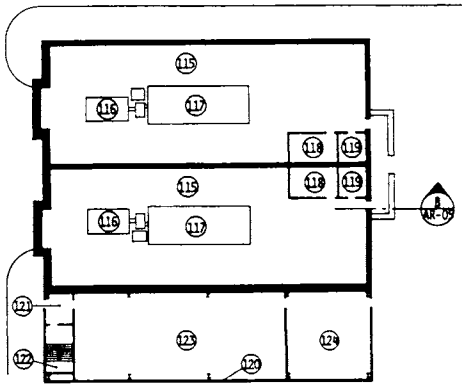

ON-SITE A/C POWER SUPPLY BUILDING

LEGEND

REACTOR BUILDING

1. TOKAMAK FUSION REACTOR SUPPORT PEDESTAL
2. TF COIL SUPPORT PEDESTALS
3. RF DUCTS
4. MONORAIL TRACK
5. MONORAIL SWITCHING SEGMENTS
6. SHIELD WALL
7. SLIDING SHIELD DOORS
8. SUPPLY AIR DUCT SHAFT
9. ACCESS HATCH TO PIPE CHASE
10. SUPPLY AIR DUCT
11. HVAC MODULE
12. STEAM GENERATORS & PRIMARY LOOP MODULE
13. LOWER COOLING LOOP MODULE
14. VACUUM PUMP/BLANKET PURGE MODULE
15. RESIDUAL HEAT REMOVAL LOOP MODULE
16. RF SYSTEM COOLING MODULE
17. ATMOSPHERIC TRITIUM PROCESSING SYSTEM
18. LAY-DOWN SPACE
19. ELEVATOR PIT (ABOVE)
20. PIPE SHAFT
21. DUCT SHAFT
22. TUNNEL TO STACK
23. AREAWAYS TO LOWER LEVEL
24. MAIN STEAM PIPE LINES
25. SEGMENTED REMOVABLE PANEL 32M HIGH
26. EMERGENCY STAIR
27. EMERGENCY EXIT
28. ACCESS HATCH TO SUB-GRADE LEVEL
29. NOT USED
30. NOT USED

HOT CELL

31. SLIDING PRESSURE RESISTANT DOORS
32. CENTER CORRIDOR
33. MONORAIL TRACK TURNTABLE
34. MONORAIL TRACK
35. BLANKET MODULE & SOLID WASTE PROCESSING
36. BLANKET MODULE HOLDING AREA
37. SLIDING SHIELD DOORS
38. INSPECTION, DISASSEMBLY & SEGREGATION AREA
39. TREATING & CUTTING AREA
40. BAKING & OUTGASSING AREA
41. CLEANING, COMPACTING, PACKAGING
42. DRY STORAGE CUBICLES
43. WET STORAGE TANKS
44. REMOTE MAINTENANCE & REPAIR SHOP
45. REMOTE MACHINE SHOP TOOLS
46. DISASSEMBLY & DIAGNOSTIC AREA
47. ATMOSPHERIC TRITIUM PROCESSING SYSTEM
48. LARGE EQUIPMENT ITEMS AREA
49. SMALL EQUIPMENT ITEMS AREA
50. LIQUID WASTE PROCESSING
51. RECEIVING & STORAGE VESSELS AREA
52. CHEMICAL TREATMENT AREA
53. PHYSICAL TREATMENT AREA
54. DRUMMING, DECONTAMINATION, TESTING & INSPECTION AREA
55. STORAGE
56. DECONTAMINATION CHAMBER
57. DECONTAMINATION EQUIPMENT & CONTROL
58. AIR LOCK
59. HOT CELL CONTROL ROOM
60. NOT USED

PLANT AUXILIARY BUILDING

61. CLOSED LOOP COOLING SYSTEM & HVAC EQUIPMENT ROOM
62. INSTRUMENT AIR COMPRESSORS
63. INSTRUMENT AIR DRYERS
64. INSTRUMENT AIR RECEIVERS
65. STAIR
66. FREIGHT ELEVATOR
67. MACHINE SHOP
68. AISLE
69. ELECTRICAL EQUIPMENT
70. CORRIDOR
71. HEAT EXCHANGERS
72. CHILLERS
73. PUMPS

REACTOR SERVICE BUILDING

74. PREPARATION & MAINTENANCE AREA
75. PARTS STORAGE
76. NEW BLANKET STORAGE
77. NOT USED
78. NOT USED
79. NOT USED
80. NOT USED

TURBINE BUILDING

81. TURBINE SUPPORT PEDESTALS
82. CLEAN LUBE OIL TANK
83. DIRTY LUBE OIL TANK
84. TUBE PULLING SPACE
85. STAIRS
86. AUXILIARY BOILER ROOM
87. EQUIPMENT ACCESS HATCH
88. RAILROAD SPUR
89. FEEDWATER HEATERS
90. NOT USED

SWITCHGEAR BUILDING, MAIN & AUXILIARY TRANSFORMER YARDS

91. MOTOR CONTROL CENTERS
92. 480 V LOAD CENTER
93. 13.8 KV SWITCHGEAR
94. 4.16 KV SWITCHGEAR
95. RESERVE STATION SERVICE TRANSFORMERS
96. MAIN STEP-UP TRANSFORMERS
97. UNIT AUXILIARY TRANSFORMERS
98. 26 KV OUTDOOR BREAKER
99. REACTOR & DISCONNECT SWITCH
100. NOT USED

ELECTRICAL & RF POWER SUPPLY BUILDING

101. VESTIBULE
102. STAIR
103. DUCT SHAFT
104. HVAC EQUIPMENT ROOM
105. MAIN EF COIL POWER SUPPLY
106. OH COIL POWER SUPPLY
107. CONVERTER-INVERTER #2 & #4
108. TOROIDAL FIELD COILS POWER SUPPLY
109. EF TRIM COILS POWER SUPPLY
110. ENERGY STORAGE DEVICE EF TRIM COILS
111. 13.8 KV SWITCHGEAR
112. FREIGHT ELEVATOR
113. CONVERTER-INVERTER #1 & #3
114. NOT USED

ONSITE A/C POWER SUPPLY

115. TURBINE-GENERATOR ROOM
116. GENERATOR
117. GAS TURBINE
118. CONTROL ROOM
119. BATTERY ROOM
120. SWITCHYARD CONTROL
121. VESTIBULE
122. STAIR
123. CABLE SPREADING ROOM
124. HVAC EQUIPMENT ROOM

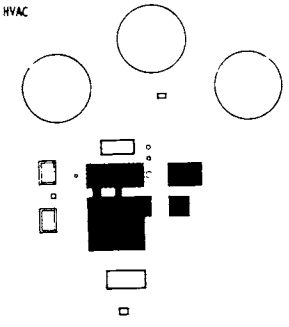

KEY PLAN

	DRAWN	C.T. Bibb	7-24-86
	CHECKED	[illegible]	7-29-86
IED FOR FINAL REPORT	APVD SECT HD	[illegible]	7-24-86
FOR CLIENT APPROVAL	APVD PROJ MGR	[illegible]	7-29-86
DESCRIPTION	APVD MGR	[illegible]	7-29-86

RMP
THE RALPH M. PARSONS COMPANY
PASADENA, CALIFORNIA

ARGONNE NATIONAL LABORATORY
ARGONNE, ILLINOIS
STARFIRE COMMERCIAL TOKAMAK REACTOR

TITLE	SCALE	ACCOUNT NUMBER	JOB NUMBER	REVISION
ARCHITECTURAL REACTOR, TURBINE & SUPPORT, ELECTRICAL & RF POWER SUPPLY & ONSITE A/C POWER BLDG GROUND LEVEL PLANS	1 : 100	—	5959-1	
	DOCUMENT NUMBER	E-5959-AR-03		

Figure 20-8

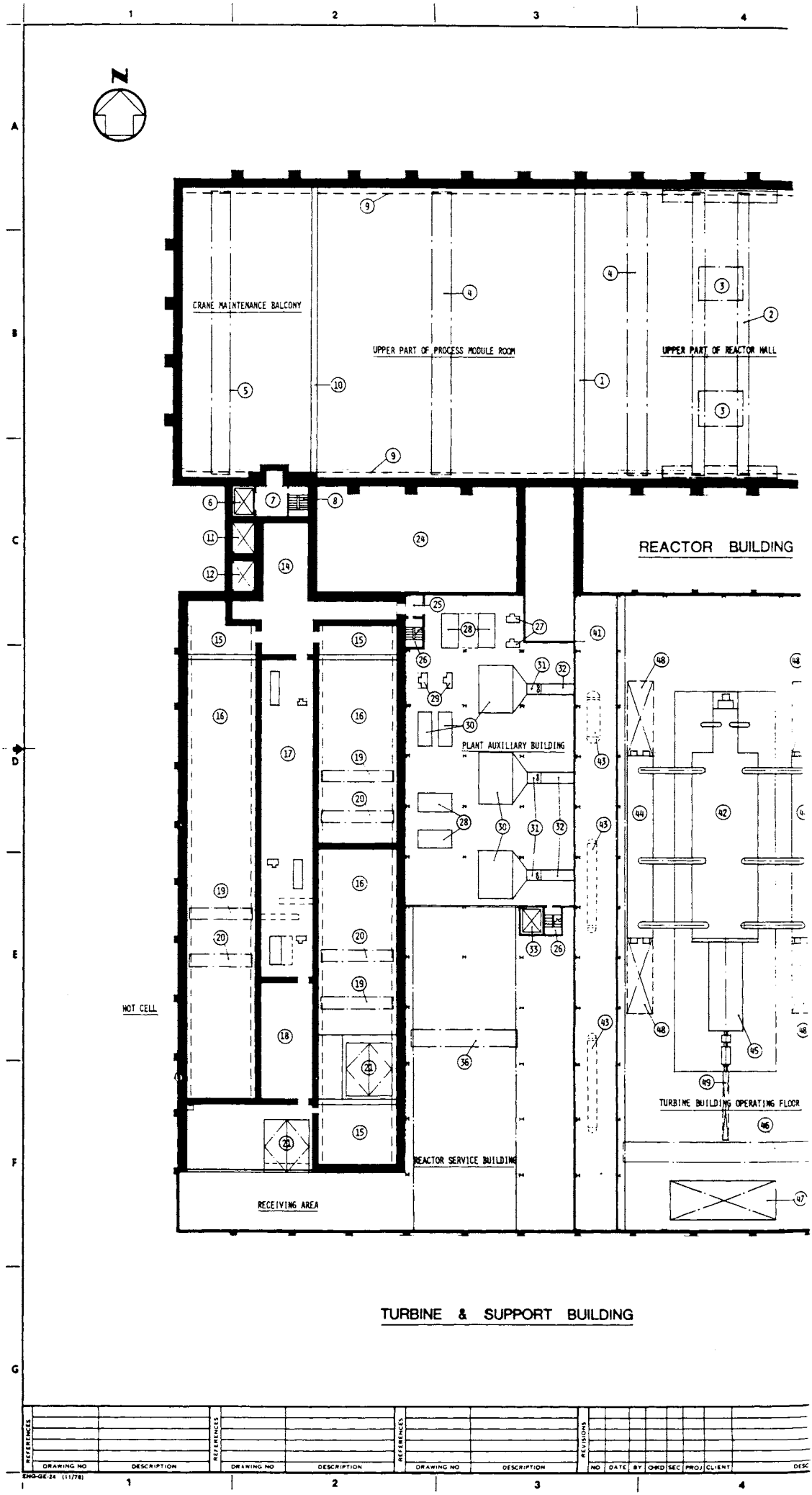
CRANE MAINTENANCE BALCONY
UPPER PART OF PROCESS MODULE ROOM
UPPER PART OF REACTOR HALL
REACTOR BUILDING
PLANT AUXILIARY BUILDING
HOT CELL
TURBINE BUILDING OPERATING FLOOR
REACTOR SERVICE BUILDING
RECEIVING AREA
TURBINE & SUPPORT BUILDING

Figure 20-9

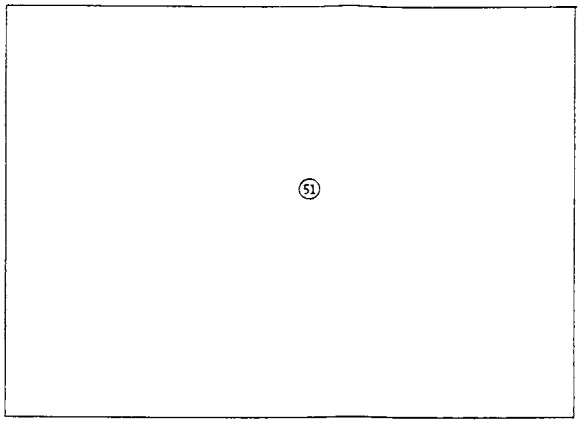

ELECTRICAL & RF POWER SUPPLY BUILDING

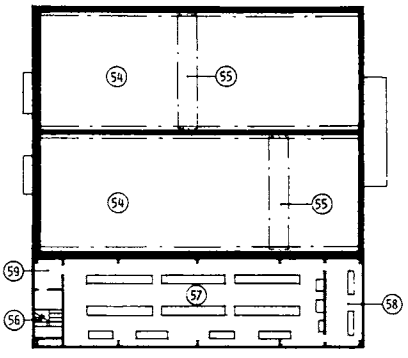

ON SITE A/C POWER SUPPLY BUILDING

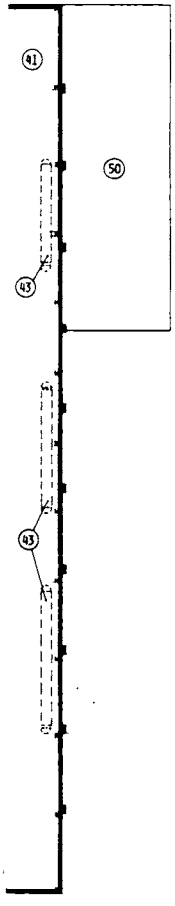

LEGEND

REACTOR BUILDING

1. SHIELD WALL
2. 600 TON BRIDGE CRANE
3. 300 TON TROLLEY
4. ELECTRO-MECHANICAL BRIDGE MANIPULATOR
5. 60 TON BRIDGE CRANE (SHOWN UNDER CRANE MAINTENANCE BALCONY)
6. FREIGHT ELEVATOR
7. ELEVATOR LOBBY
8. STAIR
9. CRANE RUNWAY CORBEL
10. BALCONY RAIL
11. PIPE SHAFT
12. DUCT SHAFT
13. NOT USED

HOT CELL

14. CORRIDOR
15. CRANE MAINTENANCE
16. UPPER PART OF CELL
17. HVAC EQUIPMENT ROOM
18. ELECTRICAL EQUIPMENT ROOM
19. 60 TON BRIDGE CRANE
20. ELECTRO-MECHANICAL BRIDGE MANIPULATOR
21. REMOVABLE HATCH
22. NOT USED
23. NOT USED

PLANT AUXILIARY BUILDING

24. AREAWAY AIR WELL
25. VESTIBULE
26. STAIR
27. EXHAUST FAN
28. AIR HANDLING UNIT
29. PRESSURE CONTROL FANS
30. PLENUM
31. SUPPLY AIR FAN
32. HVAC DUCT TO TURBINE BUILDING
33. FREIGHT ELEVATOR
34. NOT USED
35. NOT USED

REACTOR SERVICE

36. 60 TON BRIDGE CRANE
37. NOT USED
38. NOT USED
39. NOT USED
40. NOT USED

TURBINE BUILDING

41. HVAC GALLERY
42. TURBINE CASING
43. FEEDWATER HEATERS
44. MOISTURE SEPARATOR/REHEATERS
45. GENERATOR
46. 250 TON BRIDGE CRANE
47. EQUIPMENT ACCESS HATCH
48. TUBE PULLING SPACE
49. ROTOR PULLING SPACE
50. SWITCHGEAR BUILDING ROOF

ELECTRICAL & RF POWER SUPPLY BUILDING

51. ROOF
52. NOT USED
53. NOT USED

ON SITE A/C POWER SUPPLY BUILDING

54. UPPER PART OF TURBINE GENERATOR ROOM
55. 10 TON BRIDGE CRANE
56. STAIR
57. SWITCHYARD CONTROL EQUIPMENT ROOM
58. BATTERY ROOM
59. VESTIBULE

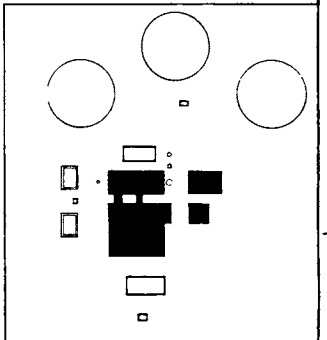

KEY PLAN

1:300

REVISIONS								
B	8-29-80	J.L.	JK			C.T		APPROVED FOR FINAL REPORT
A	7-29-80							ISSUED FOR CLIENT APPROVAL
NO.	DATE	BY	CHKD	SEC	PROJ	CLIENT		DESCRIPTION

FOR		
DRAWN	J. Lakowski	7-24-80
CHECKED	[illegible]	7-27-80
APVD SECT HD	[illegible]	8-29-80
APVD PROJ MGR	[illegible]	8-29-80
APVD MGAC	[illegible]	8-29-80

AMP

THE RALPH M. PARSONS COMPANY
PASADENA, CALIFORNIA

ARGONNE NATIONAL LABORATORY
ARGONNE, ILLINOIS
STARFIRE COMMERCIAL TOKAMAK REACTOR

TITLE: ARCHITECTURAL
REACTOR, TURBINE & SUPPORT, ELECTRICAL & RF POWER SUPPLY & ONSITE A/C POWER BLDG UPPER LEVEL PLANS

SCALE: 1 : 300
DRAWING NUMBER: —
JOB NUMBER: 5959-1
REVISION: B
DOCUMENT NUMBER: E-5959-AR-04

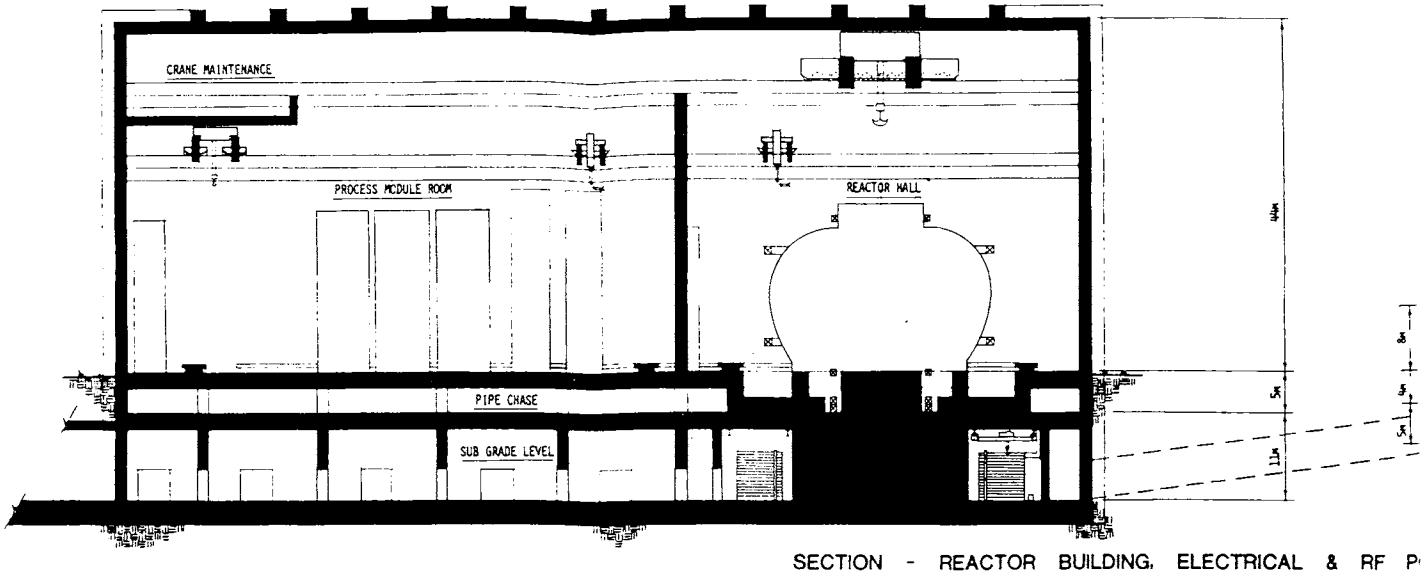

SECTION - REACTOR BUILDING, ELECTRICAL & RF P

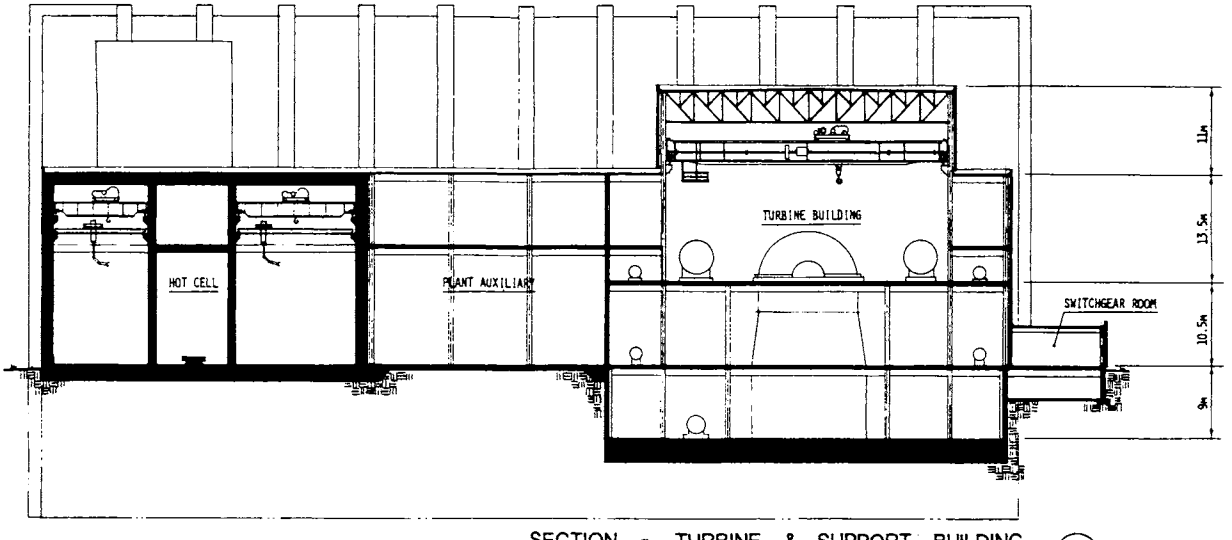

SECTION - TURBINE & SUPPORT BUILDING (B / AR-05)

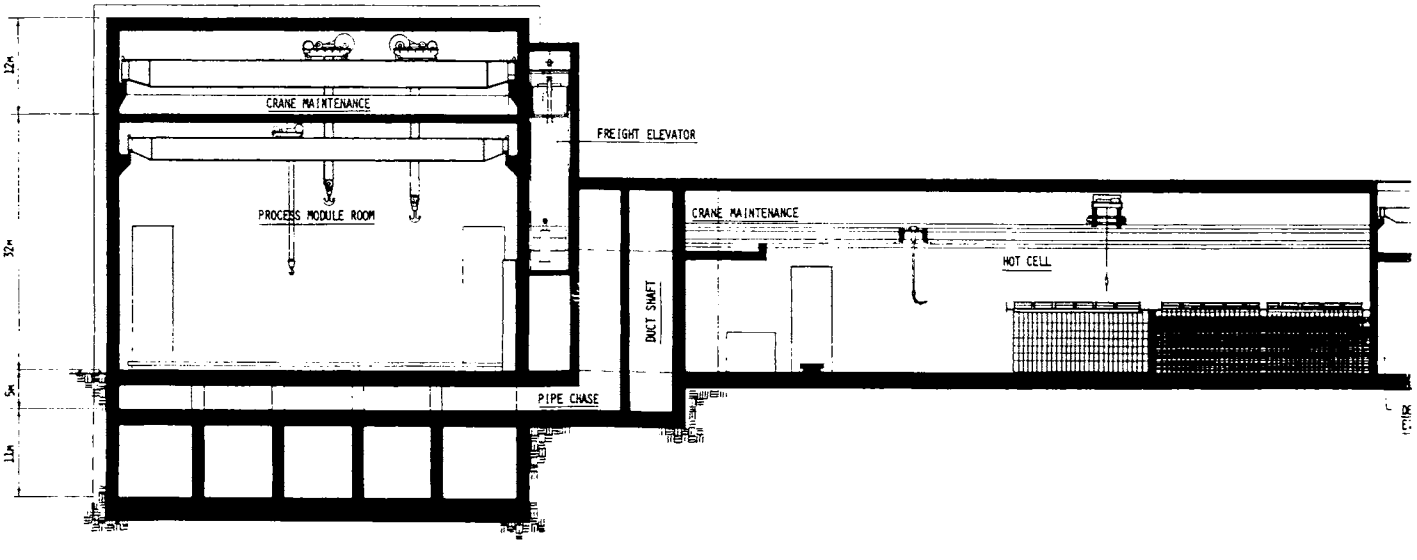

SECTION - REACTOR BUILDING, HOT CELL (C / AR-05)

REFERENCES		REFERENCES		REFERENCES		REVISIONS								REVISIONS								
DRAWING NO	DESCRIPTION	DRAWING NO	DESCRIPTION	DRAWING NO	DESCRIPTION	NO	DATE	BY	CHKD	SEC	PROJ	CLIENT	DESCRIPTION	NO	DATE	BY	CHKD	SEC	PROJ	CLIENT		
														B	9-29-80	J.L.	BK		C T		APPRO	
														A	7-29-80						IPA-E.	

ENG-GE-24 (11/78)

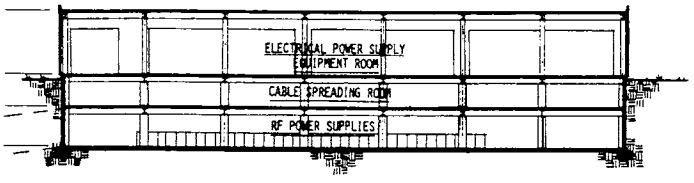

)WER SUPPLY BUILDING (A / AR-05)

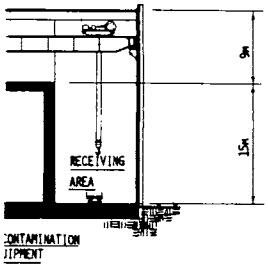

1:300

	FOR		
	DRAWN		7-29-80
	CHECKED		7-29-80
ED FOR FINAL REPORT	APVD SECT HD		8-29-80
FOR CLIENT APPROVAL	APVD PROJ MGR		8-29-80
DESCRIPTION	APVD MGMT		8-29-80

THE RALPH M. PARSONS COMPANY
PASADENA, CALIFORNIA

ARGONNE NATIONAL LABORATORY
ARGONNE, ILLINOIS
STARFIRE COMMERCIAL TOKAMAK REACTOR

TITLE	SCALE	ACCOUNT NUMBER	JOB NUMBER	REVISION
ARCHITECTURAL REACTOR, TURBINE & SUPPORT, ELECTRICAL & RF POWER SUPPLY & ONSITE A/C POWER BLDG BUILDING SECTIONS	1 : 300	—	5959-1	
	DOCUMENT NUMBER	E-5959-AR-05		

Figure 20-10

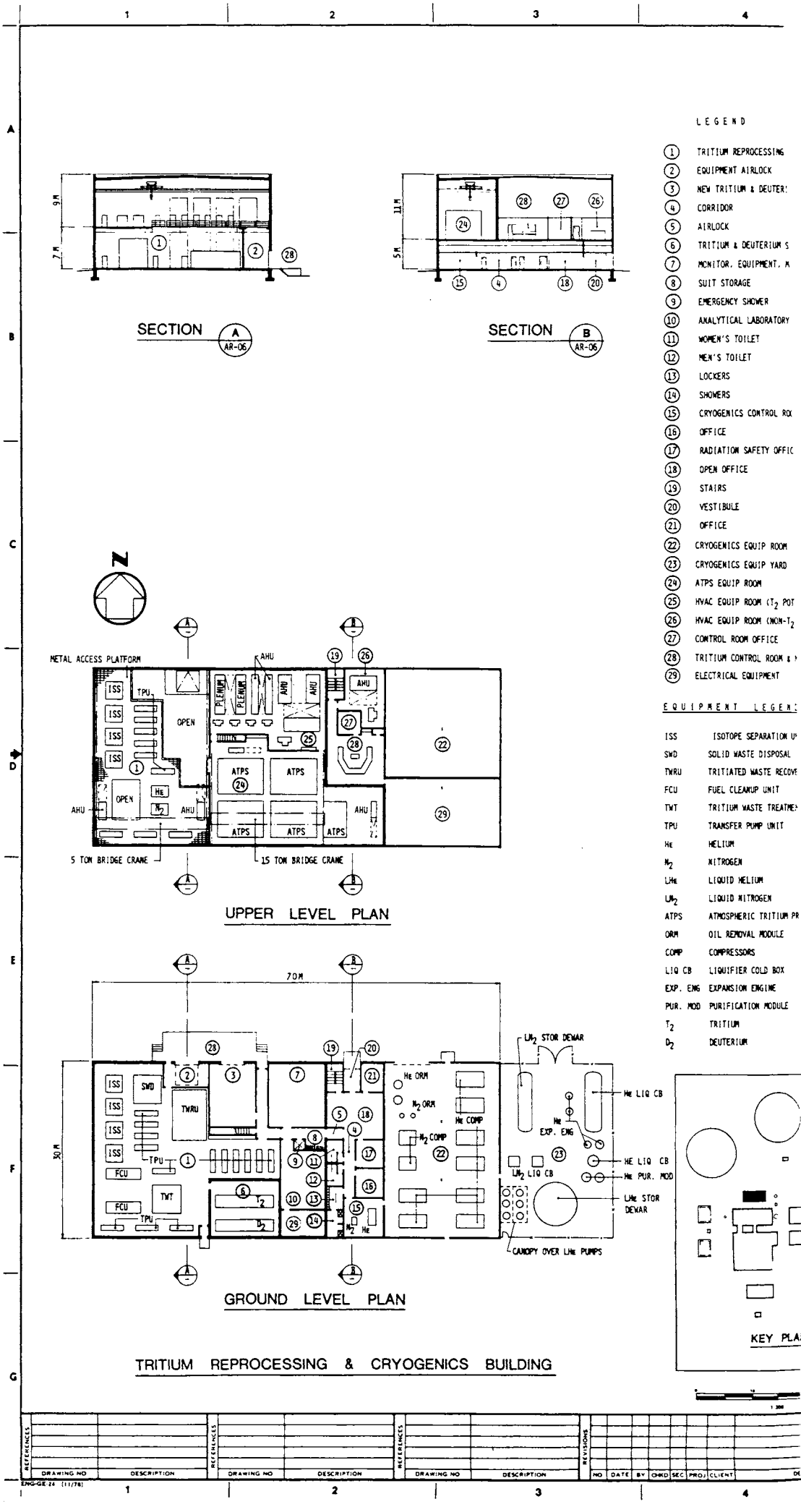
SECTION A AR-06
SECTION B AR-06
LEGEND
1 TRITIUM REPROCESSING
2 EQUIPMENT AIRLOCK
3 NEW TRITIUM & DEUTER
4 CORRIDOR
5 AIRLOCK
6 TRITIUM & DEUTERIUM S
7 MONITOR, EQUIPMENT, M
8 SUIT STORAGE
9 EMERGENCY SHOWER
10 ANALYTICAL LABORATORY
11 WOMEN'S TOILET
12 MEN'S TOILET
13 LOCKERS
14 SHOWERS
15 CRYOGENICS CONTROL RO
16 OFFICE
17 RADIATION SAFETY OFFIC
18 OPEN OFFICE
19 STAIRS
20 VESTIBULE
21 OFFICE
22 CRYOGENICS EQUIP ROOM
23 CRYOGENICS EQUIP YARD
24 ATPS EQUIP ROOM
25 HVAC EQUIP ROOM (T2 POT
26 HVAC EQUIP ROOM (NON-T2
27 CONTROL ROOM OFFICE
28 TRITIUM CONTROL ROOM &
29 ELECTRICAL EQUIPMENT
EQUIPMENT LEGEN
ISS ISOTOPE SEPARATION U
SWD SOLID WASTE DISPOSAL
TWRU TRITIATED WASTE RECOVE
FCU FUEL CLEANUP UNIT
TWT TRITIUM WASTE TREATME
TPU TRANSFER PUMP UNIT
He HELIUM
N2 NITROGEN
LHe LIQUID HELIUM
LN2 LIQUID NITROGEN
ATPS ATMOSPHERIC TRITIUM PR
ORM OIL REMOVAL MODULE
COMP COMPRESSORS
LIQ CB LIQUIFIER COLD BOX
EXP. ENG EXPANSION ENGINE
PUR. MOD PURIFICATION MODULE
T2 TRITIUM
D2 DEUTERIUM
N
METAL ACCESS PLATFORM
AHU
PLENUM
OPEN
ATPS
5 TON BRIDGE CRANE
15 TON BRIDGE CRANE
UPPER LEVEL PLAN
70M
30M
LN2 STOR DEWAR
He ORM
N2 ORM
He COMP
N2 COMP
He LIQ CB
He EXP. ENG
LN2 LIQ CB
He PUR. MOD
LHe STOR DEWAR
CANOPY OVER LHe PUMPS
GROUND LEVEL PLAN
KEY PLA
TRITIUM REPROCESSING & CRYOGENICS BUILDING
REFERENCES
DRAWING NO
DESCRIPTION
REVISIONS
NO DATE BY CHKD SEC PROJ CLIENT
ENG-GE-24 (11/78)

Figure 20-11

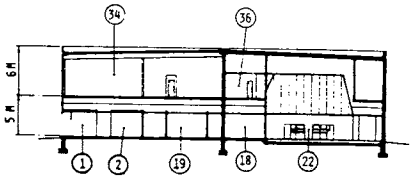

SECTION C AR-06

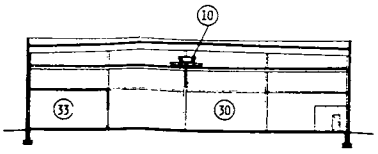

SECTION D AR-06

LEGEND

1. VESTIBULE
2. LOBBY
3. CONFERENCE
4. STORAGE
5. WOMEN'S TOILET
6. MEN'S TOILET
7. LUNCH ROOM
8. CORRIDOR
9. PLANT SUPERINTENDENT
10. PLANT ENGINEER
11. TECHNICAL SUPERVISOR
12. INSTRUMENTATION ENGINEER
13. NUCLEAR ENGINEER
14. SECRETARY
15. ASSISTANT PLANT SUPT
16. OPERATIONS SUPERVISOR
17. MAINTENANCE SUPERVISOR
18. SHIFT SUPERVISOR
19. HEALTH PHYSICIST
20. FILES
21. CONTROL OFFICE
22. MAIN CONTROL ROOM
23. ELECTRICAL EQUIP
24. COMPUTER STORAGE
25. COMPUTER
26. INSTRUMENT MAINT. & REPAIR
27. TOOLS, PARTS
28. MAINTENANCE RECEIVING OFFICE
29. WAREHOUSE RECEIVING OFFICE
30. MAINTENANCE SHOP
31. WAREHOUSE
32. TOOLS
33. WELDING
34. HVAC EQUIP
35. UPPER PART OF CONTROL ROOM
36. OBSERVATION GALLERY
37. UPPER PART OF MAINT. SHOP
38. UPPER PART OF WAREHOUSE
39. 10 TON BRIDGE CRANE

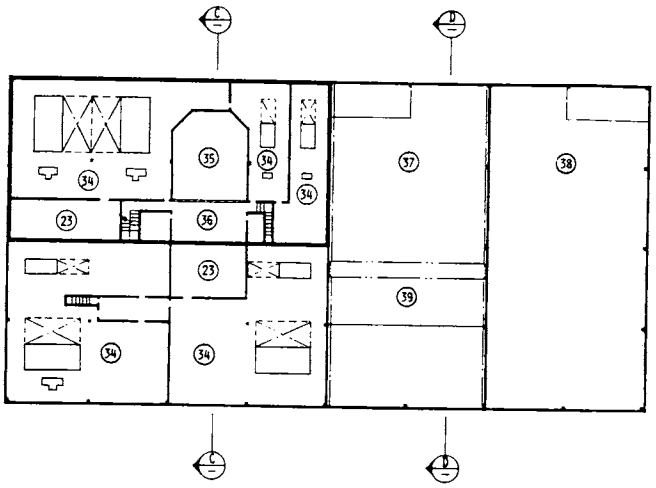

UPPER LEVEL PLAN

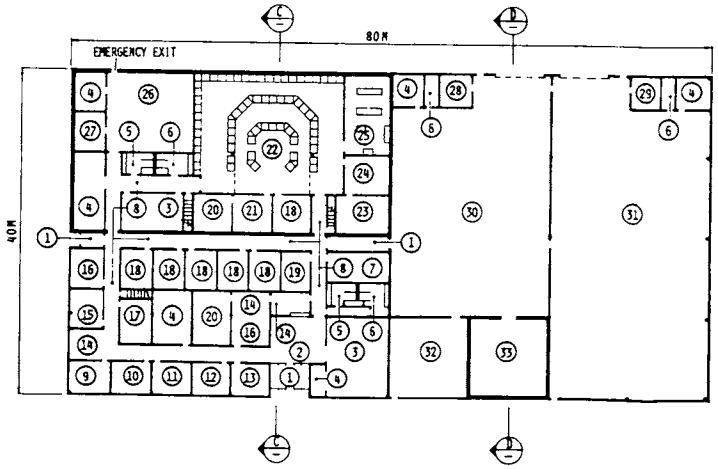

GROUND LEVEL PLAN

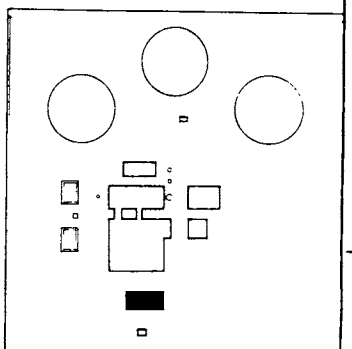

KEY PLAN

ADMINISTRATION, CONTROL & SITE SERVICE BUILDING

REVISIONS								
B	6-29-80	CTD	DK			C T	APPROVED FOR FINAL REPORT	
A	7-19-80						ISSUED FOR CLIENT APPROVAL	
NO.	DATE	BY	CHKD	SEC	PROJ	CLIENT	DESCRIPTION	

DRAWN	J. Lamuda	7-29-80
CHECKED	R. Kenney	7-29-80
APVD SECT HD	R. Kenney	7-29-80
APVD PROJ MGR	R. Kenney	7-29-80
APVD HDQTR	C. Fendall	7-29-80

AMP

THE RALPH M. PARSONS COMPANY
PASADENA, CALIFORNIA

ARGONNE NATIONAL LABORATORY
ARGONNE, ILLINOIS
STARFIRE COMMERCIAL TOKAMAK REACTOR

TITLE: ARCHITECTURAL
TRITIUM, REPROCESSING & CRYOGENICS, ADMINISTRATION, CONTROL & SITE SERVICE
GROUND & UPPER LEVEL PLANS, SECTIONS

SCALE: 1 : 300
SUBSIDIARY NUMBER: —
JOB NUMBER: 5959-1
DOCUMENT NUMBER: E-5959-AR-06
REV NUMBER: 2

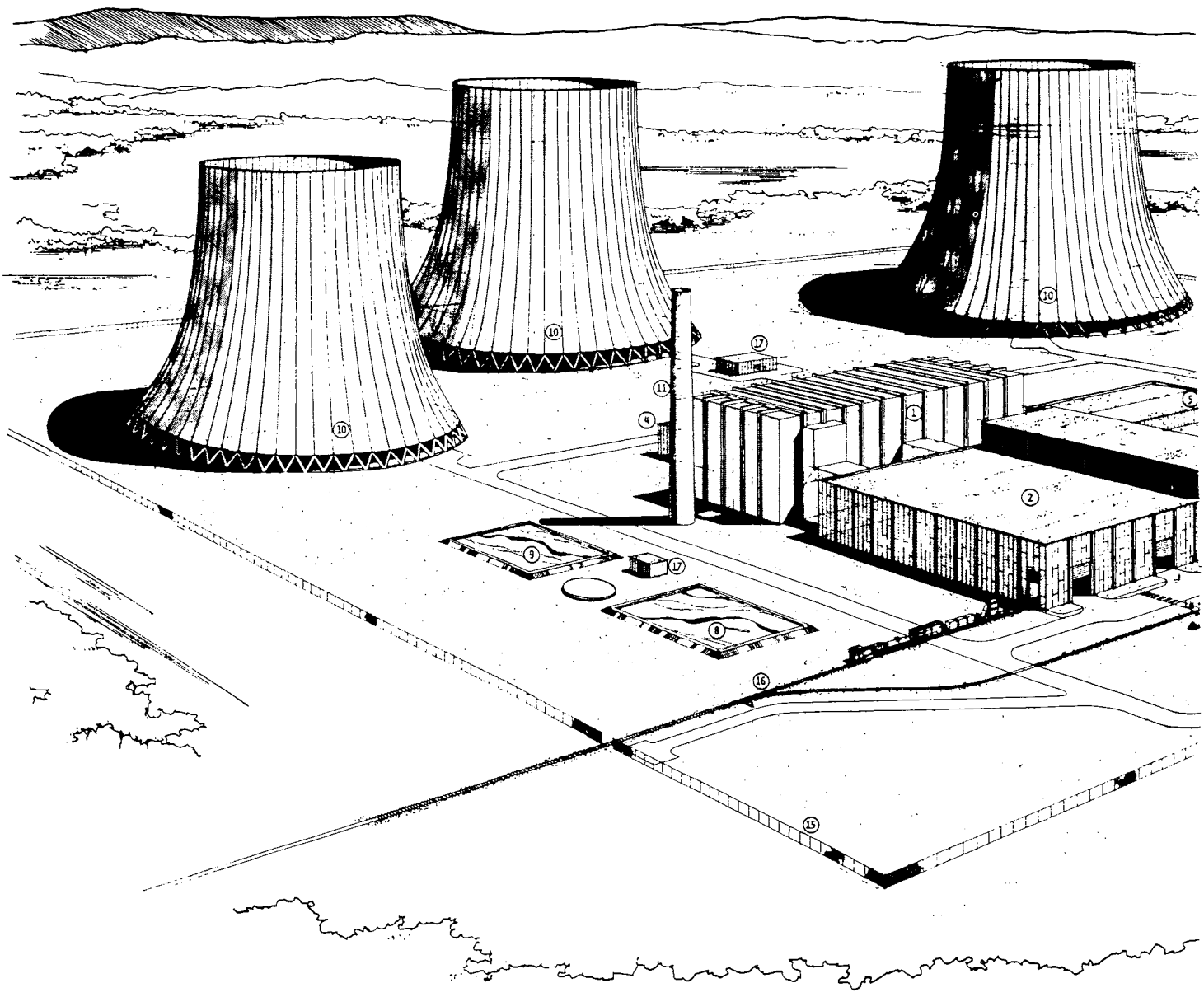

REFERENCES		REFERENCES		REFERENCES		REVISIONS								REVISIONS										
DRAWING NO	DESCRIPTION	DRAWING NO	DESCRIPTION	DRAWING NO	DESCRIPTION	NO	DATE	BY	CHKD	SEC	PROJ	CLIENT	DESCRIPTION	NO	DATE	BY	CHKD	SEC	PROJ	CLIENT				
														B	6-29-88	AK	GED	RC/RATTO	C.T.	APPRO				
														A	7-29-88	AK				ISSUED				

ENG-GE-24 (11,78)

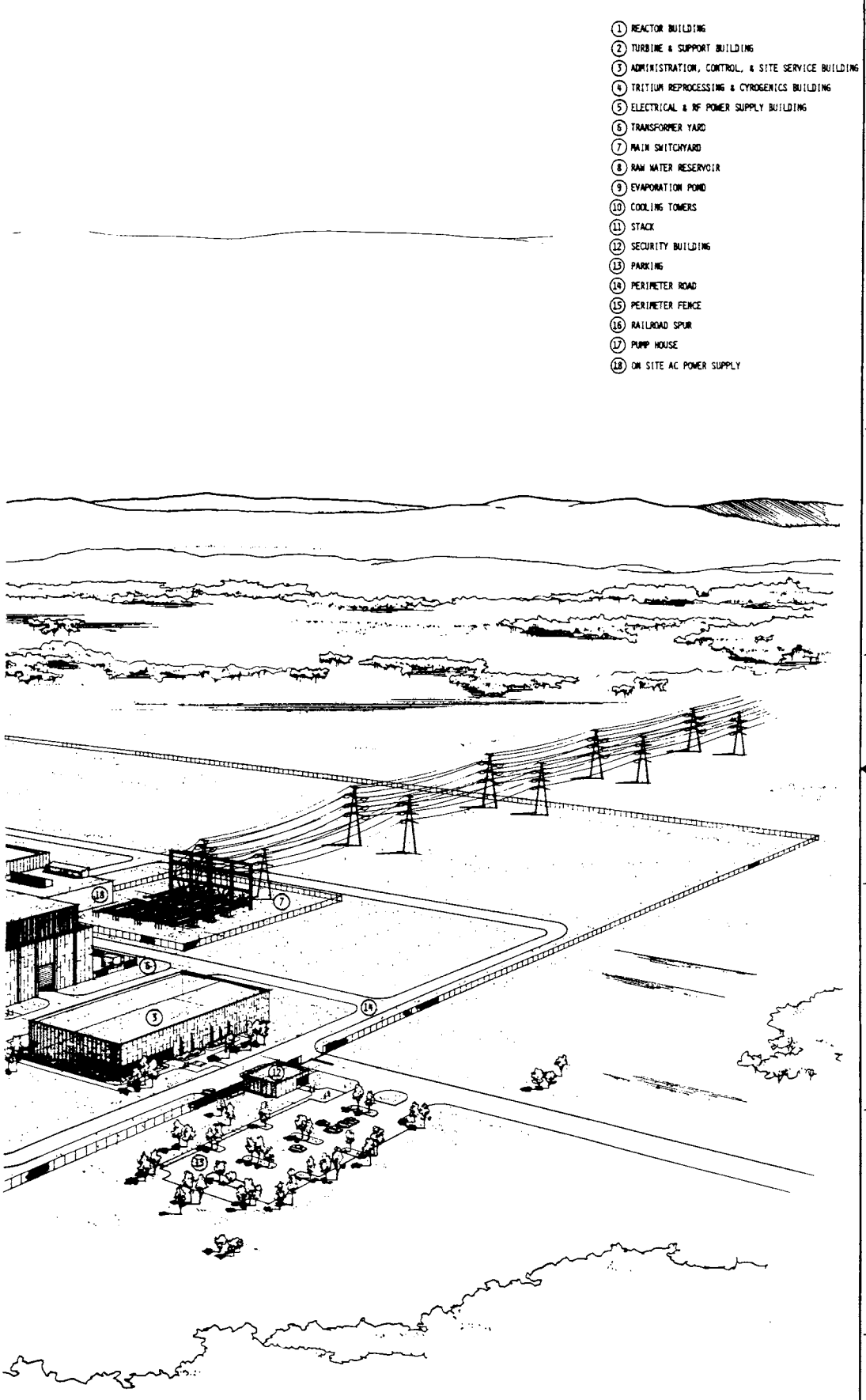

ARGONNE NATIONAL LABORATORY
ARGONNE, ILLINOIS
STARFIRE COMMERCIAL TOKAMAK REACTOR

THE RALPH M. PARSONS COMPANY
PASADENA, CALIFORNIA

ARCHITECTURAL
FUSION POWER PLANT
SITE PERSPECTIVE

E-5959-AR-07

Figure 20-12

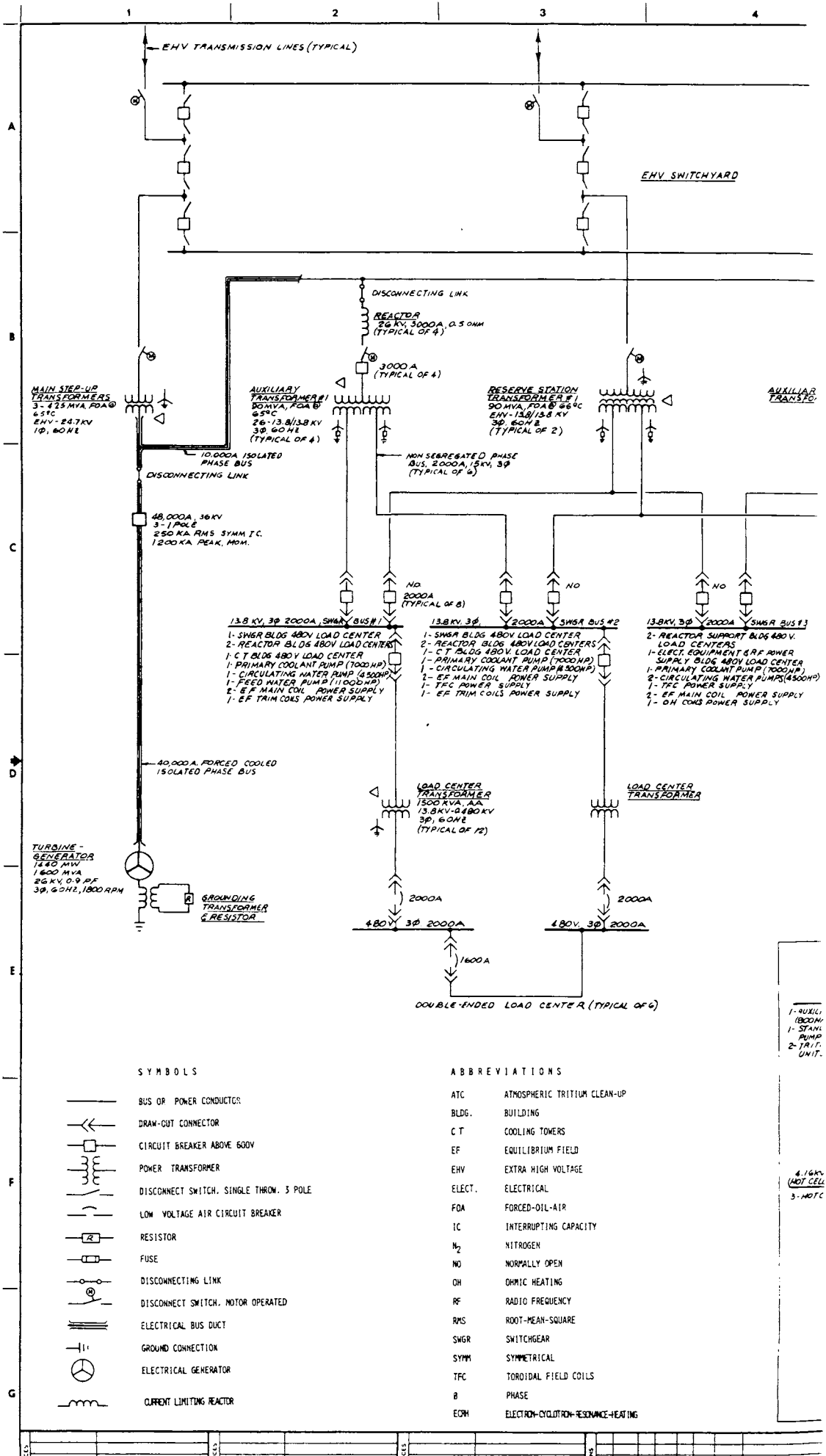
EHV TRANSMISSION LINES (TYPICAL)
EHV SWITCHYARD
DISCONNECTING LINK
REACTOR
2.6 KV, 3000A, 0.5 OHM
(TYPICAL OF 4)
3000 A
(TYPICAL OF 4)
MAIN STEP-UP TRANSFORMERS
3-425 MVA, FOA @ 65°C
EHV-24.7 KV
1Φ, 60 HZ
AUXILIARY TRANSFORMER #1
90 MVA, FOA @ 65°C
26-13.8/13.8 KV
3Φ, 60 HZ
(TYPICAL OF 4)
RESERVE STATION TRANSFORMER #1
90 MVA, FOA @ 65°C
EHV-13.8/13.8 KV
3Φ, 60 HZ
(TYPICAL OF 2)
10,000A ISOLATED PHASE BUS
DISCONNECTING LINK
NON SEGREGATED PHASE BUS, 2000A, 15KV, 3Φ
(TYPICAL OF 6)
48,000A, 36KV
3-1 POLE
250 KA RMS SYMM. I.C.
1200 KA PEAK, MOM.
NO
2000A
(TYPICAL OF 8)
13.8 KV, 3Φ 2000A SWGR BUS #1
1- SWGR BLDG 480V LOAD CENTER
2- REACTOR BLDG 480V LOAD CENTERS
1- C T BLDG 480V LOAD CENTER
1- PRIMARY COOLANT PUMP (7000 HP)
1- CIRCULATING WATER PUMP (4500HP)
1- FEED WATER PUMP (1100 HP)
2- EF MAIN COIL POWER SUPPLY
1- EF TRIM COILS POWER SUPPLY
13.8 KV, 3Φ 2000A SWGR BUS #2
1- SWGR BLDG 480V LOAD CENTER
2- REACTOR BLDG 480V LOAD CENTERS
1- C T BLDG 480V LOAD CENTER
1- PRIMARY COOLANT PUMP (7000 HP)
1- CIRCULATING WATER PUMP (4500HP)
2- EF MAIN COIL POWER SUPPLY
1- TFC POWER SUPPLY
1- EF TRIM COILS POWER SUPPLY
13.8KV, 3Φ 2000A SWGR BUS #3
2- REACTOR SUPPORT BLDG 480 V. LOAD CENTERS
1- ELECT. EQUIPMENT & RF POWER SUPPLY BLDG 480V LOAD CENTER
1- PRIMARY COOLANT PUMP (7000 HP)
2- CIRCULATING WATER PUMPS (4500HP)
1- TFC POWER SUPPLY
2- EF MAIN COIL POWER SUPPLY
1- OH COILS POWER SUPPLY
40,000 A, FORCED COOLED ISOLATED PHASE BUS
LOAD CENTER TRANSFORMER
1500 KVA, AA
13.8KV-0.480 KV
3Φ, 60 HZ
(TYPICAL OF 12)
LOAD CENTER TRANSFORMER
TURBINE-GENERATOR
1440 MW
1600 MVA
26 KV, 0.9 PF
3Φ, 60 HZ, 1800 RPM
GROUNDING TRANSFORMER & RESISTOR
2000A
480V 3Φ 2000A
1600 A
DOUBLE-ENDED LOAD CENTER (TYPICAL OF 6)
SYMBOLS
BUS OR POWER CONDUCTOR
DRAW-OUT CONNECTOR
CIRCUIT BREAKER ABOVE 600V
POWER TRANSFORMER
DISCONNECT SWITCH, SINGLE THROW, 3 POLE
LOW VOLTAGE AIR CIRCUIT BREAKER
RESISTOR
FUSE
DISCONNECTING LINK
DISCONNECT SWITCH, MOTOR OPERATED
ELECTRICAL BUS DUCT
GROUND CONNECTION
ELECTRICAL GENERATOR
CURRENT LIMITING REACTOR
ABBREVIATIONS
ATC ATMOSPHERIC TRITIUM CLEAN-UP
BLDG. BUILDING
C T COOLING TOWERS
EF EQUILIBRIUM FIELD
EHV EXTRA HIGH VOLTAGE
ELECT. ELECTRICAL
FOA FORCED-OIL-AIR
IC INTERRUPTING CAPACITY
N2 NITROGEN
NO NORMALLY OPEN
OH OHMIC HEATING
RF RADIO FREQUENCY
RMS ROOT-MEAN-SQUARE
SWGR SWITCHGEAR
SYMM SYMMETRICAL
TFC TOROIDAL FIELD COILS
Φ PHASE
ECRH ELECTRON-CYCLOTRON-RESONANCE-HEATING
REFERENCES
DRAWING NO
DESCRIPTION
REVISIONS
NO
DATE
BY
CHKD
SEC
PROJ
CLIENT
ENG-GE-24 (11/78)

Figure 20-13

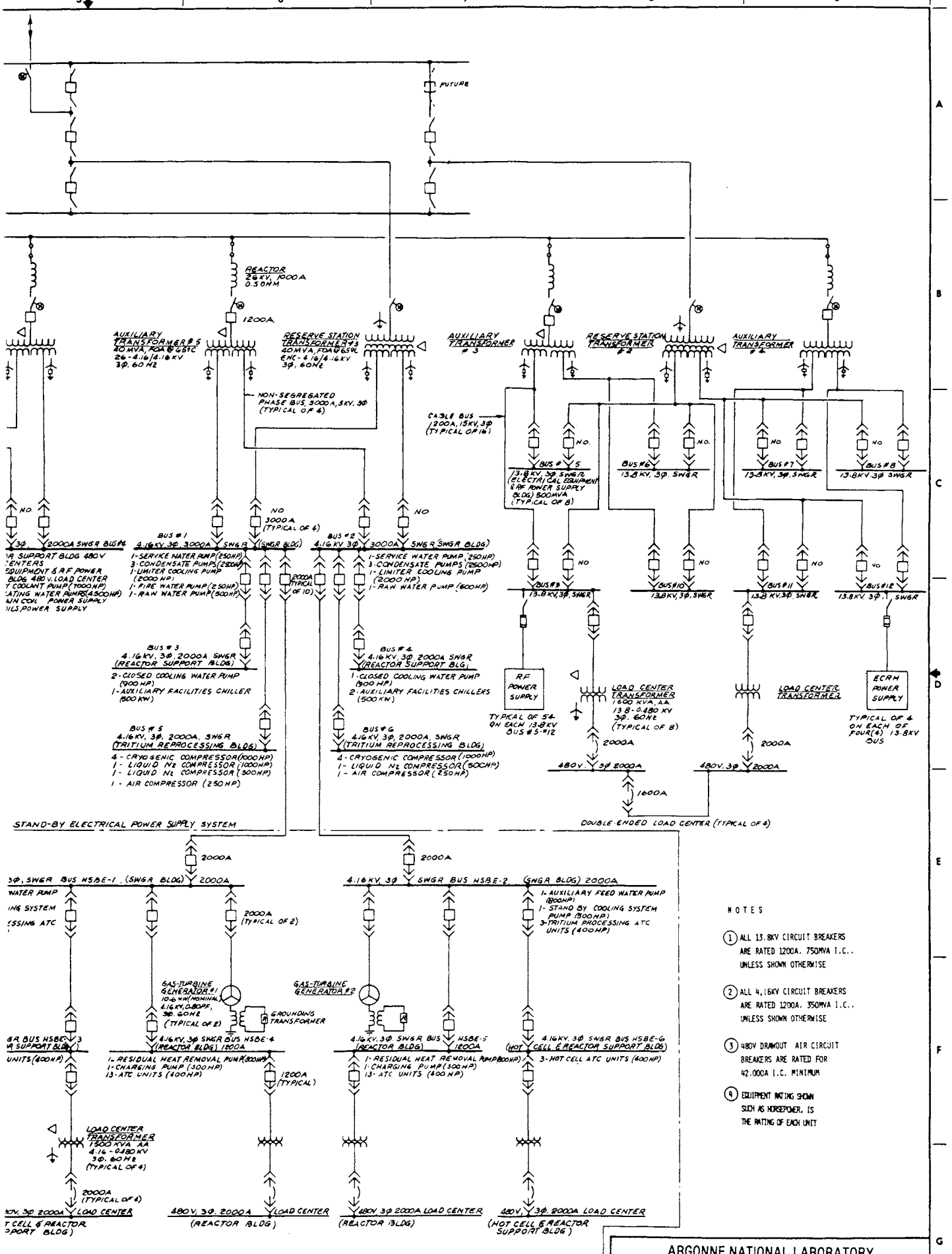

NOTES

1. ALL 13.8KV CIRCUIT BREAKERS ARE RATED 1200A. 750MVA I.C., UNLESS SHOWN OTHERWISE
2. ALL 4.16KV CIRCUIT BREAKERS ARE RATED 1200A. 350MVA I.C., UNLESS SHOWN OTHERWISE
3. 480V DRAWOUT AIR CIRCUIT BREAKERS ARE RATED FOR 42,000A I.C. MINIMUM
4. EQUIPMENT RATING SHOWN SUCH AS HORSEPOWER, IS THE RATING OF EACH UNIT

REVISIONS								
B	8-29-80	TD	GSM	GE	WMB	CT	APPROVED FOR FINAL REPORT
A	7-29-80	TD	GSM	GE	WMB		ISSUED FOR CLIENT APPROVAL
NO	DATE	BY	CHKD	SEC	PROJ	CLIENT	DESCRIPTION

DR. FOR	T. DATTE	7-29-80
CHECKED	G. ARVAY	7-29-80
APVD SECT. HD	G. ARVAY	7-29-80
APVD PROJ. MGR	W. MCBurney	8-29-80
APVD C	C. Trunbull	8-29-80

AMP
THE RALPH M. PARSONS COMPANY
PASADENA, CALIFORNIA

ARGONNE NATIONAL LABORATORY
ARGONNE, ILLINOIS
STARFIRE COMMERCIAL TOKAMAK REACTOR

TITLE: ELECTRICAL
UNIT GENERATOR & AUXILIARY POWER SYSTEM
ONE LINE DIAGRAM

SCALE: —
ACCOUNT NUMBER: —
JOB NUMBER: 5959-1
DOCUMENT NUMBER: E-5959-EE-01
REVISION: B

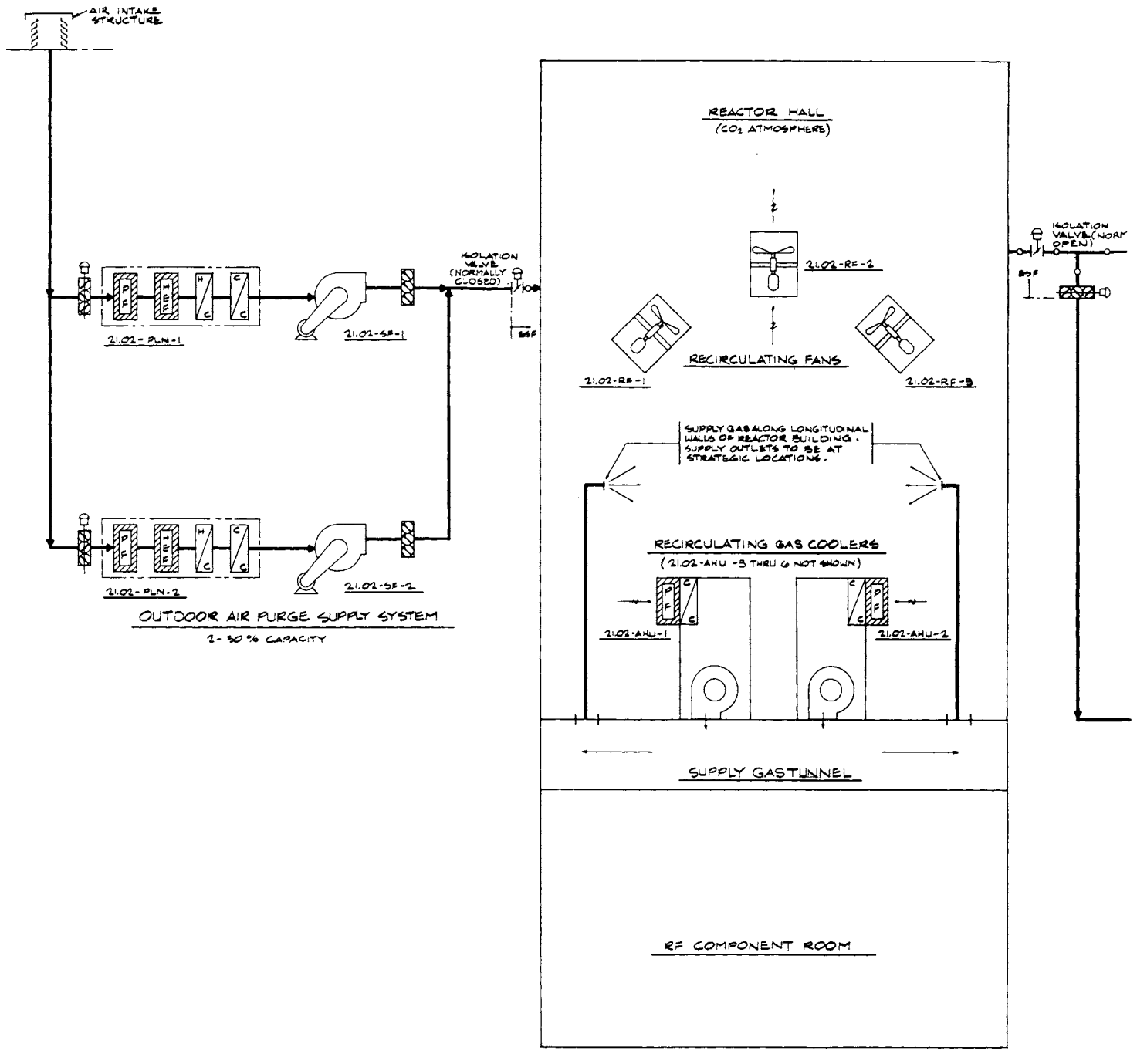

REFERENCES		REFERENCES		REFERENCES		REVISIONS								REVISIONS								
DRAWING NO	DESCRIPTION	DRAWING NO	DESCRIPTION	DRAWING NO	DESCRIPTION	NO	DATE	BY	CHKD	SEC	PROJ	CLIENT	DESCRIPTION	NO.	DATE	BY	CHKD	SEC	PROJ	CLIENT		
														B	7-29-80	MRH	MG			CT	APPROV	
														A	7-29-80	MRH	MG				ISSUED	

ENG-GE-24 (11/78)

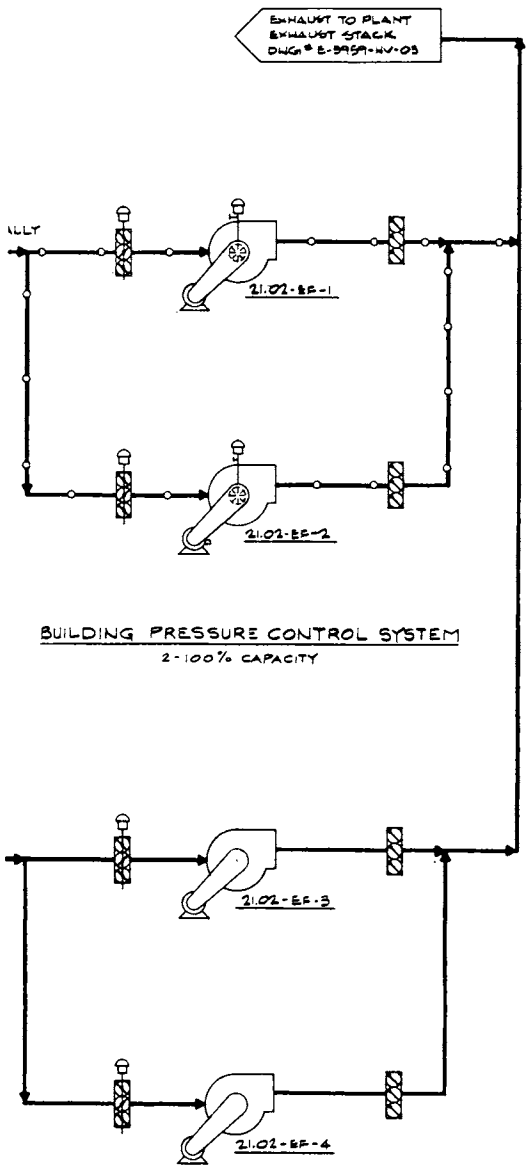

LEGEND

SYMBOL	DESIGNATION
	CENTRIFUGAL FAN
	CENTRIFUGAL FAN WITH VARIABLE INLET VANES (FLOW CONTROL)
	VANEAXIAL FAN
	PREFILTER
	HIGH EFFICIENCY FILTERS
	HIGH EFFICIENCY PARTICULATE ABSOLUTE AIR FILTERS
	BACKDRAFT AIR DAMPER
	CONTROL DAMPER
	WATER OR STEAM HEATING COIL
	WATER COOLING COIL
	ELECTRIC DUCT HEATER
	DEMISTER
	WATER SPRAY FW – FIRE WATER
	CARBON STEEL DUCTWORK (E&F – ENGINEERED SAFETY FEATURE)
	GALVANIZED DUCTWORK

NOTES

1. ATMOSPHERIC TRITIUM IS REMOVED BY LOCALLY INSTALLED ATMOSPHERIC TRITIUM CLEANUP UNITS.
2. IF TRITIUM CONCENTRATION WITHIN THE REACTOR HALL EXCEEDS NORMAL VALUES, BUILDING WILL BE ISOLATED. BUILDING PRESSURE IS NOT CONTROLLED.

DESCRIPTION			
	DRAWN	M. Lehner	7-29-80
	CHECKED	M. Gerlach	7-29-80
VED FOR FINAL REPORT	APVD SECT HD	[illegible]	8-21-80
FOR CLIENT APPROVAL	APVD PROJ MGR	R. Kelly	8-29-80
	APVD MGR	C. Fuller	8-29-80

THE RALPH M. PARSONS COMPANY
PASADENA, CALIFORNIA

ARGONNE NATIONAL LABORATORY
ARGONNE, ILLINOIS
STARFIRE COMMERCIAL TOKAMAK REACTOR

TITLE: BUILDING SERVICES
REACTOR BUILDING
HVAC FLOW DIAGRAM

SCALE: —
ACCOUNT NUMBER: —
JOB NUMBER: 5959-1
REVISION: B
DOCUMENT NUMBER: E-5959-HV-01

Figure 20-14

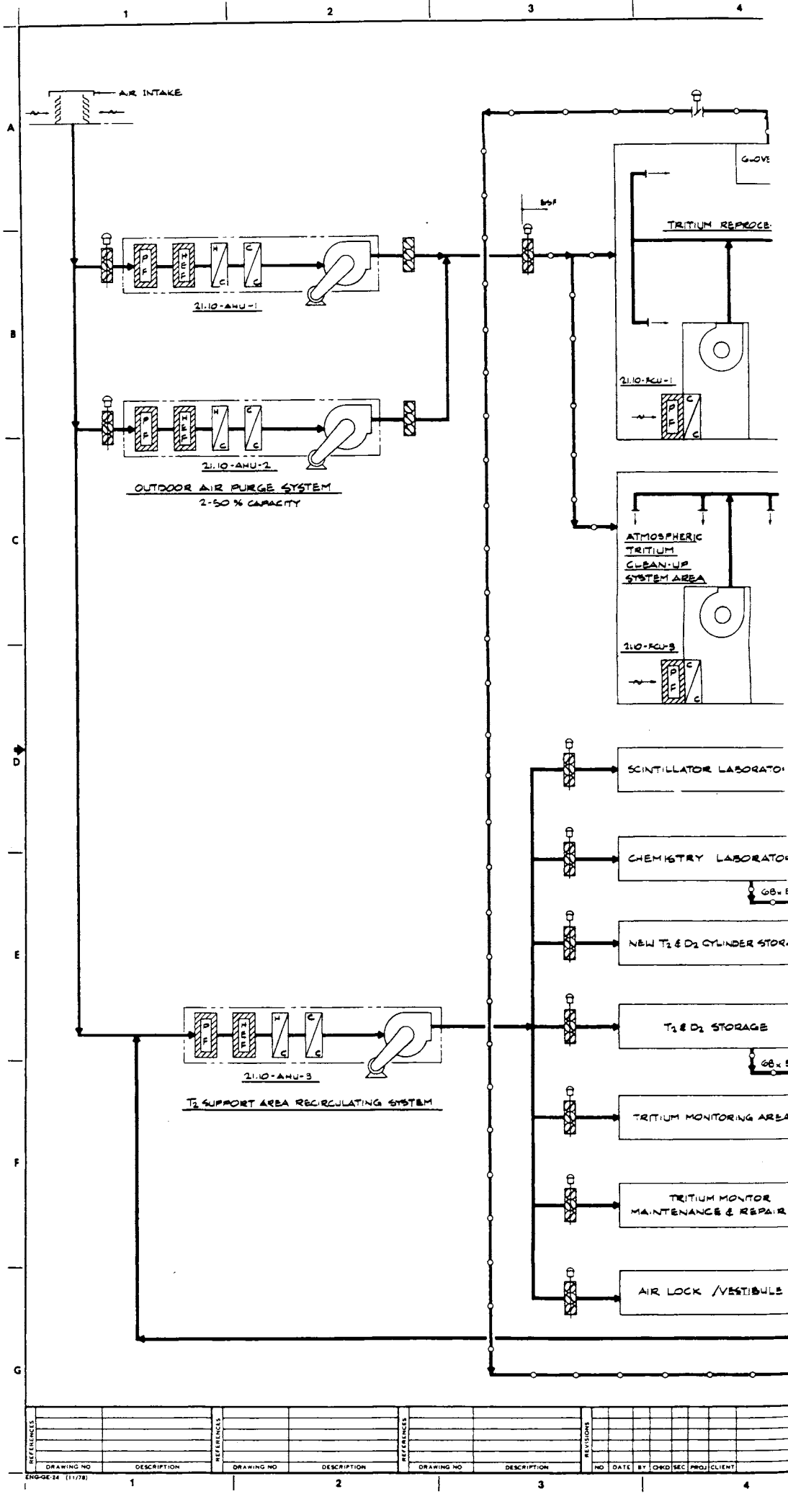
AIR INTAKE
21.10-AHU-1
21.10-AHU-2
OUTDOOR AIR PURGE SYSTEM
2-50 % CAPACITY
TRITIUM REPROCE
21.10-FCU-1
ATMOSPHERIC TRITIUM CLEAN-UP SYSTEM AREA
21.10-FCU-3
SCINTILLATOR LABORATO
CHEMISTRY LABORATO
NEW T2 & D2 CYLINDER STOR
T2 & D2 STORAGE
21.10-AHU-3
T2 SUPPORT AREA RECIRCULATING SYSTEM
TRITIUM MONITORING AREA
TRITIUM MONITOR MAINTENANCE & REPAIR
AIR LOCK /VESTIBULE
REFERENCES
DRAWING NO
DESCRIPTION
REVISIONS
NO
DATE
BY
CHKD
SEC
PROJ
CLIENT
ENG-GE-24 (11/78)

Figure 20-15

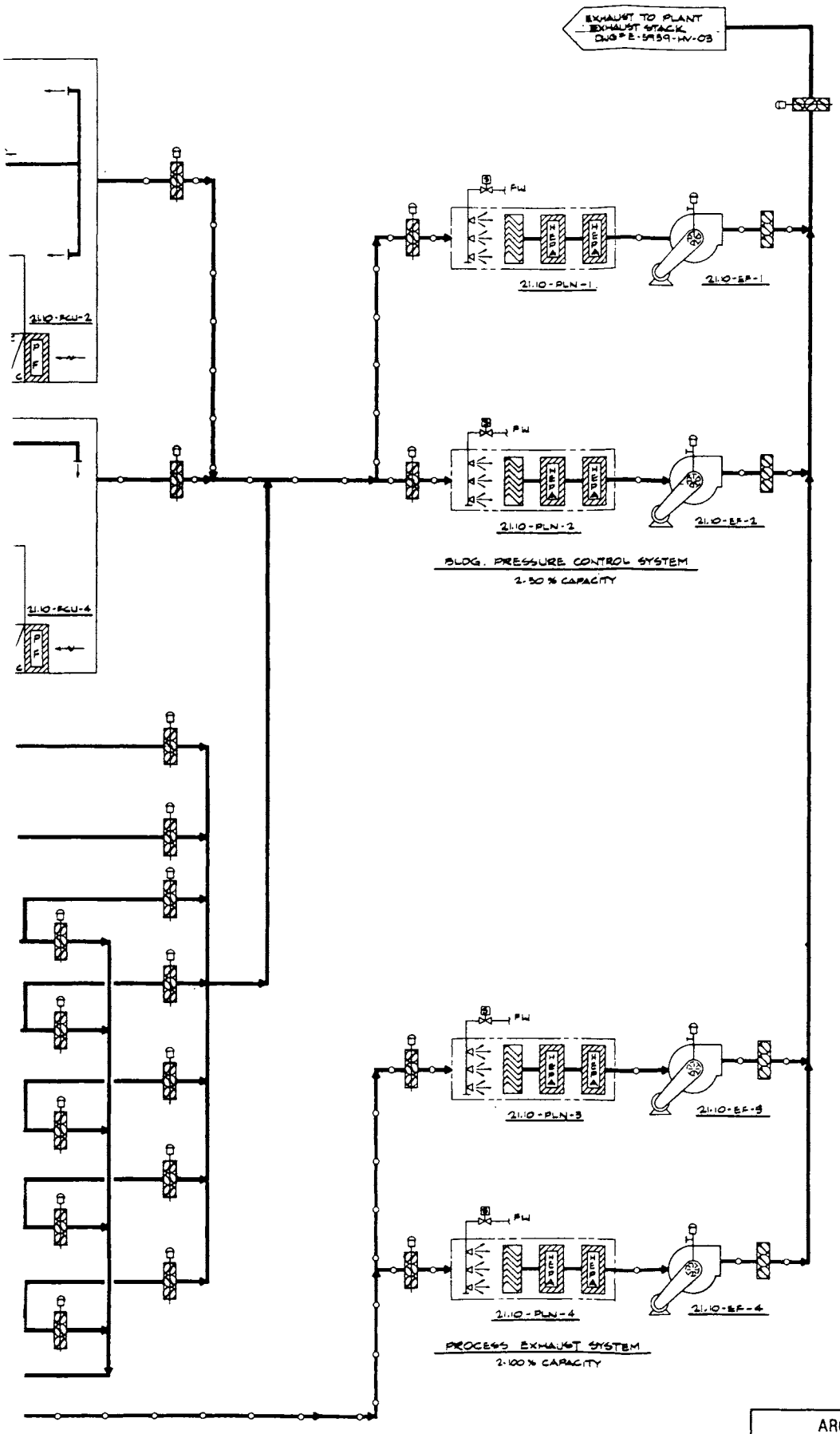

NOTE.

1. TRITIUM REPROCESSING AREA WILL HAVE LOCALLY INSTALLED ATMOSPHERIC TRITIUM CLEANUP UNITS.

REVISIONS								
B	8-23-80	[illegible]	JPM	R/TB	C T		APPROVED FOR FINAL REPORT	
A	7-29-80	[illegible]	MAM				ISSUED FOR CLIENT APPROVAL	
NO.	DATE	BY	CHKD	SEC	PROJ.	CLIENT	DESCRIPTION	

FOR		
DRAWN	[illegible]	7-29-80
CHECKED	[illegible]	7-29-80
APVD SECT HD	[illegible]	7-29-80
APVD PROJ MGR	[illegible]	7-29-80
APVD MGR	[illegible]	7-29-80

AMP

THE RALPH M PARSONS COMPANY
PASADENA, CALIFORNIA

ARGONNE NATIONAL LABORATORY
ARGONNE, ILLINOIS
STARFIRE COMMERCIAL TOKAMAK REACTOR

TITLE: BUILDING SERVICES
TRITIUM REPROCESSING BUILDING
HVAC FLOW DIAGRAM

SCALE: —
ASSEMBLY NUMBER: —
JOB NUMBER: 5959-1
DOCUMENT NUMBER: E-5959-HV-02
REV. LEVEL: A

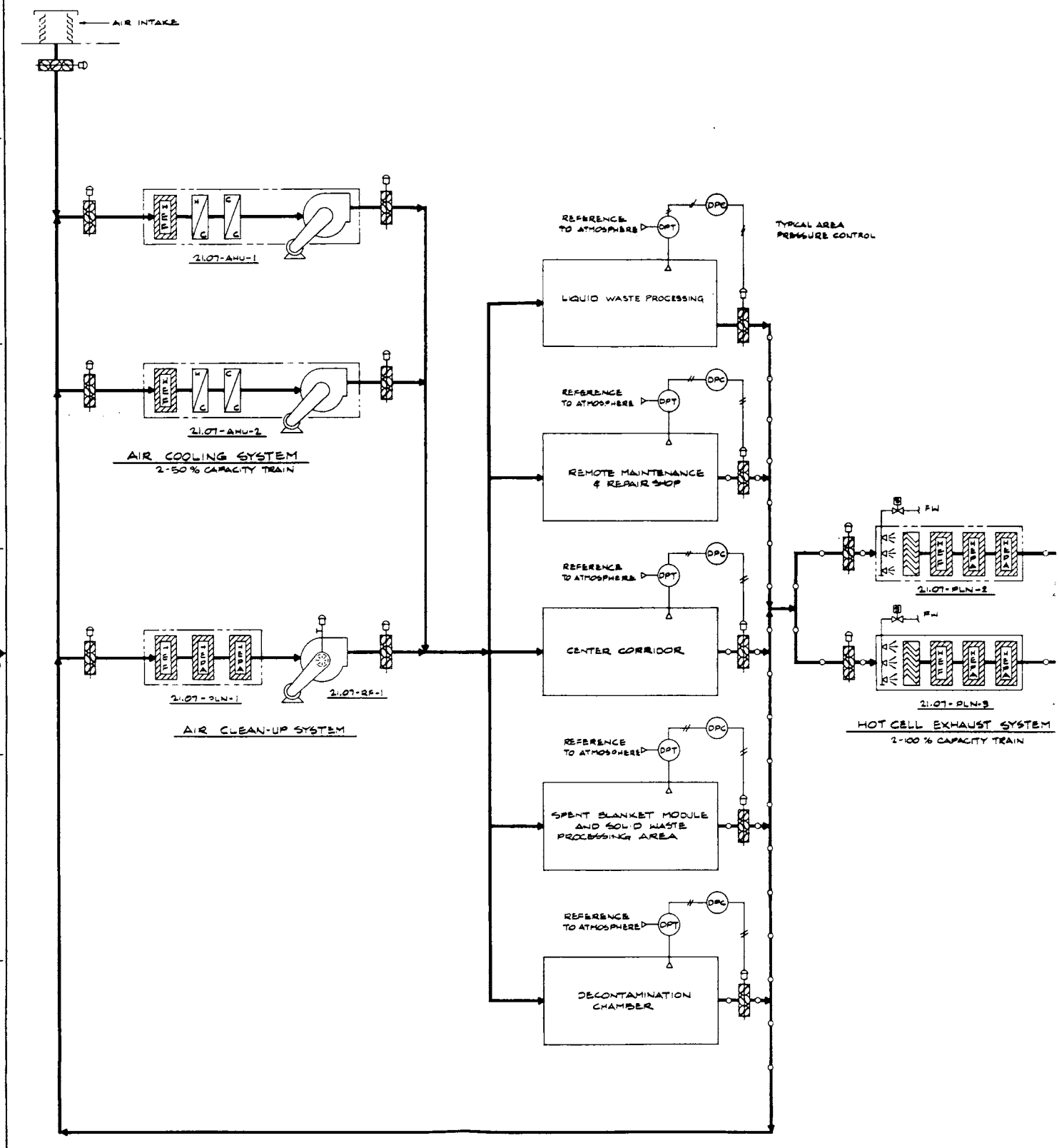

REFERENCES		REFERENCES		REFERENCES		REVISIONS									REVISIONS								
DRAWING NO	DESCRIPTION	DRAWING NO	DESCRIPTION	DRAWING NO	DESCRIPTION	NO	DATE	BY	CHKD	SEC	PROJ	CLIENT	DESCRIPTION		B	7-27-80	DMB	MGM	JTM	9970	CT	APPRO	
															A	7-27-80	DMB	MGM				APPRO	
															NO	DATE	BY	CHKD	SEC	PROJ	CLIENT		

ENG-GE-24 (11/78)

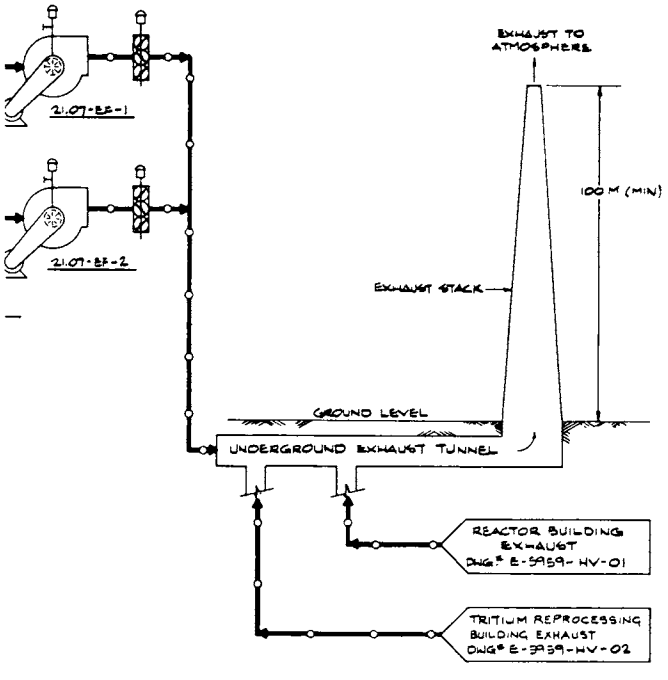

ARGONNE NATIONAL LABORATORY
ARGONNE, ILLINOIS
STARFIRE COMMERCIAL TOKAMAK REACTOR

THE RALPH M. PARSONS COMPANY
PASADENA, CALIFORNIA

TITLE: BUILDING SERVICES
HOT CELL & RADIOACTIVE WASTE PROCESSING SYSTEM
HVAC FLOW DIAGRAM

SCALE: — | ACCOUNT NUMBER: — | JOB NUMBER: 5959-1 | REV-SCH: B

DOCUMENT NUMBER: E-5959-HV-03

DESCRIPTION: ED FOR FINAL REPORT; FOR CLIENT APPROVAL

Figure 20-16

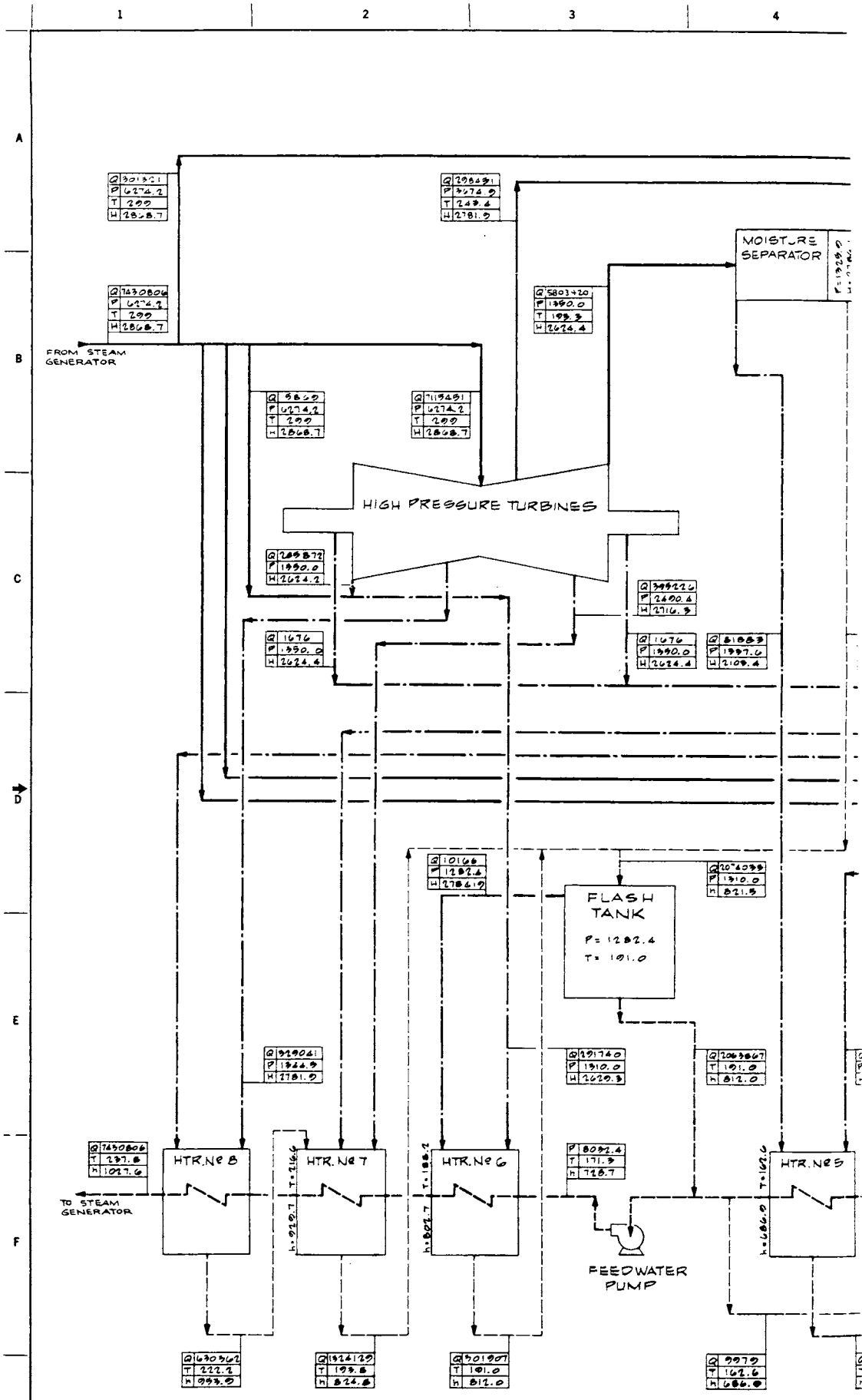

NOTE

VALVE BEST POINT EFFICIENCY = $\frac{1940990 \times 100}{4000000}$ = 39.8% (NOMINAL)

(W/MOTOR DRIVEN FEEDWATER PUMP#) = $\frac{1964000 \times 100}{4000000}$ = 34.1%

POTENTIAL EFFICIENCY WITH ADDITIONAL MOISTURE SEPARATION BETWEEN TURBINE STAGES IS 36%. REFER TO SECTION 20.4.1, CONCEPTUAL DESIGN REPORT

Figure 20-17

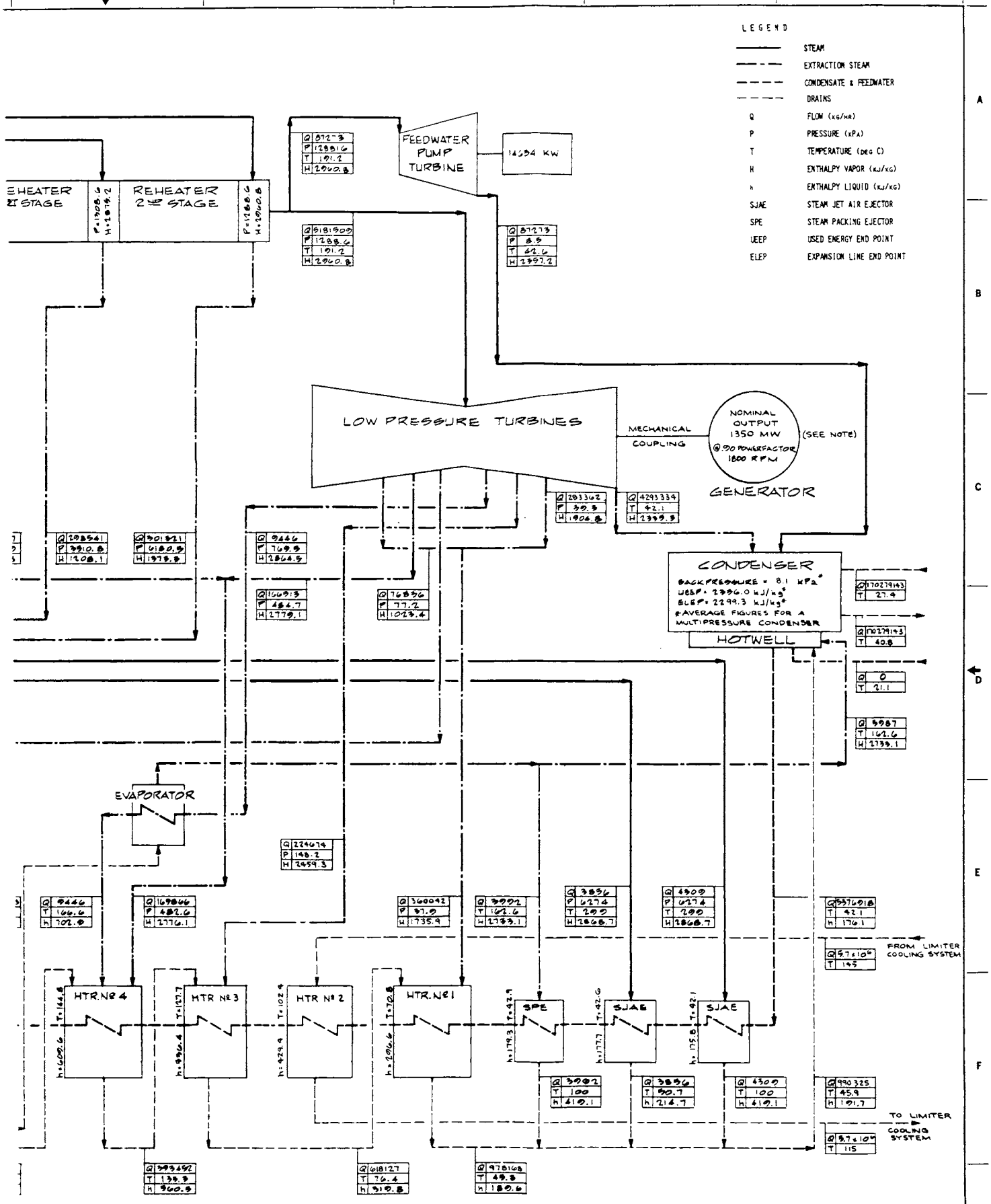

REVISIONS								
B	8-29-80	C.H.	J.D.					APPROVED FOR FINAL REPORT
A	7-29-80	J.B.	J.D.					ISSUED FOR CLIENT APPROVAL
NO	DATE	BY	CHKD	SEC	PROJ	CLIENT		DESCRIPTION

DRAWN	J. Bertram	9-30-80
CHECKED	J. Kelly	8-26-80
APVD SECT HD	[illegible]	8-26-80
APVD PROJ MGR	[illegible]	8-29-80
MGR C	[illegible]	8-29-80

RMP

THE RALPH M. PARSONS COMPANY
PASADENA, CALIFORNIA

ARGONNE NATIONAL LABORATORY
ARGONNE, ILLINOIS
STARFIRE COMMERCIAL TOKAMAK REACTOR

TITLE: MECHANICAL
POWER CONVERSION CYCLE
HEAT BALANCE

SCALE: —
ASSEMBLY NUMBER: —
JOB NUMBER: 5959-1
REVISION: B
DOCUMENT NUMBER: E-5959-ME-01

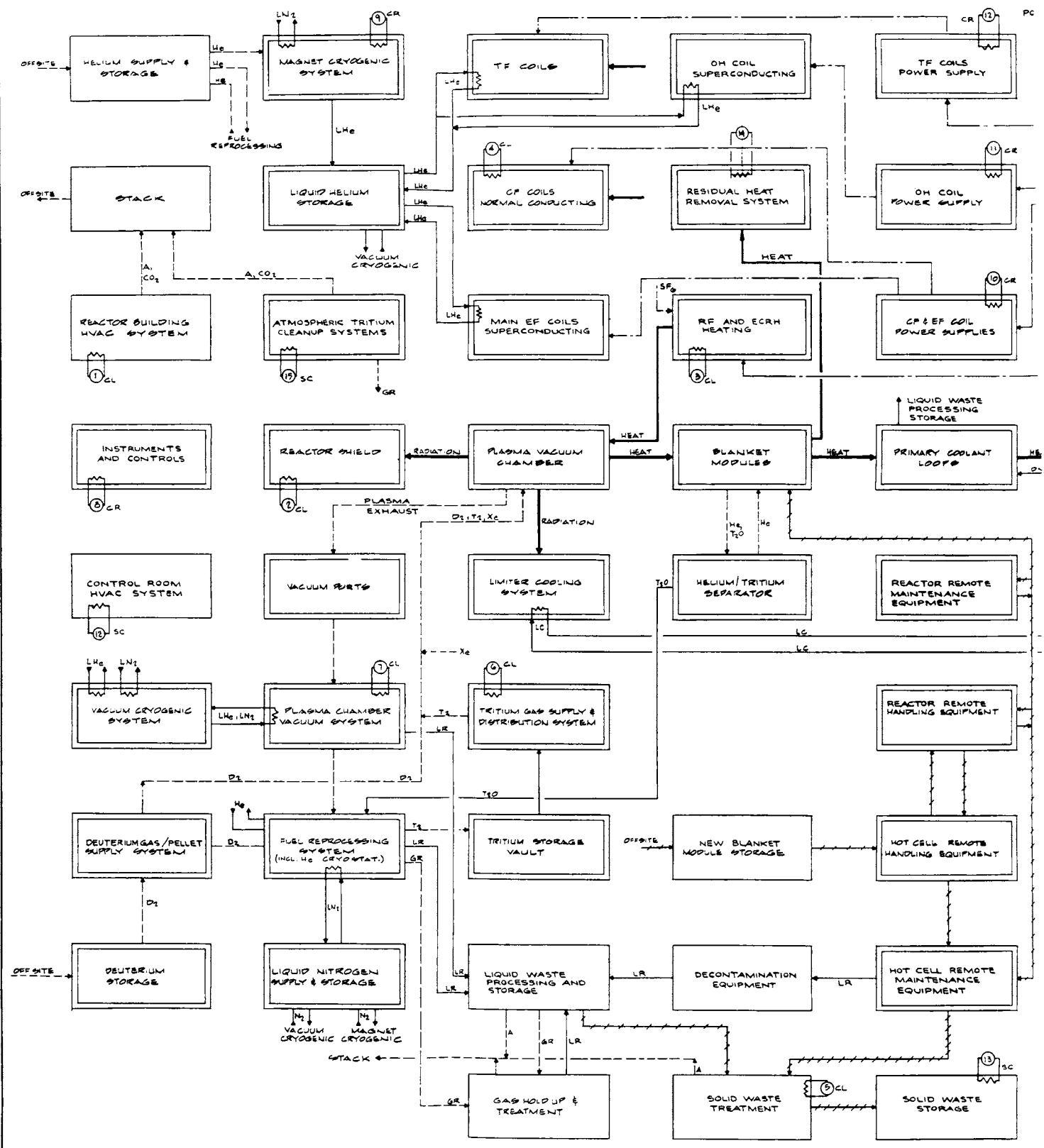

REFERENCES		REFERENCES		REFERENCES		REVISIONS								REVISIONS								
DRAWING NO	DESCRIPTION	DRAWING NO	DESCRIPTION	DRAWING NO	DESCRIPTION	NO.	DATE	BY	CHKD	SEC	PROJ	CLIENT	DESCRIPTION	NO	DATE	BY	CHKD	SEC	PROJ	CLIENT		
														B	8-29-80	C.K	J.D			C.T	APPRO	
														A	7-29-80	J.B	J.D				ISSUED	

EHC-GE-248 (11/78)

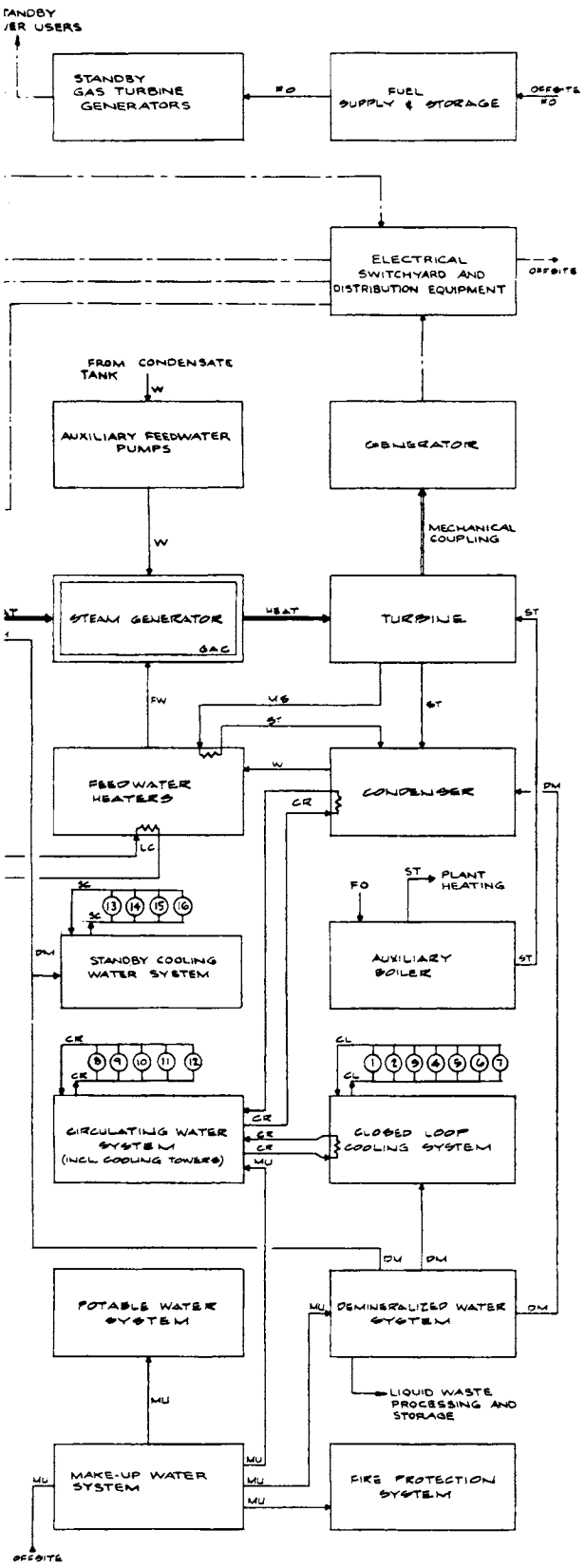

LEGEND & ABBREVIATIONS

———	LIQUID FLOW
- - - -	GAS FLOW
—·—·—	ELECTRICAL
—^—^—	SOLID OR EQUIPMENT FLOW
═══	HEAT OR RADIATION
═══	MECHANICAL COUPLING
A	AIR
ATC	ATMOSPHERIC TRITIUM CLEANUP
CL	CLOSED-LOOP COOLING SYSTEM
CO_2	CARBON DIOXIDE
CR	CIRCULATING WATER SYSTEM
D_2	DEUTERIUM GAS
DM	DEMINERALIZED WATER SYSTEM
ECRH	ELECTRON CYCLOTRON RESONANCE HEATING
FO	FUEL OIL
FW	FEEDWATER
GR	GASEOUS WASTE
He	HELIUM
LC	LIMITER COOLING
LHe	LIQUID HELIUM
LN_2	LIQUID NITROGEN
LR	LIQUID WASTE
MS	MAIN STEAM
MU	MAKE UP WATER
N_2	NITROGEN
SC	STANDBY COOLING WATER SYSTEM
SF_6	SULFUR FLUORIDE
ST	STEAM
T_2	TRITIUM GAS
T_2O	TRITIUM OXIDE
W	CONDENSATE
Xe	XENON GAS

DESCRIPTION			
	DRAWN	J. Brink	5-30-80
	CHECKED	J. Dalkins	8-16-80
	APVD SECT HD	AWR	8-16-80
	APVD PROJ MGR	WTTBurr	1-29-80
	MGAC		1-29-80
...VED FOR FINAL REPORT			
...FOR CLIENT APPROVAL			

RMP
THE RALPH M. PARSONS COMPANY
PASADENA, CALIFORNIA

ARGONNE NATIONAL LABORATORY
ARGONNE, ILLINOIS
STARFIRE COMMERCIAL TOKAMAK REACTOR

TITLE: MECHANICAL
REACTOR & SUPPORT SYSTEMS
BLOCK DIAGRAM

SCALE: —
SUBSIDIARY NUMBER: —
JOB NUMBER: 5959-1
REVISION: B
DOCUMENT NUMBER: E-5959-ME-02

Figure 20-18

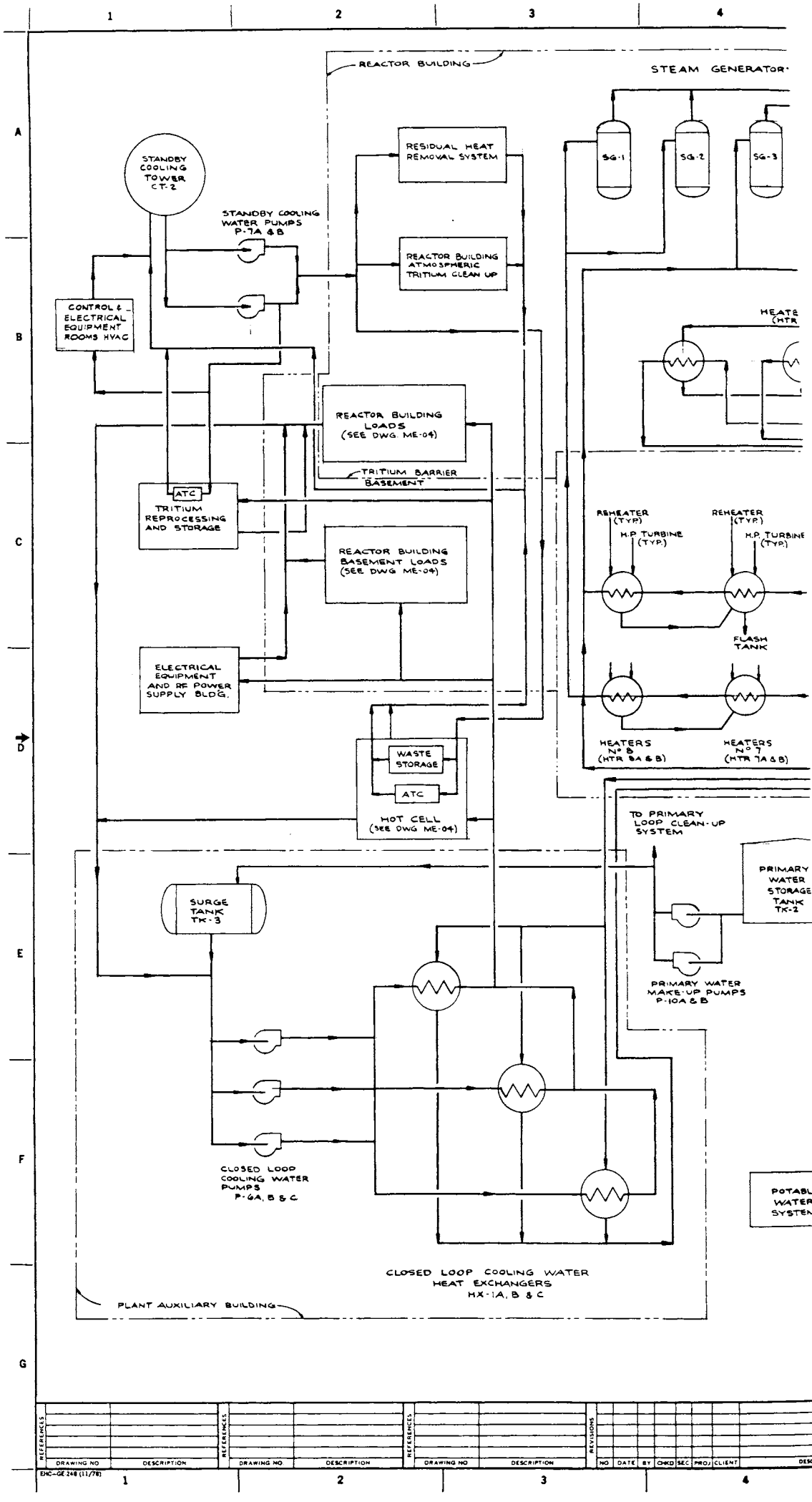
REACTOR BUILDING
STEAM GENERATOR
STANDBY COOLING TOWER CT-2
STANDBY COOLING WATER PUMPS P-7A & B
RESIDUAL HEAT REMOVAL SYSTEM
REACTOR BUILDING ATMOSPHERIC TRITIUM CLEAN UP
SG-1
SG-2
SG-3
CONTROL & ELECTRICAL EQUIPMENT ROOMS HVAC
REACTOR BUILDING LOADS (SEE DWG. ME-04)
TRITIUM BARRIER BASEMENT
ATC
TRITIUM REPROCESSING AND STORAGE
REACTOR BUILDING BASEMENT LOADS (SEE DWG ME-04)
REHEATER (TYP.)
H.P. TURBINE (TYP.)
FLASH TANK
ELECTRICAL EQUIPMENT AND RF POWER SUPPLY BLDG.
HEATERS No 8 (HTR 8A & B)
HEATERS No 7 (HTR 7A & B)
WASTE STORAGE
ATC
HOT CELL (SEE DWG ME-04)
TO PRIMARY LOOP CLEAN-UP SYSTEM
PRIMARY WATER STORAGE TANK TK-2
SURGE TANK TK-3
PRIMARY WATER MAKE-UP PUMPS P-10A & B
CLOSED LOOP COOLING WATER PUMPS P-6A, B & C
CLOSED LOOP COOLING WATER HEAT EXCHANGERS HX-1A, B & C
PLANT AUXILIARY BUILDING
REFERENCES
DRAWING NO
DESCRIPTION
REVISIONS
NO
DATE
BY
CHKD
SEC
PROJ
CLIENT

Figure 20-19

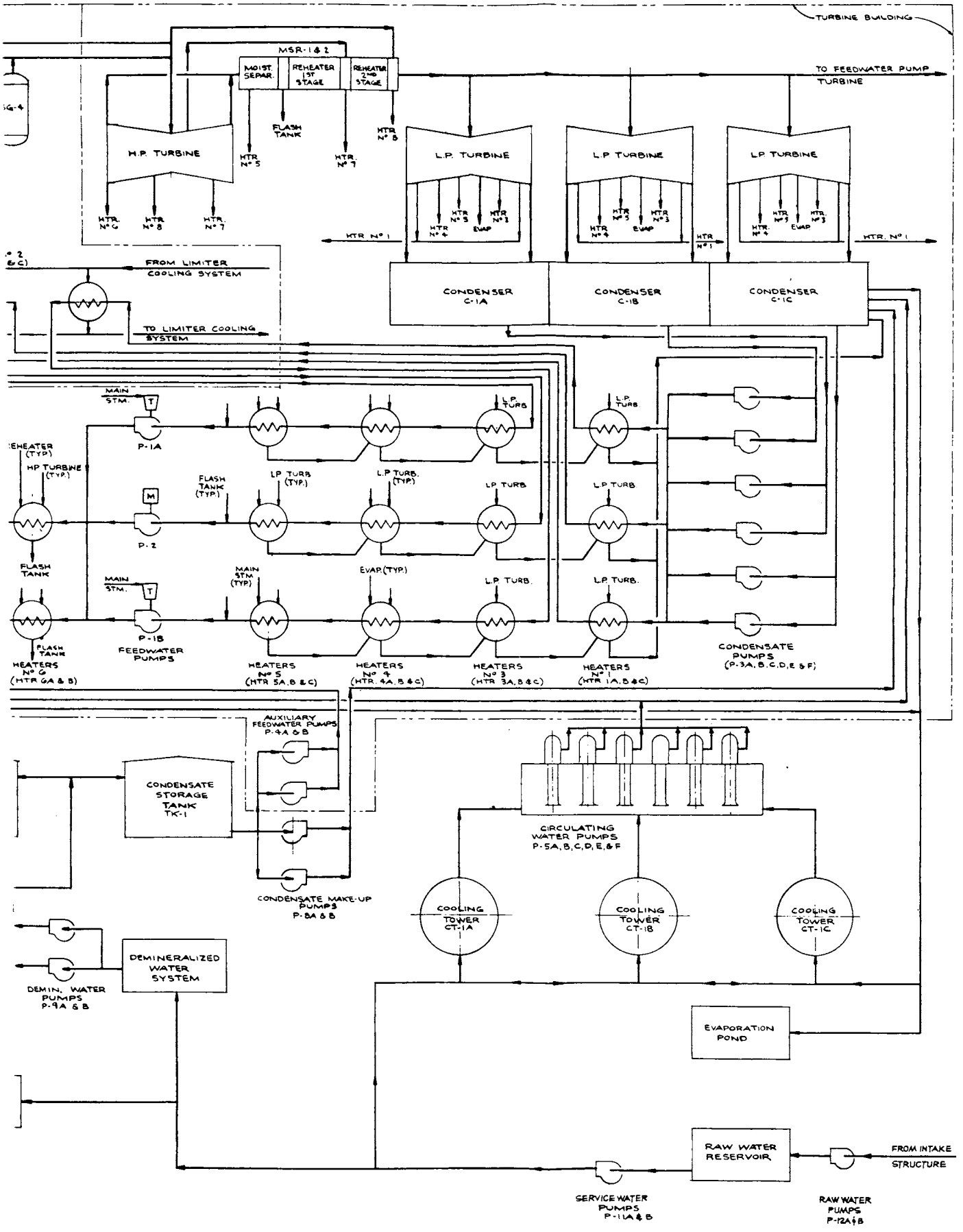

NO.	DATE	BY	CHKD	SEC	PROJ	CLIENT	DESCRIPTION
B	9-29-80	C.K.	J.D.				APPROVED FOR FINAL REPORT
A	7-29-80	C.K.	J.D.				ISSUED FOR CLIENT APPROVAL

DRAWN	C.K.	6-5-80
CHECKED	J. Dalton	8-26-80
APV'D SECT. HD		9-26-80
APV'D PROJ. MGR		9-29-80
MO&C		9-29-80

THE RALPH M. PARSONS COMPANY
PASADENA, CALIFORNIA

ARGONNE NATIONAL LABORATORY
ARGONNE, ILLINOIS
STARFIRE COMMERCIAL TOKAMAK REACTOR

TITLE: MECHANICAL
POWER CONVERSION SYSTEM
& COOLING WATER COMPOSITE
FLOW DIAGRAM

SCALE: —
AUXILIARY NUMBER: —
JOB NUMBER: 5959-1
DOCUMENT NUMBER: E-5959-ME-03
REVISION: B

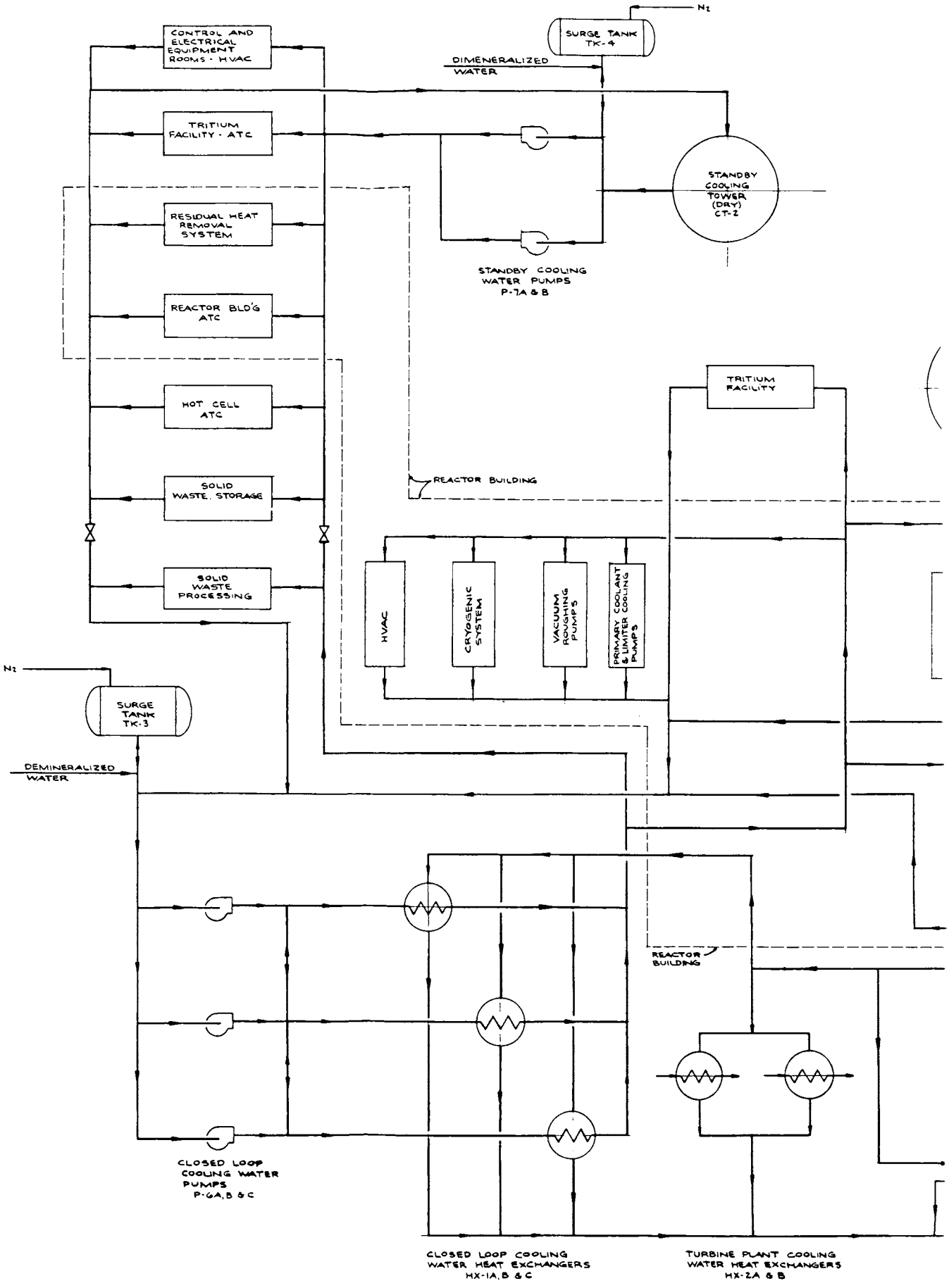

REFERENCES		REFERENCES		REFERENCES		REVISIONS								REVISIONS								
DRAWING NO	DESCRIPTION	DRAWING NO	DESCRIPTION	DRAWING NO	DESCRIPTION	NO.	DATE	BY	CHKD	SEC	PROJ	CLIENT	DESCRIPTION	NO.	DATE	BY	CHKD	SEC	PROJ	CLIENT		
														B	8/26/80	C.K.	J.D.			C.T.	APPR	
														A	7-29-80	C.K.	J.D.					

EHC-GE 248 (11/78)

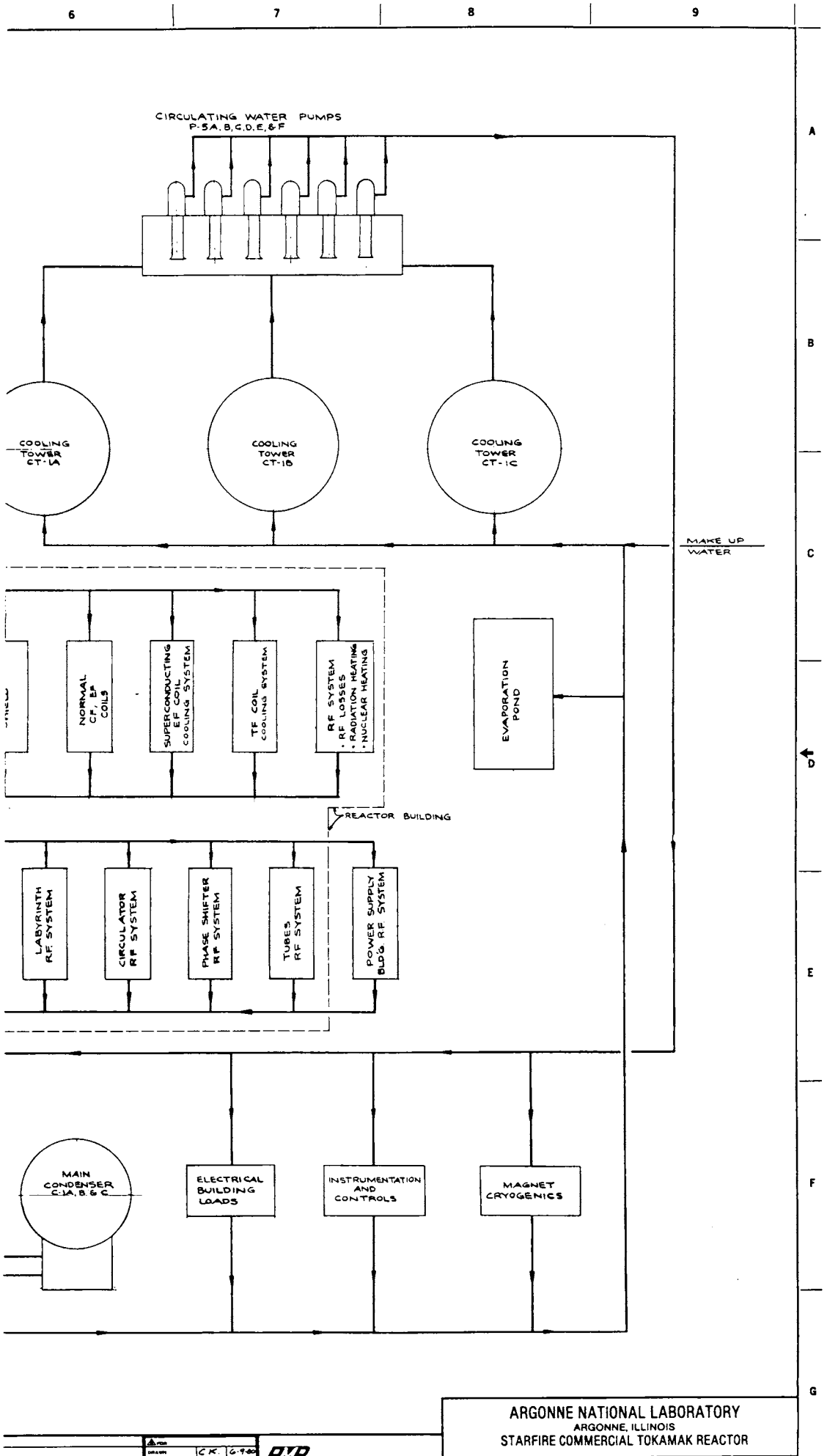

ARGONNE NATIONAL LABORATORY
ARGONNE, ILLINOIS
STARFIRE COMMERCIAL TOKAMAK REACTOR

THE RALPH M. PARSONS COMPANY
PASADENA, CALIFORNIA

TITLE: MECHANICAL
ESSENTIAL COOLING WATER SYSTEMS
FLOW DIAGRAM

SCALE: - | AUXILIARY NUMBER: - | JOB NUMBER: 5959-1 | REVISION: B
DOCUMENT NUMBER: E-5959-ME-04

DRAWN: C.K. 6-9-80
CHECKED: J. deWitt 8-26-80
APVD SECT: HMC 8-26-80
APVD PROJ MGR: 9-29-80
HDAC: 9-29-80

DESCRIPTION
...VED FOR FINAL REPORT
... FOR CLIENT APPROVAL

Figure 20-20

20.8 OUTLINE SPECIFICATIONS

Outline specifications for balance of plant structures, system, and components were developed. These formed the bases for balance of plant costing. Excerpts for electrical and mechanical equipment are reproduced herein with the full specifications available, in a separate report, upon request.

20.8.1 Architectural

Available in a separate report upon request.

20.8.2 Civil/Structure

Available in a separate report upon request.

20.8.3 Building Services

Available in a separate report upon request.

20.8.4 Mechanical

Outline specifications for mechanical equipment are presented below:

(1) Turbine-Generator (TG-1)

Quantity:	1
Throttle steam design pressure:	6.3 MPa
Throttle steam design temperature:	299.0°C
Maximum guaranteed turbine rating:	1440 MWe
Generator capability:	1600 MVA
Shaft speed:	1800 rpm
Power factor:	0.9
Type of exciter:	Static or brushless
Generator cooling:	Hydrogen and water
Last stage blade:	1.1 m approximately
Back pressure:	8.1 kPa, average

(2) Main Condenser (C-1A,B,C)

Quantity:	1, 3-shell
Type:	Multi-pressure
Back pressures:	5.50 kPa, 7.02 kPa, 8.50 kPa
Number of tube passes per shell:	1
Number of tubes per shell:	36,310
Tube length:	17.4 m

Tube material:	90-10 copper-nickel 18 BWG
Tube diameter:	2.86 cm
Hotwell:	Deaerating
Hotwell capacity:	45,400 liters
Circulating water temperature:	27.4°C
Temperature range:	13.4°C

(3) Condensate Pumps (P-3A,B,C,D,E,F)

Quantity:	6
Type:	Vertical, centrifugal
Capacity:	525 liters/sec at 305 m TDH
Driver:	Electric motor, 1865 kW

(4) Feedwater Pumps (P-1A,B; P-2 Motor Driven)

Quantity:	3
Type:	Centrifugal, horizontal, split case
Capacity:	1035 liters/sec 640 m TDH
Materials	
Case:	Cast steel
Impeller:	Stainless steel
Shaft:	Stainless steel
Driver	
One pump:	Electric motor, 7600 kW
Two pumps:	Steam turbine, 7600 kW

(5) 1st Point Feedwater Heater (HTR 1A,B,C)

Quantity:	3
Type:	Straight tube
Design pressure	
Shell:	0.2 MPa
Vacuum tube:	4.5 MPa
Material	
Shell:	CS
Tubes:	304 SS
Tube outside diameter nominal:	1.91 cm
Tube wall thickness:	0.13 cm
Number of tube passes:	2
Heat flow:	60 MW

(6) Limiter Cooling Feedwater Heaters (HTR 2A,B,C)

Quantity:	3
Type:	U-tube, vertical arrangement
Design pressure	
Shell:	4.5 MPa
Tube:	7.3 MPa
Material	
Shell:	304 SS
Tube:	304 SS
Tube outside diameter nominal:	1.91 cm
Tube Wall thickness:	0.13 cm
Number of tube passes:	2
Heat flow:	70 MW

(7) 3rd Point Feedwater Heater (HTR 3A,B,C)

Quantity:	3
Type:	Straight tube
Design pressure	
Shell:	0.2 MPa
Tube:	4.5 MPa
Material	
Shell:	CS
Tube:	304 SS
Tube outside diameter nominal:	1.91 cm
Tube wall thickness:	0.13 cm
Number of passes:	2
Heat flow:	55 MW

(8) 4th Point Feedwater Heater (HTR 4A,B,C)

Quantity:	3
Type:	Straight tube
Design pressure	
Shell:	0.9 MPa
Tube:	4.5 MPa
Material	
Shell:	CS
Tube:	304 SS
Tube outside diameter nominal:	1.91 cm

(8) 4th Point Feedwater Heater (HTR 4A,B,C) (Contd)

Tube wall thickness:	0.13 cm
Heat flow:	40 MW

(9) 5th Point Feedwater Heater (HTR 5A,B,C)

Quantity:	3
Type:	Straight tube
Design pressure	
Shell:	1.2 MPa
Tube:	4.5 MPa
Material	
Shell:	CS
Tube:	304 SS
Tube outside diameter nominal:	1.91 cm
Tube wall thickness:	0.13 cm
Number of passes:	2
Heat flow:	40 MW

(10) 6th Point Feedwater Heater (HTR 6A,B)

Quantity:	2
Type:	U tube
Design pressure	
Shell:	2.0 MPa
Tube:	12.1 MPa
Material	
Shell:	CS
Tube:	304 SS
Tube outside diameter nominal:	1.91 cm
Tube wall thickness:	0.13 cm
Number of passes:	2
Heat flow:	80 MW

(11) 7th Point Feedwater Heater (HTR 7A,B)

Quantity:	2
Type:	U tube
Design pressure	
Shell:	5.3 MPa
Tube:	12.1 MPa

(11) 7th Point Feedwater Heater (HTR 7A,B) (Contd)

Material	
Shell:	CS
Tube:	304 SS
Tube outside diameter nominal:	1.91 cm
Tube wall thickness:	0.13 cm
Number of passes:	2
Heat flow:	140 MW

(12) 8th Point Feedwater Heater (HTR 8A,B)

Quantity:	2
Type:	U Tube
Design pressure	
Shell:	9.3 MPa
Tube:	12.1 MPa
Material	
Shell:	CS
Tube:	304 SS
Tube outside diameter nominal:	1.91 cm
Tube wall thickness:	0.13 cm
Number of passes:	2
Heat flow:	105 MW

(13) Main Cooling Tower (CT-1A,B,C)

Quantity:	3
Type:	Hyperbolic, natural draft
Material:	Reinforced concrete
Basin diameter:	150.0 m
Height:	165.0 m
Flow rate:	16,400 liters/sec (per tower)
Range:	13.4°C
Water temperature:	27.4°C
Approach:	4.6°C
Wet-bulb temperature:	22.8°C

(14) Circulating Water Pumps (P-5 A,B,C,D,E,F)

Quantity:	6
Type:	Vertical wet pit, centrifugal
Capacity:	8400 liter/sec at 100 m TDH
Driver:	Electric motor, 6000 kW

(15) Closed Loop Cooling Water Pump (P-6 A,B,C)

Quantity:	3
Type:	Horizontal, end suction, centrifugal
Capacity:	950 liters/sec at 60 m TDH
Driver:	Electric motor, 670 kW

(16) Closed Loop Cooling Water Heat Exchanger (HX-1A,B,C)

Quantity:	3
Type:	U Tube
Design pressure:	1.0 MPa
Material	
Shell:	CS
Tube:	304 SS
Closed loop water temperature	
Inlet:	60°C
Outlet:	43.3°C
Heat flow:	70.0 MW

(17) Closed Loop Cooling Surge Tank (TK-3)

Quantity:	1
Capacity:	11,355 liters
Dimensions:	2-m diameter by 2.5-m high

(18) Standby Cooling Tower (CT-2)

Quantity:	1 with 6 cells
Type:	Dry
Tube material:	SS
Fan driver:	Electric motor, 75 kW each
Heat flow:	70 MW

(18) Standby Cooling Tower (CT-2) (Contd)

Water temperature:	43.3°C
Range:	33.4°C
Flow rate:	500 liters/sec
Approach:	11.1°C
Wet-bulb temperature:	32.2°C

(19) Standby Cooling Water Pumps (P-7A,B)

Quantity:	2
Type:	Horizontal, end suction, centrifugal
Capacity:	500 liters/sec at 65 m TDH
Driver:	Electric motor, 375 kW

(20) Standby Cooling Water Surge Tank (TK-4)

Quantity:	1
Capacity:	7600 liters
Dimensions:	2-m diameter by 2.5-m high

(21) Raw Water Pumps (P-12A,B)

Quantity:	2
Type:	Vertical, wet pit, centrifugal
Capacity:	1600 liters/sec at 20 m TDH
Driver:	Electric motor, 375 kW

(22) Service Water Pumps (P-11A,B)

Quantity:	2
Type:	Horizontal, end suction, centrifugal
Capacity:	1600 liters/sec at 10 m TDH
Driver:	Electric motor, 188 kW

(23) Auxiliary Feedwater Pumps (P-4A,B)

Quantity:	2
Type:	Horizontal, end suction, centrifugal
Capacity:	40 liters/sec at 975 m TDH
Driver:	Electric motor, 600 kW

(24) Auxiliary Feedwater Pump (P-13)

Quantity:	1
Type:	Horizontal, end section, centrifugal
Capacity:	70 liters/sec at 1036 m TDH
Driver:	Steam turbine, 970 kW

(25) Condensate Storage Tank (TK-1)

Quantity:	1
Capacity:	1,703,250 liters
Dimensions:	15-m diameter by 12-m high

(26) Gas-Turbine-Generators (TG-1, 2)

Quantity:	2
Rating:	ISO-Base 10.6 MW each
Service:	Standby
Type:	Simple cycle - single or split shaft
Voltage:	4160 V
Power factor:	0.85
Frequency:	60 hz, 3-phase
Start:	Automatic start for dead load pickup within 1 minute
Operational testing:	Capable of synchronization with system

(27) Balance of Plant Piping

Specifications for principal piping follow:

(a) Main Steam and Feedwater Systems

Design pressure:	10.3 MPa
Material:	2-1/4% chrome, 1% moly
Classification:	ASTM A-155, grade 2-1/4% chrome
6.35 cm and smaller:	Schedule 80
7.62 cm and larger:	Schedule 160

(27) Balance of Plant Piping (Contd)

(b) Closed Loop and Standby Cooling Water Systems

Design pressure:	1.7 MPa
Material:	304 SS
Classification:	ASTM A-312, Grade TP304
All sizes:	Schedule 10 S

(c) Miscellaneous Steel Piping

Design pressure:	1.7 MPa
Material:	CS
Classification:	ASTM A-106, Grade A
5.08 cm and smaller:	Schedule 80
6.35 cm and larger:	Schedule 40

20.8.5 Electrical

Outline specifications for electrical equipment are presented below.

20.8.5.1 Main Generator And Connections

(1) See item 20.8.4 (1).

(2) Generator Breaker

The generator breaker is the indoor type, rated 36 kV, 48 kA, 60 hz, 250 kA rms symmetrical interrupting capacity, and 1200-kA peak momentary. The breaker consists of three poles, and is group operated and mounted in line with the isolated phase bus (main generator leads). Accessories include the compressed air system for breaker operation and a cooling water system for breaker cooling.

(3) Main Generator Leads

The main generator leads consist of isolated phase buses rated 40 kA, 26 kV, 3-phase, 60 hz, 400 kA rms asymmetrical momentary, 200 kV BIL, 50°C conductor rise and 30°C enclosure rise. The bus has a continuous metal enclosure containing a bare aluminum conductor with suitable insulators and supports. The bus is force cooled. A redundant forced-air-to-water cooling system is included. The tap

buses to the various power transformers are the same as above, except they are self-cooled and rated 10 kA continuous and 700 kA rms, asymmetrical momentary. Accessories include potential trans-transformers and surge protection equipment in individual compartments. Also included is a neutral grounding cubicle containing a 200-kVA distribution transformer and a 10-minute-rated grounding resistor. Necessary details for terminating the bus at the generator and at the transformers are supplied.

(4) Main Electrical Control Board

The main electrical control board provides an operating center for the generator, and energization of main power, auxiliary, and reserve transformers, and auxiliary buses. The board is a free-standing duplex tunnel type control board and contains control and selector switches for synchronizing the unit and all protective relays, control, and indicating devices required to realize the unit protection and monitoring of system parameters.

20.8.5.2 High-Voltage Switchyard

The high-voltage switchyard, which includes the gas-filled bus runs to the terminals of the generator step-up and reserve station transformers, is outside the scope of this specification.

20.8.5.3 Auxiliary Electrical Power Supply and AC Distribution System

(1) Power Transformers

All power transformers are forced oil-air cooled (FOA), 65°C rise outdoor units and designed for station auxiliary service, as well as meeting the requirements of the Industry Loading Guide ANSI C57.12.14. Each secondary winding is provided with a stainless steel, neutral grounding resistor rated 800 A, 10 seconds and 10 or 3 ohms, as applicable. Reserve station transformers have pro-provisions for gas-filled bus duct connections. All transformers have a fault pressure relay and winding temperature equipment. Transformers are rated as follows:

(a) Auxiliary Transformers No. 1, 2, 3, and 4 (3-Winding):

- H-Winding: 90-MVA, 26-kV, delta-connected, 200-kV BIL
- X-, Y-Windings: 45-MVA, 13.8-kV, wye-connected, 110-kV BIL
- Impedance: HX = HY = 11.2% at 90 MVA

(b) Auxiliary Transformer No. 5 (3-Winding):

- H-Winding: 40-MVA, 26-kV, delta-connected, 200-kV BIL
- X-, Y-Windings: 20-MVA, 4.16-kV, wye-connected, 75-kV BIL
- Impedance: HX = HY = 16.4% at 40 MVA

(c) Reserve Station Transformer No. 1 (4-Winding):

- H-Winding: 90-MVA, 345-kV, wye-connected, 1175-kV BIL
- X-, Y-Windings: 45-MVA, 13.8-kV, wye-connected, 110-kV BIL
- Z-Winding: 31.5-MVA, 13.8-kV, delta-connected, 110-kV BIL
- Impedance: HX = HY = 15.2% at 90 MVA

(d) Reserve Station Transformer No. 2 (4-Winding):

Same as Reserve Station Transformer No. 1, except HX and HY impedance equals 22% at 90 MVA.

(e) Reserve Station Transformer No. 3 (4-Winding):

- H-Winding: 40-MVA, 345-kV, wye-connected, 1175-kV BIL
- X-, Y-Windings: 20-MVA, 4.16-kV, wye-connected, 75-kV BIL
- Z-Winding 14-MVA, 4.16-kV, delta-connected, 75-kV BIL
- Impedance: HX = HY = Standard

(2) Reactors

Current limiting reactors are provided to limit the short circuit duty on the circuit breakers ahead of the auxiliary transformers so that conventional breakers may be used. The reactors are oil-immersed, self-cooled (OA), air core, outdoor service. Four units are rated at 3 kA, 0.5 ohm, 26 kV, 3-phase, 60 hz, 200 kV BIL, 55°C rise, 40 kA rms symmetrical fault current. One unit is the same as above, except it is rated at 1 kA. All reactors are provided with fault pressure relay and winding temperature equipment.

(3) Oil Circuit Breakers

Oil circuit breakers are three-tank, frame-mounted, outdoor servvice, rated at 34.5 kV, 3-phase, 5-cycle interrupting, 3000 A, 200 kV BIL, 2500 MVA. Included are six condenser bushings, six multiratio relaying accuracy current transformers, a weatherproof housing with a pneumatic closing mechanism, an air compressor and a 125-V control.

(4) Outdoor Disconnecting Switches

The outdoor disconnecting switches are 3-pole, single-throw, motor-group operated, magnetizing current break. Four switches are rated at 3000 A continuous, 120 kA momentary, 200 kV BIL. One switch is rated at 1200 A continuous, 61 kA momentary, 200 kV BIL.

(5) Medium-Voltage Metal-Clad Switchgear

Switchgear for 13.8-kV Buses 1, 2, 3 and 4 are indoor, 3-phase, 15 kV, 60 hz, 750 MVA class metal-clad assemblies with 2000-A and 1200-A DC-controlled air circuit breakers, as required, complete with insulated buses, instrument transformers, instruments, instrument switches, and protective relaying. Switchgear for 13.8-kV Buses 5 through 12 are the same except they are 500 MVA class. Switchgear for 4.16-kV Buses 1 and 2 are the same as above, except they are rated at 5 kV, 350 MVA class with 3000-, 2000-, and 1200-A air circuit breakers, as required.

(6) Medium-Voltage Nonsegregated Bus

The medium-voltage nonsegregated bus is self-cooled, metal-enclosed, 3-phase, 5 kV or 15 kV, and 2000 A or 3000 A, as required, suitable for indoor and outdoor service, as applicable.

Bus dielectric test levels and momentary current ratings are not less than those of the switchgear to which the bus is connected. The bus has similar insulating supports and covering over the conductors.

(7) 480-V Load Centers

Load centers are of the indoor double-ended type and include a medium-voltage (13.8-kV or 4.16-kV) incoming line section, a transformer section, and a secondary low-voltage section, fully coordinated. The incoming line section is a cable terminal compartment only, air filled. The transformer section is the ventilated dry type for a 150°C rise and designed for future forced air cooling. The secondary section consists of power circuit breakers with adjustable solid state phase overcurrent and ground-fault tripping devices. Minimum interrupting rating is 42,000 A rms symmetrical.

(8) 480-V Motor Control Centers

The motor control centers are NEMA Class 1, Type B wiring, with a NEMA 1 enclosure for indoor application and NEMA 3R for outdoor application. Outdoor units are provided with space heaters. Combination line starters have motor-circuit protectors and overload protection in each phase. Feeder breakers have thermal magnetic trips. The minimum short circuit rating of the motor control centers is 22,000 A rms symmetrical.

20.8.5.4 DC Distribution and Uninterruptible AC Power Supply

(1) Station Batteries

Station batteries are of the lead calcium type and have the following ratings:

(a) Four 1200-ampere-hours, 125-V dc batteries for instrumentation, controls, and emergency lighting. These batteries meet the requirements of the onsite standby power systems with regard to sseismic design.

(b) Two 2400-ampere-hour, 250-V dc batteries for the computer and data logger UPS system.

(c) One 2400-ampere-hour, 250-V dc battery for the turbine-generator.

(2) Battery Chargers

Battery chargers are of the solid state type and rated as follows:

(a) Four 132-V, 300-A chargers for the batteries supplying controls, instrumentation, and emergency lighting. These chargers meet the seismic requirements of the onsite standby power systems.

(b) Three 264-V, 800-A chargers for the computer and data logger batteries.

(c) One 264-V, 800-A charger for the turbine-generator battery.

(3) Inverters

Inverters are solid state type and provide regulated ac, 120-V 1-phase or 208/120-V 3-phase output with the input supplied from one of the batteries specified above. System design includes a static switch for each inverter to automatically transfer the vital power bus to an alternate ac voltage supply in the event of inverter failure or any other malfunction that causes its output voltage to drop below an adjustable value. After a preset time delay following restoration of the inverter output voltage and frequency to their preset values, the static switch automatically retransfers the vital power bus to the inverter. A manual bypass switch is provided for maintenance purposes. The alternate ac voltage supply is regulated.

Inverters are rated as follows:

(a) Four 15-kVA, 120-V, 1-phase, 60-hz inverters for the control and instrumentation system. These units meet the seismic requirements of the onsite standby power systems.

(b) Two 100-kVA, 208/120-V, 3-phase 60-hz inverters for the computer and data logger.

20.8.6 Instrumentation and Controls

Available in a separate report upon request.

References

1. United States Nuclear Regulatory Commission, Standard Review Plan, Section 3.8.4.

2. United States Nuclear Regulatory Commission, Regulatory Guide 1.60.

3. United States Nuclear Regulatory Commission, Regulatory Guide 1.61.

4. United States Nuclear Regulatory Commission, Regulatory Guide 1.92.

5. F. G. Baily, K. C. Cotton & R. C. Spencer; Predicting the Performance of Large Steam Turbine Generators Operating with Saturated and Low Superheat Steam Conditions; Volume XXIX, Proceedings of the American Power Conference, 1967; Pages 272-279.

Table of Contents

		Page
21.1	INTRODUCTION AND SUMMARY	21-1
21.2	ISSUES OF CONCERN	21-6
21.3	METHODOLOGY OF SAFETY ANALYSIS	21-11
21.4	BARRIERS AGAINST RELEASE OF RADIOACTIVITY	21-11
21.5	TRITIUM DOSE RATES	21-17
21.6	ACCIDENT-RELATED DOSE RATES DUE TO STRUCTURAL MATERIALS	21-19
21.7	CORROSION PRODUCTS IN THE PRIMARY COOLANT LOOP	21-23
21.8	ENGINEERED SAFETY FEATURES	21-24
	21.8.1 Inerting the Reactor Building Atmosphere	21-24
	21.8.2 Emergency Plasma Shutdown System	21-27
	21.8.3 Reactor Building Overpressurization Following A LOCA	21-28
21.9	LICENSING CONSIDERATIONS	21-28
21.10	ENVIRONMENTAL IMPACTS	21-29

List of Figures

Number		Page
21-1	Barriers against release of tritium from the tritium breeding blanket	21-13
21-2	Barriers against release of tritium from the vacuum chamber	21-14
21-3	Barriers against release of tritium from the reactor chamber	21-14
21-4	Barriers against release of activated coolant corrosion products	21-15
21-5	Barriers against release of activated structural material	21-15
21-6	Barriers against release of primary coolant activity	21-16
21-7	Barriers against release of tritium from the tritium facility	21-16
21-8	Barriers against release of tritium from the storage vault	21-17
21-9	Effect of structural materials on induced radioactivity	21-21
21-10	Comparison of candidate structural materials on the relative external dose from plume versus distance	21-22
21-11	Atmospheric activation inside the reactor building	21-26

List of Tables

Number		Page
21-1	Fusion Reactor Accident Initiating Event Classification	21-4
21-2	Inductive Energy Stored in STARFIRE Magnet Systems	21-10
21-3	Structural Material Specifications	21-20
21-4	Safety-Related Decisions or Conclusions	21-25
21-5	Potential Environmental Impacts of STARFIRE	21-30

21.1 INTRODUCTION AND SUMMARY

This chapter presents a preliminary study of the safety and environmental aspects of STARFIRE. The objective of this preliminary study is to establish a framework for identifying and cataloging the safety issues pertaining to STARFIRE, to assist with design trade-offs and to ensure that safety considerations are incorporated in the design as early as practicable. While a detailed safety analysis is beyond the scope of this study, safety considerations have played a major role in deciding key material and design choices for STARFIRE.

Fusion power will have several significant safety advantages compared to current methods of generating electricity. The nuclear safety aspects are decidedly improved when compared to fission reactors: the problems of accidental criticality and of prompt criticality are not applicable; the prospects and consequences of a loss-of-coolant accident are considerably less; and the biological hazard of radioisotopes in the plant is much lower. Generally, the concerns regarding safeguarding against diversion of weapons-grade material, such as Pu or ^{235}U, are eliminated. Fusion, like fission, does not involve combustion in air, thus the routine chemical releases are much lower than for fossil power plants. The dangers due to fuel mining and other associated activities, including transportation, will be greatly reduced. Radioactive waste storage requirements will be less complicated due to the absence of fission products and actinides. Radiation doses to the general public due to routine or accidental releases of radioactivity will also be reduced.

Most recent safety evaluations of light water reactors (LWRs) and fast breeder reactors (FBRs) have concluded that, for an adequate analysis to be conducted of public risk associated with the different concepts, the total fuel cycle must be examined. In this regard, utilizing D-T for fuel in fusion reactors should make them preferable to LWRs or FBRs. The deuterium and lithium involved are not radioactive. Only the initial, start-up requirements of tritium, which is approximately 10 kg, need to be shipped to the plant. The rest of the tritium fuel cycle is contained within the plant.

The incorporation of safety into design even at the conceptual stage is done to ensure that the environmental and safety advantages inherent in fusion are fully realized. The emphasis on safety must include the concern for the safety of the general public, the plant personnel, and the plant itself -- in that order.

The U.S. Department of Energy has established the Fusion Reactor Safety Research Program and has assigned the Idaho National Engineering Laboratory (INEL) as the lead laboratory for magnetic fusion safety research. The STARFIRE project team has interacted with INEL personnel involved in the Safety Research Program concerning the safety-related aspects of the STARFIRE design.

The primary emphasis in this safety study is on deterministic methods rather than on probabilistic methods. It was not possible to do a quantified probabilistic risk assessment, due to lack of sufficient design detail definition, statistical operating data, and physical models pertaining to hazard rates. Future efforts undoubtedly will be directed at performing a detailed probabilistic risk assessment. The events that lead to potential accidents or catastrophic failures of the reactor and its systems are probabilistic in nature, and therefore it is natural to seek a probabilistic assessment of their consequences. A deterministic assessment, however, yields a range of information through parametric study by considering upper bound conditions.

The first step in a safety analysis methodology generally is a preliminary hazards analysis (PHA), a broad study performed at the conceptual stage of the system design. Its primary objectives are to identify hazardous conditions inherent in the systems and to determine the effect of potential accidents. In the context of PHA, the following sources of hazards were identified in Sec. 21.2 for the STARFIRE design:

- Tritium inventory
- Induced activity in the first wall, blanket, magnet, shield and structural materials
- Pressurized water primary coolant
- Corrosion products in the primary coolant
- Stored energy in the superconducting magnet system

- Cryogenics
- Kinetic and mangetic energy associated with the plasma current
- rf heating

The following potential accidents were identified for STARFIRE in Sec. 21.2:

- Tritium release, both in a continuous and a pulsed mode
- Release of activated structural material
- Loss of flow to the first wall or to the blanket
- Loss of coolant to the first wall and/or blanket
- Loss of cryogenic liquid helium
- Failure of first wall due to plasma disruption
- Hydrogen detonations or explosions
- rf heating system failures
- Stored energy in the magnets

The range of important fusion reactor accident initiating events, including those due to the reactor itself, due to plant operation and due to external causes are shown in Table 21-1.

In summarizing the results of this safety assessment, it is important to note that no runaway-type accidents which would affect the public or the plant personnel have been identified. While no method of generating electricity is capable of completely eliminating environmental impact and risk to society, the application of fusion will reduce the adverse effects and potential impacts to very low levels.

The STARFIRE design effort to reduce tritium-related problems involved attempting to minimize the tritium inventory, and using triple barriers wherever practical. Materials were selected in order to minimize long-term radioactivity in all components outside the blanket; those components represent over 90% of the total reactor mass. Two independent primary coolout loops have been incorporated to significantly reduce the likelihood of either complete loss-of-flow or loss-of-coolant accidents. Mechanisms and redundancy to prevent cryogenic failures and magnet accidents have been employed. Various plasma shutdown modes have been developed to prevent plasma disruptions from damaging the first wall. The rf heating system is designed such

Table 21-1. Fusion Reactor Accident Initiating Event Classification

Fusion Reactor

1. Plasma events: power excursions, disruptions
2. Plasma heating device events
3. Magnet disruptions
4. Vacuum/cryogenic system failures
5. Cooling system failures
6. Tritium system failures; breeding, fueling, processing, storing
7. Mechanical failures: vessels, pipes, pumps, valves, etc.
8. Fires/explosions/missile generation

Plant Operation

1. Duty cycle events
2. Faulted events
3. Instrumentation and control system failure events
4. Maintenance and repair events
5. Human errors

External Causes

1. Loss of off-site power
2. Earthquakes
3. Tornados
4. Floods
5. Conflagrations (fires), detonations (explosions, missiles)
6. Sabotage

that it will not pose any problems due to rf leakage or high voltages or x-rays.

The methodology applied in this safety evaluation was based upon the deterministic approach. The barriers which protect against the accidental release of radioactivity to the environment are identified.

Although radioactivity is induced in the structural materials of the STARFIRE reactor, only the radioactive coolant corrosion products are considered to be vulnerable to release into the reactor building in the case of certain accidents.

Tritium dose rates have been calculated (Appendix F) for both routine and accidental tritium releases for both the public and plant personnel. The maximum dose to an individual is 0.41 mrem/yr for routine releases of 5000 Ci/yr, when the releases are up to 100 m stack. However, this routine release is expected to go through the cooling towers, which results in a smaller dose for the individual. This can be compared with a typical dose of $\sim$ 100 mrem/yr due to natural background radiation. The maximum acute inhalation and skin absorption dose to the public, 150 mrem from an accidental release of 10 g of tritium, occurs at about 450 m from the stack. Workers unprotected by an anti-contamination suit could work in the reactor building or tritium facility and their tritium dose would be $\sim$ 1 mrem/hr with all shields in place. The reactor building maintenance, however, is designed to be fully remote. The long-term effects of potential tritium releases are studied and found to be minor. The risks from tritium releases on a global scale, in transportation accidents, and from solid waste disposal are each evaluated and found to be insignificant.

Several candidate first wall/structural materials were considered and the induced radioactivities calculated. The atmospheric dispersion of the materials in the form of corrosion products mobilized by a hypothetical reactor accident was examined. The doses for the candidate materials were found to be similar and more than two orders of magnitude lower than current accidental release dose guidelines.

The nature of the corrosion products in the STARFIRE primary coolant loop was studied in detail (Appendix G). The optimum operation conditions are similar to those from pressurized water reactors. The radioactivity of corrosion products which would be released according to the upper bound estimate corresponds to $\leq$ 0.001% of the total blanket radioactivity inventory. The accident-related dose rates due to activation products are based on this information.

A number of engineered safety features resulted from safety-related decisions as the design progressed. These included inerting the reactor building, developing multiple emergency plasma shutdown methods, providing for containment of the anticipated reactor building overpressure following a loss-of-coolant accident, and incorporating a 100 m stack through which any accidental and most routine releases would be directed.

A preliminary review of the anticipated licensing process for fusion power reactors was made, and several licensing considerations are identified.

Since fusion power is still in such an early stage of development, the ultimate regulatory requirements are difficult to predict.

The key environmental issues are also identified, and although this study did not involve the preparation of a detailed environmental impact assessment, environmental issues played a role in the design choices for STARFIRE. The materials requirements (for only the reactor portion) of 100 reactors based on the STARFIRE design are determined in Appendix C, and compared to U.S. and world reserves and resources of elements. Tantalum and tungsten in particular are predicted to be potential resource problems; however, these are optional materials for the limiter and inner shield, respectively, and can be replaced by other materials.

The rest of this chapter addresses the specific issues of concern and how they were solved or resolved in Sec. 21.2. The methodology of safety analyses is briefly described in Sec. 21.3. The barriers against the release of radioactivity are described in Sec. 21.4. Tritium dose rates are shown in Sec. 21.5 and in more detail in Appendix F. The accident-related dose rates due to structural materials are presented in Sec. 21.6 and the effects of corrosion products in the primary coolant loop is given in Sec. 21.7 and Appendix G. The engineered safety features of the STARFIRE design are described in Sec. 21.8. Some of the licensing considerations related to fusion power are given in Sec. 21.9 and the environmental impacts are listed in Sec. 21.10.

21.2 ISSUES OF CONCERN

Tritium -- On the average, the steady-state tritium inventory in STARFIRE will be about 2.8×10^4 Ci/MWth, or 11.6 kg for 4000 MWth. Of this amount, $\sim$ 10 Ci/day will accumulate in the primary cooling water. Details about the tritium in the coolant are given in Sec. 14.4. Being an isotope of hydrogen, tritium has a high permeability in materials, especially at high temperature, and is therefore difficult to contain. If the design is inadequate, tritium will permeate through walls from one region of the system to another, and could reach the environment by many different paths. Thus, there exists a potential for continuous release of tritium both as tritium gas (T_2) and tritiated water (HTO and T_2O). Large pulse releases of tritium are also possible as a result of system failure, accidents, and fires.

The STARFIRE design effort to reduce the problems associated with tritium involved attempting to minimize the tritium inventory in the vacuum pumps and fueling systems, and using triple barriers wherever practical. The use of a limiter/vacuum system greatly reduces the tritium throughput, and hence, inventory of the fuel handling system. In addition, the use of parallel, redundant systems has reduced the maximum tritium accidental release in one event to 10 g.

Induced Activity -- In addition to the radioactivity of tritium, there will be induced radioactivity in the first wall, blanket and shield materials. This activity is much less mobile than that of tritium. No mechanism which would cause melting of the structural material has been identified as being credible. Since there is a massive (1.1 m thick) bulk shield around the blanket, the likelihood of this activity becoming mobile in the event of a major loss-of-flow accident, even without plasma shutdown, is not considered to be credible. Nevertheless, some of this induced activity in the form of corrosion products imposes constraints on access for maintenance and repair activities on the reactor internals, and therefore it has a strong influence on the design of the reactor and the choice of structural materials. This radioactivity, though not present at the beginning of reactor operation, will increase with time and reach a level significant for access considerations after only a few days of operation. However, the associated afterheat is small, only about 2.2% of operating thermal power at the beginning of shutdown, and drops to about 0.03% after about a year. These values of afterheat are less than those of a pressurized water reactor of comparable size, and are distributed through a much larger volume, thus easing the problem of ensuring adequate cooling in the case of emergency shutdowns.

For STARFIRE, special effort was given to the selection of materials in order to minimize both long-term radioactivity in all components outside the blanket, and to minimize rad-waste storage. The reactor is also designed to be accessible within 24 h after shutdown, even though completely remote operations are planned for all maintenance.

Pressurized Water Coolant -- Pressurized ($\sim$ 2200 psig) water is used as primary coolant. The minimum subcooling is that which exists at the outlet

of the first wall and amounts to $\sim$ 30°C. In the event of sudden loss of pressure, due either to a pipe break or due to failure of the primary coolant pumps, the coolant will flash into steam. This steam, if allowed to escape into the plenum region, will raise the temperature and pressure in the vacuum boundary. Such an environment in the vacuum vessel could act as a cause for a common-mode failure. (Common-mode failures are those in which some single event prevents multiple and identical components from performing in accordance with design.)

Loss-of-Flow-Accident -- The pressurized water coolant for removal of heat in the first wall and blanket is subcooled to a minimum of 30°C. In the event of a loss-of-flow accident such as a loss of pumping power or a loss of pressurization, if the plasma is not shut down the coolant will go into nucleate boiling and subsequently to film boiling and will burn out. Although the first wall and the blanket have a large thermal inertia, if the plasma is not shut down within a short time of occurrence of loss of flow, ablation of the first wall beryllium coating will occur and will extinguish the plasma. The decay heat is not sufficient to cause melting in the STARFIRE design. The two independent primary coolant loops have been incorporated in the STARFIRE design in order to significantly reduce the likelihood of either complete loss-of-flow or loss-of-coolant accidents.

Loss-of-Coolant Accident -- A condition which is even more critical than a loss-of-flow accident is a loss-of-coolant accident. Such an event could result from a pipe break, an inadvertent valve closure, or a coolant tube blockage. If the loss of coolant were due to a break in the first wall panels, the coolant would interfere with the plasma and extinguish it. If the break were internal to the blanket, adequate detection would be needed to discern from which of the two cooling loops the leak was occurring, and the plasma would have to be extinguished as quickly as possible. The blanket module walls are not designed to withstand primary coolant system pressure, so adequate relief valves must be incorporated into the vacuum plenum boundary. The leakage must be detectable; such a break could possibly cause tritium to escape into the reactor building and possibly into the environment in the event of a common-mode failure of the reactor building. The hypothetical break could also occur outside of the reactor in the headers, piping,

and valves of the primary coolant system, and even in the tubes in the steam generator. In the event such an accident occurs within the reactor, the reactor would have to be repaired before it could be put back into operation.

Cryogenic Liquid Helium -- Liquid helium will be used for maintaining cryogenic temperatures of the superconducting TF, OH and EF coils, and also in the cryopumps. In the event of coil break or helium pipe break, the liquid helium will be spilled into the reactor building, which will be maintained at slightly negative differential pressure. Upon exposure of liquid helium, it will flash into a two-phase vaporliquid mixture. The presence of helium will extract the heat from reactor structures and cause thermal strains in structures and in the pressurized water coolant piping. Although the volume of the reactor building is large, a certain degree of pressurization will result from the production of helium vapor and the design must ensure that this does not exceed the design pressure of the reactor building. Thus, spilling of liquid helium into the reactor building represents a potential cause for common-mode failure of the reactor. Furthermore, if the superconducting coils are in operation, the loss of helium will drive the conductor(s) normal and possibly lead to melting of coils, which in turn could aggravate the effects of the helium spill.

Mechanisms and redundancy to prevent cryogenic failures and magnet accidents have been employed in the STARFIRE design.

Plasma Disruption Onto the First Wall -- When the plasma comes into sudden contact with the first wall, the plasma will deposit its kinetic energy ($\sim$ 900 MJ) on a part of the wall. Such a deposition of energy at a very rapid rate could cause ablation of the wall coating material in a very short time (milliseconds) over a thickness on the order of the penetration length of hot ions.

Various plasma shutdown modes have been developed to prevent plasma disruptions (see Sec. 21.8.2). The principal problem would be cleanup of the water and corrosion products, even if a first wall were to fail.

Hydrogen Detonations or Explosions -- Deuterium and tritium as isotopes of hydrogen are susceptible to combustion and detonation. The typical range

of concentrations for which hydrogen is flammable in air are from 4 vol % (volume percent) up to 75 vol %; hydrogen detonates in air at values from 18 to 50 vol %.[1] Thus, deuterium and tritium gas handling systems have to be designed to prevent air in-leakage or gas out-leakage that would result in hazardous concentrations. In order to reach the explosive limit in a large capacity reactor building, large quantities of hydrogen isotopes would have to be released. However, small pockets of an explosive mixture could be formed in a confined volume immediately adjacent to a D_2 or T_2 leak. Hydrogen explosions represent a potential, but low probability, cause for common-mode failure of STARFIRE.

RF Heating -- A preliminary assessment has been made of the biological hazard due to the rf heating system. There should be no rf leakage unless there is a crack in the rf plumbing. The effect of such a crack would be readily detectable from changed system behavior. The permissible exposure to rf waves is 10 mW/cm^2. In addition, rf generation requires high voltages, which produce x-rays and also presents the usual hazards associated with high voltages.

Stored Energy in the Magnets -- The amount of inductive energy stored in the various magnet systems is quite large. The values which have been calculated are shown in Table 21-2. (Refer to Chap. 9 for more details about the magnets, including the safety ramifications.)

Table 21-2. Inductive Energy Stored in STARFIRE Magnet Systems

System	Energy Stored (GJ)
TF Coils	50
OH Coils	1.1
EF Coils	10.4
Combined, EF Coils and Plasma Current	10.0

21.3 METHODOLOGY OF SAFETY ANALYSES

The safety evaluation of the STARFIRE design draws upon experience from other technologies, such as the fission reactor industry, and upon earlier assessments of conceptual fusion reactor designs.[2,3,4,5] At the present time there are basically two methods of analysis employed in the safety evaluation of fission reactors, the deterministic method and the probabilistic risk assessment method. These are not really two distinct methodologies, but rather they are complementary techniques for conducting a safety analysis. Since only the deterministic method was utilized in the STARFIRE study, it will be described in more detail.

Historically, the deterministic method of safety analysis was employed first in the licensing of fission power reactors and it can be thought of as the conventional method. In the deterministic method of safety analysis, the reactor plant is first studied to identify what conditions can lead to accidents that can cause harm to the public. The worst set of accidents is then selected for detailed analysis. Analytical models are devised to represent the accident situations. Conservative assumptions are used wherever precise information is unavailable and whenever there is an option for the accident sequence to branch in several directions. Therefore, the results of the analyses tend to be upper bound estimates. Attempts are sometimes made to determine the range of uncertainty and to thereby evaluate the degree of conservatism in the analytical results.

The advantage of the deterministic method of safety analysis is that it provides an evaluation of the worst situations. It has been successful in the fission reactor industry in helping to establish a very good safety record. The disadvantage is that the method has become somewhat formalized in the selection and treatment of potential accidents and, therefore, does not consider the wide range of possible accident cases of relatively low consequence, but of relatively high probability.

21.4 BARRIERS AGAINST RELEASE OF RADIOACTIVITY

The primary sources of radioactivity in the STARFIRE reactor design having been identified, the next step in the safety assessment methodology is to identify the barriers which protect against the accidental release of radioactivity to the environment.

Tritium, because of its biological hazard potential and its mobility, should be handled in systems designed to provide multi-barrier protection. The greatest inventory of tritium will be contained in the storage vault, for which there are several barriers to the release of tritium to the atmosphere. The reactor building, including the liner, is a barrier to the release of tritium as a result of rupture of any of the pipes, or of the main vacuum boundary (bulk shield). Details of the tritium handling systems for STARFIRE are given in Chap. 14.

For this portion of the report, the total tritium inventory has been assumed to be divided into five parts:

(1) the tritium inventory in the fuel systems connected to the fusion reactor and contained within the plasma chamber;
(2) the tritium inventory associated with the vacuum pump system and located in the vacuum pump chamber which is separated from the plasma chamber;
(3) the tritium contained in the tritium breeding blanket;
(4) the tritium in the tritium facility; and
(5) the tritium in the storage vault which is contained in an isolated cell in the tritium facility.

These five parts of the tritium system are assumed to be connected by pipes containing automatic, fast-acting isolation valves, actuated by a tritium leak detection system. All tritium processing pipes and components are designed with at least double containment walls. The tritium inventory is housed within the reactor building, the tritium facility, and the hot cell, all of which have leak-resistant liners.

Figures 21-1 through 21-8 illustrate the potential barriers for accidental release of radioactivity to the environment. They demonstrate the multiple barriers provided in STARFIRE to protect the public from radioactivity. These barriers are discussed in the following paragraphs. Each of the two primary coolant loops is contained entirely within the reactor building. Thus, any leaks from the loops are into the building and not directly to the environment.

Figure 21-1 shows the barriers to tritium release from the tritium breeding blanket. Breaching of these barriers can be accomplished either by tritium permeation, or by rupture of either the primary coolant tubing or purge system tubing. Continuous (on-line) tritium processing will be used in the STARFIRE design, rather than batch processing. In continuous tritium processing schemes, purge system tubing failures coupled with failures of isolation valves could lead to tritium release into the reactor building or tritium facility.

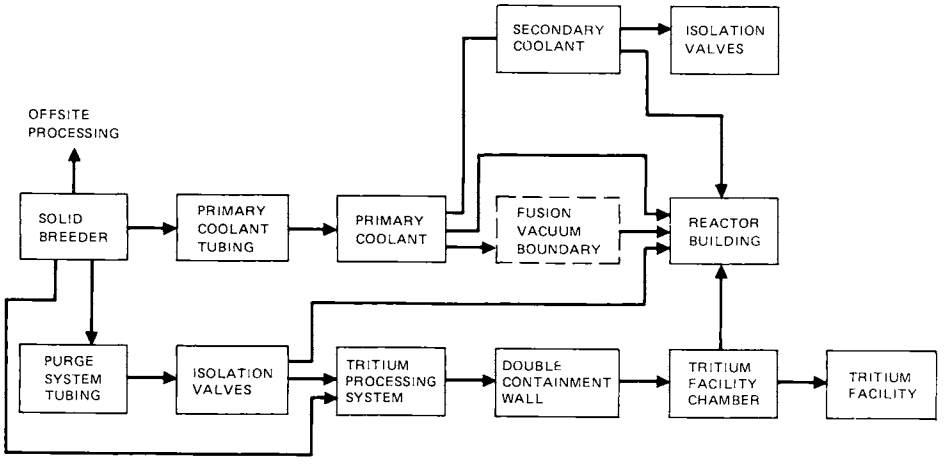

Figure 21-1. Barriers against release of tritium from the tritium breeding blanket.

Figures 21-2 and 21-3 show the tritium release barriers for the vacuum chamber and the plasma chamber, respectively. Tritium will be released to the vacuum pump chamber if a rupture occurs in the vacuum pump itself, as indicated in Fig. 21-2. To release tritium to the vacuum chamber would require a rupture of both walls of the double-wall piping. Isolation valves from both the plasma chamber and tritium processing system would have to close to preclude further tritium release into the vacuum pump chamber. The vacuum pump chamber is designed to contain a tritium spill.

Figure 21-3 indicates that tritium can be released to the reactor building upon rupture of any of the fusion reactor component boundaries (e.g., vacuum chamber, tritium piping), or of the fusion reactor component boundary plus the portion of the primary coolant boundary which is within the reactor.

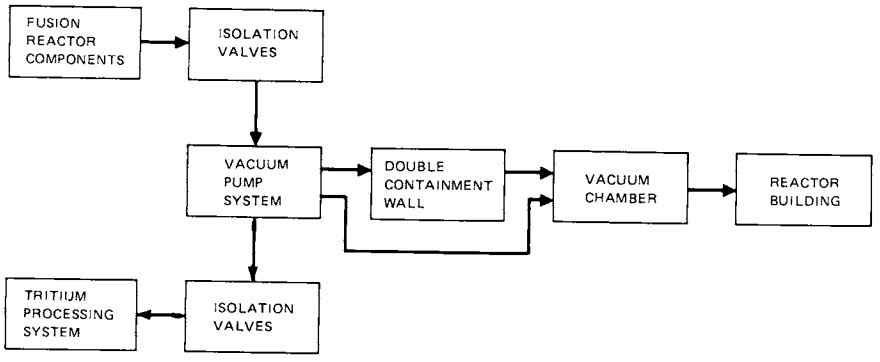

Figure 21-2. Barriers against release of tritium from the vacuum chamber.

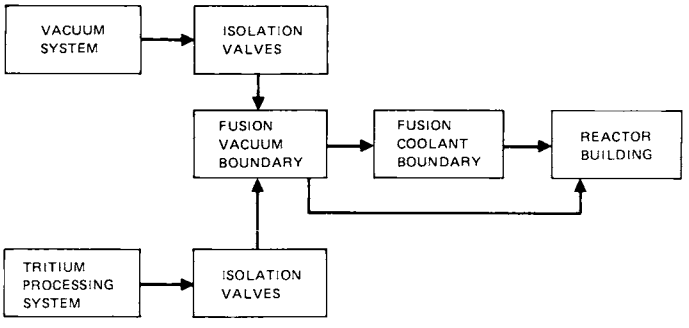

Figure 21-3. Barriers against release of tritium from the reactor chamber.

The radioactivity which is induced in coolant corrosion products is relatively mobile. Section 21.7 and Appendix G describe the impact of corrosion products. Figure 21-4 illustrates the barriers to the release of potential coolant corrosion products.

Radioactivity is induced over a period of time in the structural materials of the STARFIRE reactor. Even if an accidental energy release occurs which melts or vaporizes some of the structural material (an eventuality which does not appear to be possible), there are several barriers to the activity that must be penetrated before it can reach the environment. Figure 21-5 shows several possibilities. One possible scenario involves vaporization of some of the beryllium coating on the first wall by a plasma disruption, in which case the resultant activity is contained by the fusion vacuum boundary, which is also the bulk shield. The primary coolant boundary is

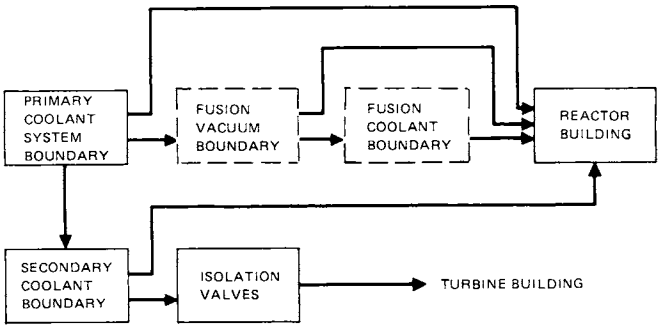

Figure 21-4. Barriers against release of activated coolant corrosion products.

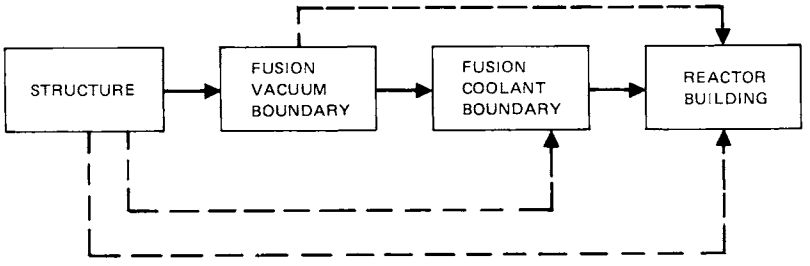

Figure 21-5. Barriers against release of activated structural material.

also a potential release path. If either of these are breached, then the reactor building still provides retention. Another possibility is the case shown as a dashed line, in which the primary coolant boundary is not a barrier. Such could be the case if an energy release vaporized some part of the non-cooled vacuum boundary.

The accidental release of radioactivity induced in the coolant is shown in Fig. 21-6. Generally this is not considered to be a problem with water coolant because the isotopes formed have such short half-lives, e.g. ^{16}N (7.2 s), ^{17}N (4.2 s), ^{19}O (29.0 s).

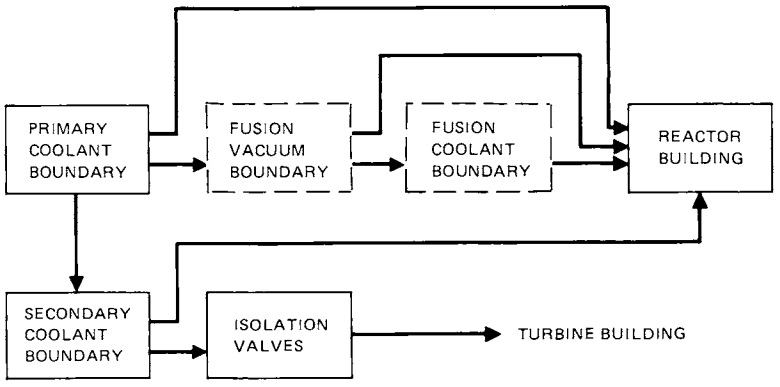

Figure 21-6. Barriers against release of primary coolant activity.

The release of tritium from the tritium facility (Fig. 21-7) is similar to a release from the vacuum pump chamber with two exceptions. First, there are expected to be many more components and pipes in the tritium facility which can fail as compared to the vacuum system. Since the tritium facility is not fully automated, the influence of human error should be evaluated. The second exception is that the tritium breeding and recovery system will be connected to the tritium facility via an isolation valve.

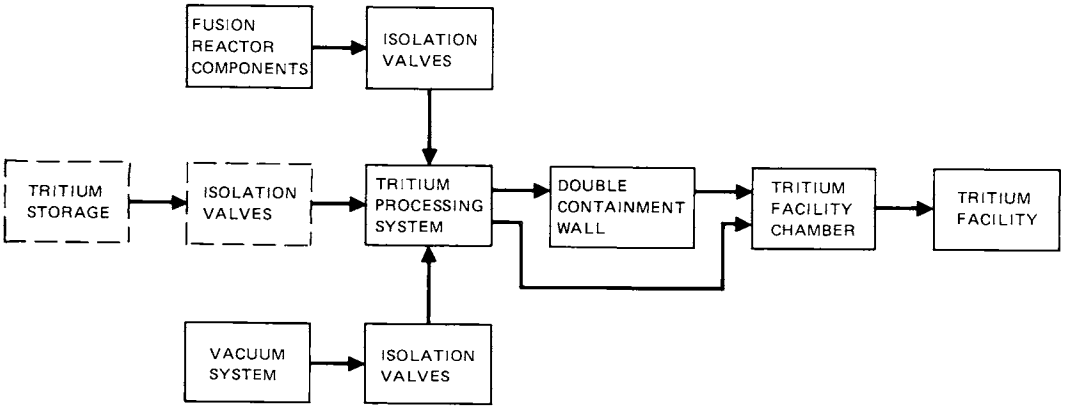

Figure 21-7. Barriers against release of tritium from the tritium facility.

The public is protected from the release of tritium from the storage vault by one additional barrier as compared to the cases of the vacuum pump chamber and tritium facility (Fig. 21-8). That barrier can be considered to be provided by the containment of tritium as a chemical compound, from which the release of tritium requires a chemical reaction. This barrier is accomplished by storing tritium as a metal titride, and the vault in which it is stored is an additional barrier.

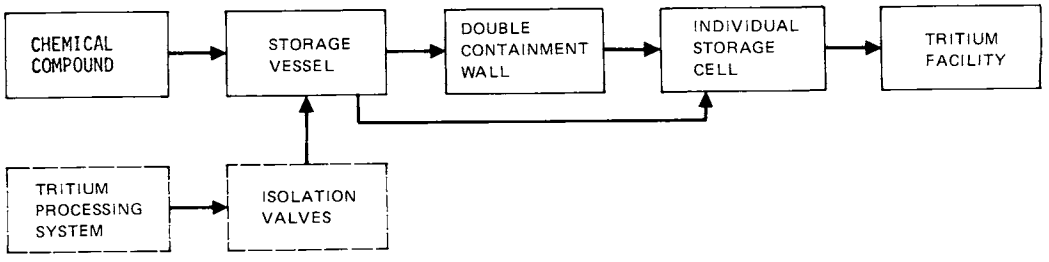

Figure 21-8. Barriers against release of tritium from the storage vault.

Thus, numerous barriers exist for each of the systems in which tritium is handled in order to contain the tritium.

The radioactivity induced in structural components is not expected to be of concern in terms of public safety, except in the highly unlikely event that the structure is vaporized due to a very large energy release. Such a release mechanism has not been identified and is judged to be an incredible event

21.5 TRITIUM DOSE RATES

The details regarding the calculation of tritium dose levels for STARFIRE are presented in Appendix F. The tritium handling design goals are described there and in Sec. 14.5.

Chronic exposures to the public are calculated on the assumption the intake is by inhalation and by absorption through the skin. The maximum dose is 0.41 mrem/yr for routine releases of 5000 Ci/yr, when the releases are up

a 100 m stack. However, since this routine emission is expected to occur through the cooling towers, the maximum dose will be much less. Acute exposures to the public due to an accidental release of up to 10^5 Ci (10 g) of tritium were also determined. The maximum acute dose of 150 mrem occurs at about 450 m from the stack. No building wake effects were considered. It must be noted that no credit was taken for containment of the released tritium by the reactor building. Thus, the release of 10 g outside the reactor building is a very conservative number.

The jet effect and the effective stack height were also determined. The plume rise was calculated and found not to be significant. Therefore, the actual 100-m height was used. A comparison of the effects of exposure to tritium gas and to tritium oxide (HTO or T_2O) was made. In general, the hazards due to the gas are far less, so all of the tritium is assumed to be oxidized in order to be conservative. Various mitigating factors were suggested by which the doses could be reduced.

Tritium exposures to plant personnel are also calculated in Appendix F. Any persons going into either the reactor building or the tritium facility are anticipated to be in anti-contamination suits. Even in an atmosphere in which there was a maximum permissible concentration of tritium for workers (5 $\mu Ci/m^3$), the dose rate to a worker without an anti-contamination suit would only be 1.29 mrem/hr. In case of an accidental release of 10 g of tritium while an unprotected worker was in the reactor building, the acute dose rate would be 97 rem/hr. A similar release in the smaller tritium building would be much higher (1290 rem/hr).

The long-term effects of tritium releases on the public are also evaluated in Appendix F. Ingestion of contaminated food or drinking water in which tritium is taken up directly or through food chain transfer is considered and found to be minor when compared to inhalation or skin absorption.

An estimate of the world-wide population dose due to tritium releases to the environment for 100 STARFIRE-type reactors each releasing 12 Ci of tritium per day was studied. The world dose is predicted to be from 1.05 to 1.53 man-rem/yr (which agrees with other studies).

The risks from tritium releases in transportation accidents and from tritiated solid waste disposal were assessed and were found to be not significant.

21.6 ACCIDENT-RELATED DOSE RATES DUE TO STRUCTURAL MATERIALS

The induced radioactivities in the first wall and the structural materials in the breeder blanket and shield are major sources of radioactivities in commercial fusion power plants and could produce an important contribution to the dose rate if they were capable of being released in an accident. However, no mechanisms were found which could mobilize the radioactive structural materials in the first-wall/blanket other than corrosion/erosion of the coolant passages. (The analysis of that effect is described in the following section.) Also, no mechanism for volatilizing corrosion/errosion products was found.

Several candidate materials have been considered, including: PCA (primary candidate alloy), which is comparable to Type 316 stainless steel; a ferritic stainless steel (FS-CE); and Ti-4381 (Ti-4Al-2.5V-8Sn-0.5 Si) and V-15Cr-5Ti alloys. One of the main contributions of this portion of the safety study relates to the use of real world alloy compositions, including typical impurities, and the use of appropriate neutron fluxes and energy spectra for a detailed first wall/breeder blanket design. The compositions used in the calculations are given in Table 21-3.

The specific activities (Ci/MWth) of these alloys have been calculated for several design conditions both during reactor operation (from 1 s to 2 yr) and following reactor shutdown (from time zero to 1000 yr). The computation for the radioactivity-related parameters, such as biological hazard potential (BHP) and decay β/γ spectrum, has been performed by using the RACC[6] code in conjunction with the RACCDLIB/RACCXLIB[7] data libraries. (See Chap. 12 for more information on those calculations.)

The effect of different structural materials on the induced activity is shown in Fig. 21-9 over the time period for zero to 30 days after shutdown. The activation levels associated with the candidate structural materials at times immediately after shutdown are ordered as follows: 316 SS > FS-CE > Ti-4381. Due to the presence of ^{55}Fe (half life = 2.7 yr) in stainless steel and FS-CE, the activation levels in these structural materials remain almost constant over the first month after shutdown. In the case of Ti-4381, the activation decay is very slow until the most dominant radioisotopes of ^{47}Sc (3.4 day) and ^{48}Sc (44 h) diminish.

Table 21-3. Structural Material Composition

Element	PCA Stainless Steel		Type 304 Stainless Steel		Fe14Mn2Ni2Cr		Ti6Al4V	
	wt-%	atom/b-cm	wt-%	atom/b-cm	wt-%	atom/b-cm	wt-%	atom/b-cm
B	0.005	2.188(-5)						
C	0.05	1.971(-4)	0.046	1.813(-4)	0.58	2.309(-3)	0.01	2.267(-5)
N	0.01	3.380(-5)	0.038	1.284(-4)	0.019	6.487(-5)	0.008	1.555(-5)
O							0.065	1.106(-4)
Al	0.03	5.264(-5)					6.0	6.056(-3)
Si	0.5	8.427(-4)	0.47	7.921(-4)	0.23	3.916(-4)	0.01	9.695(-6)
P	0.01	1.528(-5)	0.026	3.974(-5)	0.015	2.316(-5)		
S	0.005	7.382(-6)	0.012	1.772(-5)	0.002	2.983(-6)		
Ti	0.30	2.965(-4)	0.03	2.965(-5)			89.84	5.108(-2)
V	0.10	9.292(-5)					4.0	2.138(-3)
Cr	14.0	1.274(-2)	17.7	1.611(-2)	2.01	1.848(-3)	0.01	5.236(-6)
Mn	2.0	1.723(-3)	1.17	1.008(-3)	14.0	1.219(-2)	0.0025	1.239(-6)
Fe	64.88	5.499(-2)	70.578	5.982(-2)	81.20	6.953(-2)	0.02	9.752(-6)
Co	0.03	2.410(-5)	0.10	8.032(-5)				
Ni	16.0	1.290(-2)	9.3	7.499(-3)	1.94	1.580(-3)	0.005	2.319(-6)
Cu	0.02	1.490(-5)	0.20	1.490(-4)			0.01	4.286(-6)
As	0.02	1.264(-5)						
Nb	0.03	1.529(-5)						
Mo	2.0	9.868(-4)	0.33	1.628(-4)			0.005	1.419(-6)
Sn							0.01	2.294(-6)
Ta	0.01	5.453(-10)						
Density (g/cc)	7.86		7.86		7.94		4.52	

Element	Type 316 Stainless Steel		Type CE Ferritic Stainless Steel		V15Cr5Ti		Ti4Al2.5V8Sn0.5Si (Ti-4381	
	wt-%	atom/b-cm	wt-%	atom/b-cm	wt-%	atom/b-cm	wt-%	atom/b-cm
C	0.058	2.286(-4)	0.080	3.089(-4)	0.02	6.118(-5)	0.01	2.267(-5)
N	0.007	2.366(-5)			0.05	1.311(-4)	0.008	1.555(-5)
O					0.05	1.148(-4)	0.065	1.106(-4)
Al					0.004	5.447(-6)	4.0	4.038(-3)
Si	0.460	7.752(-4)			0.03	3.924(-5)	0.5	4.848(-4)
P	0.026	3.974(-5)			0.01	1.186(-5)		
S	0.011	1.624(-5)						
Ti	0.040	3.953(-5)			5.00	2.835(-3)	84.9	4.825(-2)
V			0.150	1.365(-4)	79.794	5.754(-2)	2.5	1.336(-3)
Cr	16.70	1.520(-2)	9.000	8.025(-3)	15.00	1.060(-2)	0.01	5.236(-6)
Mn	1.430	1.232(-3)					0.0025	1.239(-6)
Fe	64.44	5.462(-2)	89.17	7.405(-2)	0.01	6.578(-6)	0.02	9.752(-6)
Co	0.030	2.410(-5)						
Ni	13.90	1.121(-2)			0.001	6.258(-7)	0.005	2.319(-6)
Cu	0.060	4.470(-5)					0.01	4.286(-6)
Ga					0.01	5.270(-6)		
Nb			0.100	4.992(-5)	0.0025	4.996(-7)		
Mo	2.840	1.401(-3)	1.000	4.834(-4)	0.008	3.164(-6)	0.005	1.419(-6)
Sn							8.0	1.835(-3)
Ta					0.003	1.149(-6)		
W			0.500	1.261(-4)	0.0075	1.523(-7)		
Density (g/cc)	7.86		7.70		6.10		4.52	

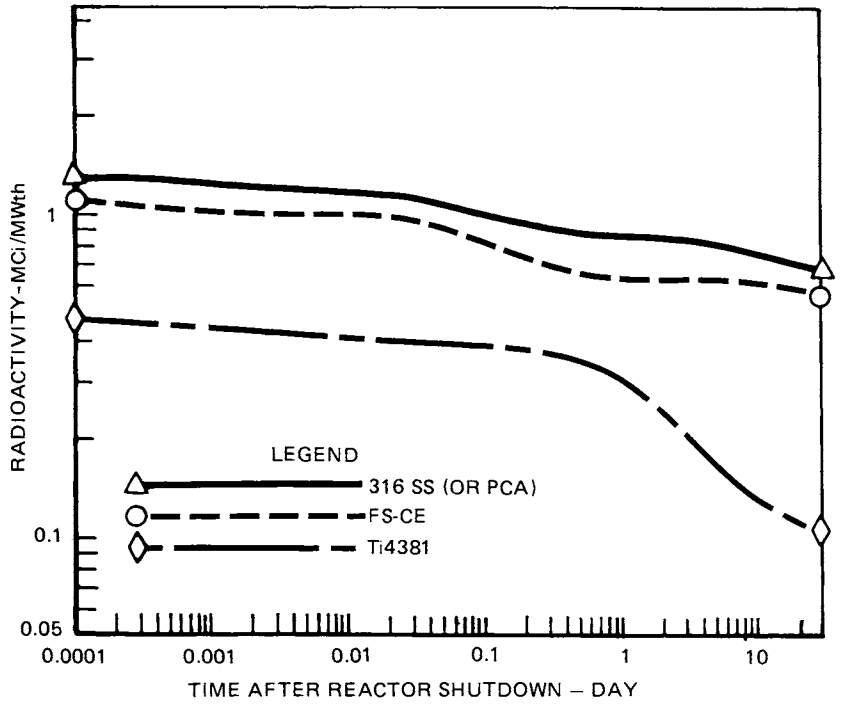

Figure 21-9. Effect of structural materials on induced radioactivity.

In addition to the effect of structural materials on reactor activation, the effects of different potential breeding materials and different coolants were investigated. The influence of breeding materials and of coolants on reactor activation was determined to be minor in comparison with that of the structural material.

The atmospheric dispersion of structural material was examined for an accident based on a short-term uniform release from a point source. This simple type of model was utilized to compare relative external doses due to the candidate alloys. The materials as corrosion products were assumed to have been partially mobilized by a hypothetical reactor accident, to leak from the reactor into the reactor building, leak out of the reactor building, and to then be dispersed in a Gaussian plume. Regulatory Guide 1.4[8] methodology and worst case conditions (such as Pasquill Type F, average wind velocity of 1 m/s, and a ground-level release) were used. Long-term, ingestion-type effects were not included.

It was assumed that, because of the nature of the reactor design and the driving forces that would be involved in accident scenarios, the release fraction of structural material into the containment would be only 0.001% of

the structural material activity based on the assumption that corrosion product release is the pathway (see Sec. 21.7 and Appendix G). The leakage rate from the reactor building is assumed to be 0.1 vol %/day for the post-accident pressurization condition.

The relative external doses due to structural material are shown in Fig. 21-10. These doses are based on extremely conservative assumptions and are for ground-level exposures at the centerline of the plume.

The NRC guideline is 20 rems whole-body dose in 2 h following an accidental release of radioactive material.[8] This guideline translates to an average value of 2.78 mrem/s which is more than two orders of magnitude higher than the highest doses shown in Fig. 21-10. This is one of the values used to establish the tentative exclusion radius at the construction permit stage; 25 rem is used for the final determination of the exclusion boundary at the operating license stage.

A comparison of the dose due to all accidental releases at one day after shutdown was compared to the reference case of one hour after shutdown. The difference was insignificant (less than 5%).

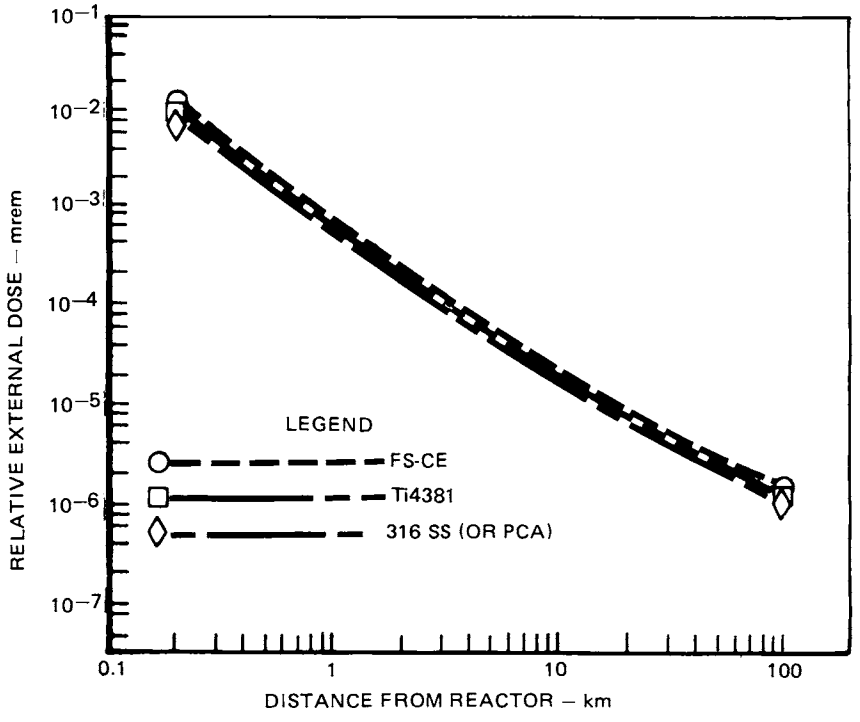

Figure 21-10. Comparison of candidate structural materials on the relative external dose from plume versus distance.

The results indicate that Type 316 stainless steel (or PCA), Ti-4381, and ferritic stainless steel (CE) yield approximately equal doses. Thus, the primary structural alloy (PCA), which is a modified Type 316 stainless steel, was adopted as the reference structural material for STARFIRE. (See Chap. 9 and Appendix E for more details regarding PCA.) The possibility of reducing the long-term activity by elemental or isotopic tailoring is discussed in Sec. 12.2.

The preceding results are based on the assumption that 0.001% of the structural material activation products in the form of corrosion products were accidentally released into the reactor building. This does not mean that those amounts are expected to be released. The exercise was done in order to compare the effect of different structural materials from this particular standpoint. Even with these conservative assumptions, the releases and calculated doses are far below current limits.

21.7 CORROSION PRODUCTS IN THE PRIMARY COOLANT LOOP

Since the corrosion products in the primary coolant loop have been identified as the most likely means by which activated structural material in the STARFIRE reactor could be released into the reactor building in the case of a hypothetical accident, the nature of the corrosion products was studied in detail. An evaluation of the importance of corrosion products in the STARFIRE primary coolant is presented in Appendix G. Included in that discussion are the appropriate water chemistry conditions, necessary control equipment, and the associated corrosion product inventory and distribution. Although the data base for water corrosion of reactor materials is generally more extensive than for any other potential fusion reactor coolant, some information is still lacking. The influence of strong magnetic fields on the corrosion process was addressed and was determined to be minor provided that proper water chemistry conditions are maintained.

The proper water chemistry operating conditions were determined to be as follows: $pH_{25°C} \sim 9.5$; $O_2 \simeq 5$ ppb; $H_2 \simeq 5$ ppm; LiOH $\simeq 0.22 - 2.2$ ppm of ^7Li; and boric acid $\simeq 0 - 1500$ ppm boron. The STARFIRE optimum conditions are similar to those for pressurized water reactors.

In Appendix G the activity levels in the coolant and tube wall deposits are determined, and the corrosion product transport is modeled. The total potentially releasable corrosion products from a loss of coolant accident (LOCA) are estimated for three different cases. The upper bound release estimate is obtained by assuming that the coolant in one of the two independent primary coolant loops, as well as the entire outer surface oxide layer, is released during a LOCA into the reactor building. The mass of corrosion products involved would be 44 kg, and the associated activity would be 32,000 Ci. This corresponds to $\leq 0.001\%$ of the total blanket radioactivity inventory. It is difficult to determine what fraction of the mobilized corrosion product material could reach the environment by leaking from the reactor building; however, deposition and settling should decrease the material by about a factor of 10. Thus, the maximum corrosion product release to the environment is probably $< 0.0001\%$ of the blanket activity inventory.

21.8 ENGINEERED SAFETY FEATURES

As the conceptual design of STARFIRE progressed, a number of decisions were made in an attempt to reduce or eliminate various safety problems. The most important of these decisions was to use a solid lithium compound as a tritium breeder, in order to gain the perceived safety advantages of solid lithium compound breeders as compared to liquid lithium. The major safety-related decisions are tabulated in Table 21-4, together with the principal reasons for the choices made. Several of the most important safety features are discussed in the following sections.

21.8.1 Inerting the Reactor Building Atmosphere

If air were used as the atmosphere in the reactor building of STARFIRE, it would become activated due to the production of ^{14}C, ^{16}N and ^{41}Ar. The ^{14}C and ^{16}N are due to (n,p) reactions with ^{14}N and ^{16}O, respectively, and the ^{41}Ar comes from radiative capture, i.e. (n,γ) reaction, with ^{40}Ar. Candidate gases for the reactor building atmosphere were helium, nitrogen and carbon dioxide. Helium was eliminated from consideration based on the mass that would be needed ($\sim$ 30 tonnes) from this resource limited material, the associated expense (which is expected to increase with time), and leakage problems.

Table 21-4. Safety-Related Decisions or Conclusions

Safety Issue	Decision	Objective(s)
Tritium	Solid Breeder ($LiAlO_2$)	- Minimize ^3T
	Fully Remote Maintenance	- Minimize Worker Exposures
	Double-Walled Piping on Helium Purge Lines	- Reduce Leak Potential
	Atmospheric Tritium Recovery (ATR) System	- Reduce ^3T in Atmospheres of Reactor Building, Hot Cell and ^3T Facility
	Tritium Cleanup System on Primary Coolant	- Reduce ^3T Permeation to Secondary Loop
	Leak-Resistant Liner on Reactor Building, Tritium Facility and Hot Cell	- Reduce ^3T Leakage
	100-m Stack	- Better Dispersion in Case of a Leak or Accidental Release
	Limiter/Vacuum System	- High Burn Fraction, Lower ^3T Requirement
Activation Products	Vacuum Duct Design	- Minimize Activation
	Limiter/Vacuum System	- Minimize Activation
	Materials Selection for Bulk Shield	- Reduce the Long-Term Activity
	Fully Remote Maintenance	- Minimize Worker Exposures
	Reactor Building Wall Thickness	- Designed for both Biological Shielding and LOCA Overpressure
	100-m Stack	- Better Dispersion in Case of an Accidental Release
	Inerting the Reactor Building with CO_2	- Minimize the Activity in Building Atmosphere
	Emergency Plasma Shutdown System	- Minimize Plasma Heating During Coolant Accident Conditions
Magnetic Fields	Series Connection of TF Coils	- Equal Currents in all TF Coils
	Coil Protection System Has Been Developed	- Dump Resistors Between Each Coil - Maximum Voltage 2.5 kV - Maximum Temperature 150 K
	Plasma Disruptions	- Currents and Forces in First Wall are Tolerable - TF Coils Do Not Quench
	TF Coil Discharge	- Maximum Induced Pressure on First Wall ∿7 psi for a Design Discharge Time of 20 Minutes - ∿130 psi for an Assumed Discharge Time of 1 Minute
	Unscheduled Poloidal Field Discharge	- Forces << TF or Plasma Disruption
	Fringing Field	- Due to Poloidal Coils is 200 G at Inner Side of Reactor Building Wall - Due to TF Coils is 10 G at Same Position
	Arcing Within a Coil Or To A Coil Case	- Proper Design and Construction Must Preclude
Stored Chemical Energy	Solid Breeder ($LiAlO_2$)	- Minimize Chemical Energy Compared to Liquid Lithium
	Water Coolant	- Minimize Chemical Energy Compared to Liquid Metals
	Dual Primary Coolant Loops	- Lower Building Overpressure Than One Loop
	Residual Heat Removal System	- To Dissipate Long-Term Residual Decay Heat - Can be Used to Provide Emergency Cooling

Calculations were made to determine the activity levels in CO_2 and N_2 compared to air. These are plotted on Fig. 21-11 as a function of time after startup and then following shutdown. As can be seen from the curves, only CO_2 decays to favorable levels after reactor shutdown. Air and N_2 both remain highly radioactive due to the presence of ^{14}C. The maximum permissible concentrations (MPCs) shown on the figure are those for the general public; the MPCs for workers are somewhat higher.

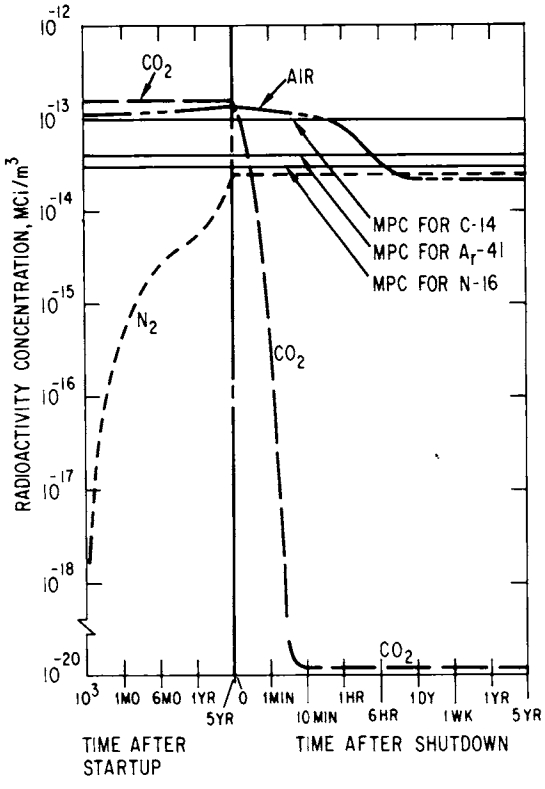

Figure 21-11. Atmospheric activation inside the reactor building.

Inerting the reactor building with CO_2 offers several advantages. The possibility of a hydrogen fire or explosion would be reduced, as would the possibility of a fire due to other combustible sources. Production of ^{14}C and ^{41}Ar would be reduced. In addition, some components would last longer, building inleakage should be easier to detect, and tritium removal from the CO_2 should not be a problem. The main disadvantages are that some components might have to be modified to operate properly, and there would be the added cost of the required CO_2 gas itself.

21.8.2 Emergency Plasma Shutdown System

A system has been incorporated into the STARFIRE design which is capable of quickly terminating the plasma. The system consists of an interruptible switch which is a variable dump resistor capable of dissipating 10 GWe, and the associated instrumentation and controls. There are safety advantages associated with STARFIRE being designed as a high Q, but slightly sub-ignition steady-state reactor (unlike an ignited ohmic machine where the pulse may continue to completion) since shutting off the rf drive to the plasma will terminate the burn. Normal shutdown of the plasma takes approximately 24 minutes and is the method used prior to scheduled maintenance.

There are basically three different emergency shutdown modes, as discussed in Sec. 6.3.2. When a small leak or some impending failure is detected, the plasma can be terminated in the "rapid" shutdown mode in three seconds without causing a plasma disruption. In the event of a major accident, such as a coolant line rupture, the plasma would be terminated in $\sim$ 100 ms using the "abrupt" shutdown mode. This "abrupt" mode involves initiating a plasma disruption whenever the urgency of certain situations is considered to warrant it. A third emergency shutdown mode is the "ablative induced" mode which occurs naturally if a hot spot forms on the first wall. The beryllium coating is ablated and causes the plasma to cool by radiation from excess impurity ions and electrons. This inherent mechanism causes the plasma to shut down in $\sim$ 0.5 s, and should preclude the possibility of melting the first wall due to plasma interaction.

21.8.3 Reactor Building Overpressurization Following a LOCA

The overpressurization of the reactor building resulting from a primary coolant LOCA was estimated on the basis of the similarities of STARFIRE coolant pressures and temperatures to those of present-day pressurized water reactors. For STARFIRE the reactor building volume is 2.55×10^5 m^3, and the coolant volume in each of two primary loops is 250 m^3. The decision to locate the steam generators in the reactor building was based on safety considerations, e.g., fewer penetrations, larger building volume. Based on the scaling of a number of LWR accident scenarios, the differential pressure on the STARFIRE reactor building walls would be $\sim$ 70 to 100 Pa (10.5 to 15 psig) depending on the location and nature of the coolant system break. Generally it is conceded that if a break occurs, especially in one of the coolant legs between the reactor and the steam generator, the entire inventory of one of the two loops will escape into the reactor building within 20 to 200 seconds. The two primary coolant loops in STARFIRE are designed to be independent.

The principal difference between the overpressurization of a LWR (typically $\sim$ 414 Pa or 60 psig) and STARFIRE relates to the larger volume of the building selected for the fusion device. The STARFIRE reactor building will also have post-accident building isolation and internal heat removal systems, similar to LWRs. One engineered safety feature which should not be needed for fusion is a building spray system which is incorporated in LWRs to remove iodine from the building atmosphere and to limit pressures following a LOCA.

21.9 LICENSING CONSIDERATIONS

Since fusion power development is still undergoing both scientific and engineering demonstration, the types of anticipated licensing considerations and the extent of imposed regulatory requirements on a tenth-of-a-kind commercial fusion power plant are subject to varied assumptions. Distinct characteristics inherent in a fusion reactor, including a lack of fission products and actinides, and an absence of the potential for runaway nuclear reactions, strongly suggest that the commercial application of fusion power may avoid a lengthy and complicated licensing process.

Several licensing considerations have been identified including the following:

1. A federal regulatory agency (or group of agencies) will be empowered to protect the safety of the public beyond site boundaries, to protect the safety of plant operating personnel, and to ensure minimum adverse environmental impact.
2. Such a federal regulatory agency will perform an in-depth review of the owner's application for aspects of site, design, construction, and operation.
3. Regulatory requirements can be expected to reflect the inherent public safety advantages of fusion. This action, in turn, should lower the plant design and construction costs, as well as reduce the overall project schedule, including licensing.
4. The future fusion application format will be a modification of the review requirements presently mandated for fission projects.
5. Presently known problems concerning such aspects as tritium, radiation damage to materials, remote maintenance, biomagnetic effects, ultimate solid radwaste disposal, and other problems yet to be detected will have been either resolved or controlled in some realistic manner. Such an assumption is fundamental to a mature fusion industry.

21.10 ENVIRONMENTAL IMPACTS

No method of producing power on a commercial scale is without some environmental impact and risk to society. However, it is felt that fusion will reduce the adverse effects and potential impacts to very low levels. The STARFIRE design should be representative of D-T fueled tokamak power plants in terms of environmental impacts.

The key environmental issues are tabulated in approximately their order of importance in Table 21-5. As usual, it is sometimes difficult to distinguish between safety issues and environmental issues. The first three issues have previously been discussed either in this chapter or in Chap. 9 through 12. The fourth, resource requirements, is addressed in Appendix C. The other issues listed were not specifically addressed in this study.

Table 21-5. Potential Environmental Impacts of STARFIRE

1. Radionuclide releases (routine and accidental)
2. Radioactive waste transportation and disposal
3. Magnetic fields
4. Depletion of natural resources
5. Land use
6. Heat releases
7. Socio-economic
8. Chemical releases
9. Liquid releases
10. Gaseous releases
11. Solid waste disposal (nonradioactive)
12. Sanitary wastes
13. Noise
14. Vibrations
15. Odors
16. Aesthetics

The Magnetic Fusion Energy Environmental Project Group at Oak Ridge National Laboratory has worked closely with the STARFIRE project team and will be performing a general environmental assessment of fusion with STARFIRE used as a reference design. The group is expected to investigate a number of these other issues as a part of that assessment.

REFERENCES

1. H. J. Willenberg, ed., Workshop Proceedings: Safety and Environmental Aspects of Deuterium - Tritium Fusion Power Plants, EPRI-ER-821-WS, Electric Power Research Institute, June 1978.
2. W. Haefele, J. P. Holdren, G. Kessler, and G. Kulcinski, "Fusion and Fast Breeder Reactors," IAEA, Vienna (Rev. July 1977).
3. W. E. Kastenberg and D. Okrent, "Some Safety Considerations for Conceptual Tokamak Fusion Power Reactors," EPRI-ER-546, (July 1978).
4. T. C. Chawla, "Preliminary Considerations of Safety and Reliability of Tokamak Experimental Power Reactor," ANL/CTR TM-73 (August 1976).
5. General Atomic Company, Hybrid Reactor Safety Study: Annual Report, GA-A15578 (December 1979).
6. J. Jung, "Theory and Use of Radioactivity Code RACC," ANL/FPP/TM-122, Argonne National Laboratory (1979).
7. J. Jung, "Multigroup Neutron Activation Cross Section Library RACCLIB and Decay Chain Data Library RACCLIB for the Radioactivity Calculation Code RACC," ANL/FPP/TM (to be published).
8. U.S. Nuclear Regulatory Commission, Regulatory Guide 1.4, "Assumptions Used for Evaluating the Potential Radiological Consequences of a Loss-of-Coolant Accident for Pressurized Water Reactors," Rev. 2 (June 1974).

Table of Contents

		Page
22.1	INTRODUCTION/SUMMARY	22-1
22.2	ECONOMIC GUIDELINES AND ASSUMPTIONS	22-2
22.2.1	Level of Technology	22-3
22.2.2	Reference Site	22-7
22.2.3	Design Allowance, Contingency and Spare Parts	22-7
22.2.4	Indirect Cost Allowances	22-8
22.2.5	Time-Related Costs	22-9
22.3	KEY DESIGN, PERFORMANCE AND OPERATIONAL FEATURES	22-13
22.4	CAPITAL COST ACCOUNTS	22-17
22.5	CAPITAL COSTS	22-18
22.5.1	Land and Land Rights (Acct 20)	22-34
22.5.2	Structures and Site Facility (Acct 21)	22-35
22.5.3	Reactor Plant Equipment (Acct 22)	22-60
22.5.4	Turbine Plant Equipment (Acct 23)	22-87
22.5.5	Electrical Plant Equipment (Acct 24)	22-91
22.5.6	Miscellaneous Plant Equipment (Acct 25)	22-94
22.5.7	Special Materials (Acct 26)	22-96
22.5.8	Construction Facilities, Equipment and Services (Acct 91)	22-97
22.5.9	Engineering and Construction Management Services (Acct 92)	22-98
22.5.10	Other Costs (Acct 93)	22-98
22.5.11	Interest During Construction (Acct 94)	22-99
22.5.12	Escalation During Construction (Acct 95)	22-99
22.6	BUSBAR ENERGY COST ELEMENTS	22-101
22.6.1	Annual Levelized Capital Cost	22-102
22.6.2	Annual Operations and Maintenance Cost	22-103
22.6.3	Annual Scheduled Component Replacement Cost	22-108
22.6.4	Annual Fuel Cost	22-110
22.6.5	Plant Availability	22-110
22.6.6	Plant Capacity	22-111

Table of Contents (Cont'd)

Page

22.7 BUSBAR ENERGY COST CALCULATIONS 22-111

22.8 COMPARISON WITH OTHER TOKAMAK STUDIES 22-112

22.9 COMPARISON OF FUSION WITH FISSION AND COAL 22-117

List of Figures

Number		Page
22-1	Fusion power plant expenditure pattern	22-11
22-2	Comparison of constant and then current analyses	22-12
22-3	Factors for IDC and EDC	22-100
22-4	STARFIRE COE is competitive	22-118

List of Tables

Number		Page
22-1	Summary of STARFIRE Capital Costs	22-3
22-2	Total Busbar Energy Costs	22-4
22-3	Key Design Performance and Operational Features	22-14
22-4	STARFIRE Capital Cost Accounts	22-19
22-5	STARFIRE Capital Costs	22-30
22-6	Gross National Product Price Level Deflators	22-34
22-7	Craftsmen Information	22-37
22-8	Craft Composite - Labor Rate Completion	22-38
22-9	Account Codes for Composite Crew Mix Labor Rates	22-39
22-10	Site Improvements and Facilities Costs	22-45
22-11	Reactor Building Costs	22-47
22-12	Turbine Building Costs	22-48
22-13	Electrical Equipment and Power Supply Building Costs	22-49
22-14	Plant Auxiliary Systems Building Costs	22-50
22-15	Hot Cell Building Costs	22-51
22-16	Reactor Service Building Costs	22-52
22-17	Service Water Building Costs	22-53
22-18	Fuel Handling and Storage Building Costs	22-54
22-19	Control Room Building Costs	22-55
22-20	Onsite A/C Power Supply Building Costs	22-56
22-21	Administration Building Costs	22-57
22-22	Site Service Building Costs	22-57
22-23	Cryogenics Building Costs	22-58
22-24	Security Building Costs	22-59
22-25	Ventilation Stack Costs	22-59

List of Tables (cont'd)

Number		Page
22-26	First Wall/Blanket Costs	22-61
22-27	Shielding Costs	22-62
22-28	Relative Shielding Costs	22-63
22-29	Cost of the Magnets	22-64
22-30	RF Heating and Current Drive System Costs	22-65
22-31	Primary Structure and Support Systems Cost	22-68
22-32	Economic Comparison of Centerpost Materials	22-69
22-33	Reactor Vacuum System Costs	22-70
22-34	Power Supply, Switching and Energy Storage Costs	22-72
22-35	Main Heat Transfer and Transport System Costs	22-75
22-36	Fuel Handling and Storage System Costs	22-79
22-37	Maintenance Equipment Costs	22-81
22-38	Closed Loop System Costs	22-83
22-39	Standby Cooling System Costs	22-84
22-40	Reactor Instrumentation and Control System Costs	22-85
22-41	Cost of the Reactor Plant Equipment Spare Parts	22-86
22-42	Heat Rejection System Costs	22-88
22-43	Condensing System Costs	22-89
22-44	Feedwater Heating System Costs	22-89
22-45	Other Turbine Plant Equipment Costs	22-90
22-46	Station Service Equipment Costs	22-92
22-47	Switchboard Costs	22-92
22-48	Electrical Structures and Wiring Container Costs	22-93
22-49	Power and Control Wiring Costs	22-93
22-50	Transportation and Lifting Equipment Costs	22-95

List of Tables (Cont'd)

Number		Page
22-51	Air and Water Service System Costs	22-96
22-52	Communications Equipment Costs	22-96
22-53	STARFIRE Special Materials	22-97
22-54	Factors for IDC and EDC	22-101
22-55	Operations and Maintenance Cost Accounts	22-103
22-56	Fusion Power Plant Staff	22-105
22-57	Operations and Maintenance Cost Accounts	22-108
22-58	Other Scheduled Reactor Replaceable Components	22-109
22-59	Direct Cost Comparison of Tokamak Concepts	22-114

22.1 INTRODUCTION/SUMMARY

In order for a fusion reactor to become a commercially attractive power source, three criteria have to be satisfied and demonstrated. First, the performance and reliability of the new technologies associated with fusion will have to be proven to the degree of commercial practice. Secondly, the safety and the environmental impact of the fusion process and fuel cycle will have to be more attractive than alternative energy systems. Finally, the economics of a fusion power system have to be competitive with that of other energy systems. The purpose of this study is to develop a conceptual design that can be used to assess how well fusion can meet these criteria. The first two criteria have been discussed in the previous chapters. This chapter on Economics will estimate the capital costs associated with the developed design and assess how this conceptual design of a fusion power plant will compete in the energy marketplace.

The cost estimate of STARFIRE will be specific to this system, reflecting the unique groundrules applied to this study. However, it is expected that the study results can be used to assess the economic trends of any tokamak fusion concept. When comparing this estimate to an estimate of any existing power plant, it should be emphasized that this study is a preconceptual design with some subsystems not fully developed or defined. In these subsystems, the cost estimates were determined with implicit design allowances to account for the lack of complete definition. Fortunately, many of the balance of plant and heat transport systems are similar to the PWR systems and this enhances the cost credibility. The direct capital costs associated with the reactor plant equipment, the balance of plant equipment, land and all the related structures and site facilities, were estimated based upon supplier quotes, historical data and analogous systems. The indirect costs related to construction are assessed based upon DOE recommendations with modifications specific to this design. Time related costs account for both interest and escalation during construction. The annual costs include the annualized capital cost, the operations and maintenance costs, the fuel costs and any scheduled component replacement costs. Given these costs along with the plant capacity (net power output) and the plant availability, the busbar energy cost is determined. These costs are presented in both constant

year 1980 dollars and then - current year dollars, which represents a nominal facility cost for the first year of operation.

This chapter will define the economic guidelines and assumptions used in the study and analyses. The key design, performance and operational features will be discussed as to how they impact the economics of the overall system. The rationale for key design choices is discussed in Chapters 2 and 5. The capital cost accounts, which follow the DOE guidelines and provide a uniform evaluation tool, will be presented, noting any unique STARFIRE modifications. Following this, the estimated capital costs are discussed highlighting any significant influencing factors or components.

The total direct and indirect costs are summarized in Table 22-1 for both 1980 constant year dollars and 1986 then-current dollars. Table 22-2 shows the total busbar energy cost for the fusion generated energy. These values are higher than are currently being projected for new fission plants, but STARFIRE fusion power plants will become competitive as the cost of fissile fuel continues to escalate compared to the negligible cost of the fusion fuel. Section 22.8 and 22.9 will center on the comparison of the STARFIRE power plant economics and competing energy systems.

22.2 ECONOMIC GUIDELINES AND ASSUMPTIONS

To assure a consistent, uniform and complete economic evaluation of STARFIRE, the DOE guidelines as outlined in "Fusion Reactor Design Studies - Standard Accounts for Cost Estimates,"[1] were adopted to the maximum extent. This will assist in evaluation of STARFIRE in a consistent manner with respect to alternate energy systems. To ensure that all data is consistent and easily comprehended, the study guidelines will be defined in the following subsections. These guidelines apply both to design and economic analyses. All costs quoted in this report will be 1980 year dollars unless defined otherwise. It is assumed that the user of the power plant will be an investor owned utility.

Table 22-1. Summary of STARFIRE Capital Costs

	Cost Account	Cost ($M)
20	Land and Land Rights	3.30
21	Structures and Site Facilities	346.58
22	Reactor Plant Equipment	968.62
23	Turbine Plant Equipment	249.68
24	Electric Plant Equipment	117.28
25	Misc Plant Equipment	40.77
26	Special Materials	0.25
	Total Direct Cost	1726.48
91	Construction Facilities, Equip & Services	172.65
92	Engineering and Constr Mgmt Services	138.12
93	Other Costs	86.32
	Subtotal	2123.57

		1980 Constant	1986 Then-Current
94	Interest During Construction	276.70	671.69
95	Escalation During Construction	0.00	402.63
	Total Capital	2400.27	3197.89
	Cost/Generating Capacity ($/kWe)	2000	2665

22.2.1 Level of Technology

The design philosophy of STARFIRE was to adopt the current state-of-the-art technology for all BOP systems except where incorporation of specific advances in technology will enhance the performance, schedule and/or cost of STARFIRE. An example is the use of three stages of moisture separation for the steam turbine rather than the current practice of using one stage. This improves the turbine cycle efficiency from 34 to 36%. In the STARFIRE construction time-frame, it is likely that this improvement would be a

Table 22-2. Total Busbar Energy Cost

	Annual Cost ($M)	
	1980 Constant	1986 Then-Current
Annualized Cost of Capital	240.03	479.68
Operations and Maintenance	19.41	26.01
Scheduled Component Replacement	17.36	23.26
Fuel	0.33	0.44
Total Annual Cost	277.13	529.39
Cost of Electricity (Mill/kWh)	35.1	67.1

then-current technology. Another example is the use of multiplex cabling and distributed microprocessors to reduce schedule constraints and system costs. Most of the BOP systems represent current PWR technology, specifically the steam generators, Turbine and Electric Plant Equipment, condensing and heat rejection equipment and most of the Miscellaneous Plant Equipment. The Reactor Building, albeit unique, represents current construction practices and should present no difficulty. All other buildings are considered to be of conventional design.

In the reactor plant equipment, there exist three levels of technology. The first level is that which represents the technologies which have been demonstrated on a commercial power plant. Typical of this level is the Primary and Closed Coolant Systems, power supplies, portions of the Radioactive Waste Treatment and Disposal system and most of the Other Reactor Plant Equipment. The second level of technology is represented by technologies which have been demonstrated in existing power plants, but the application, design and/or configuration is new or unique. This level is only a modest extrapolation of the existing state of the art. Examples of this would be elements of the shielding, the Primary Structure and Support, the Residual

Heat Removal System, the Atmospheric Tritium Recovery System, elements of the maintenance equipment, special heating systems, inert atmosphere system and reactor I&C system. The third level of technology has not been demonstrated in commercial power plant design, but have been commercially demonstrated in other industries. By the time STARFIRE is to be constructed, all these systems will have been commercially demonstrated in power plants. This class would be representative of the first wall/blanket/limiter systems, the superconducting coils, rf power amplifiers, waveguides, circulators, large cryopumps, ECRH system components, cryogenic cooling, tritium processing and storage and special remote maintenance equipment.

Another aspect of the level of technology involves the design and operational philosophy of remote maintenance. This philosophy will require a reevaluation of current power plant design criteria, procurement procedures and operational practices. Designs will have to be modified or redesigned for modular replacement and tighter control will have to be enforced on specifications and interchangeability of parts. This will be an evolutionary change in the power industry but it will be necessary in the future.

In all of the foregoing discussions, it was implied that STARFIRE is not the first of a kind tokamak fusion power plant. Specifically it has been assumed that STARFIRE is the 10th of a kind tokamak fusion power plant of a specific design technology and all systems have been thoroughly proven. Thus no equipment R&D costs are included and the equipment are costed with learning curves applied. Engineering and Construction Management Services, (Cost Account 92), will be reduced to a degree to reflect the design standardization of the reactor and BOP. No tooling costs will be included in the cost estimate as all initial tooling will have been amortized over the previously constructed fusion power plants.

Learning curves will be applied to the cost estimates for STARFIRE. The learning or experience curve is a concept which reflects a cost reduction of a product through experience as the manufactured quantity increases. This learning curve is usually charted by comparing the unit cost after a doubling of the production quantity. So, an 85% learning curve would mean the cost of the 4th unit produced would be 85% the cost of the second unit, and so on. The percent of learning is directly related to the degree and complexity of

the labor involved in the process compared to the total product cost. In the STARFIRE estimate, no further learning will be assumed, i.e. learning curve = 100%, for all large, common material purchases (such as 304SS, aluminum and graphite). Materials required for STARFIRE, which may create demand or influence marketable quantities (such as NbTi, Nb_3Sn, or B_4C), will be costed using a learning curve of 98%. Systems which have a small labor requirement, (i.e., power supplies, amplifiers and electronics), will be estimated at 95% learning. The more labor intensive systems, such as first wall/blanket modules, turbines and tritium processing equipment, will be costed at 85% learning. The actual cost reduction also depends upon the quantity of the components, units or systems produced prior to the tenth-of-a kind STARFIRE reactor. Most cost estimates from the subsystem designers for unique systems will be in the form of a first-of-a-kind unit costs. In the case of magnets, twelve TF magnets would be required for each reactor. This would result in at least 108 TF magnets of a specific design would have been purchased prior to this estimate. In this case, with a 90% learning curve, the block average cost would be roughly one-half the first unit cost.

$$\text{BLOCK AVERAGE COST} = (\text{1st Unit Cost}) \times \frac{(109^{\ln .9/\ln 2} + 120^{\ln .9/\ln 2})}{2}$$

$$= (\text{1st Unit Cost}) \times (.487)$$

With systems which exist and for which new designs are not required, the cost would be based on an existing production base and the cost reduction would not be as great.

Illustrative Example: Cryopanel vacuum pumps

Cost estimated on 1000th unit (C_{1000})

Estimated learning curve = 85%

Quantity required for each reactor = 48

$$\text{BLOCK AVE COST} = \frac{C_{1000}}{1000^{\ln .85/\ln 2}} \times \frac{(1433^{\ln .85/\ln 2} + 1480^{\ln .85/\ln 2})}{2}$$

$$= C_{1000} \times (.916)$$

22.2.2 Reference Site

The reference site chosen for the STARFIRE study is in concert with the DOE recommendations delineated in Reference 1. The site is near the fictitious midwestern town of Middletown (population 25,000), adjacent to the "North River". For actual labor and material costs, Kansas City, MO was chosen for specific values. The site size was assumed to be 1000 acres with the cost per acre to be $3000 (1980$). The North River will provide access for barge shipment of large equipment and provide sufficient water for the necessary plant requirements. The seismic requirements have been upgraded to a Zone 2 so the design would be acceptable in approximately 95% of the land area of this country. All other reference site recommendations were adopted.

22.2.3 Design Allowance, Contingency and Spare Parts

Design allowance is a method of accounting for the cost differences between a technically immature design, upon which the cost estimate was based, and the final mature design. The STARFIRE cost estimate assumes that the Structures and Site Facilities and the Balance of Plant, Accounts 21, 23, 24 and 25 (see Sec. 22.4 for more detail), are sufficiently well developed in the fission industry and are well enough understood in concept not to require any design allowance. This is in agreement with Ref. 2, Appendix A. The Reactor Plant Equipment, Account 22, incorporates mainly new equipment and thus requires a design allowance. Contrary to Ref. 2, the approach of using a fixed allowance of 10% was not incorporated. Instead, each subsystem was analyzed as to its degree of technical and production maturity of the design. Based upon this an appropriate design allowance was levied.

Contingency allowance is an amount added to an estimate to account for the difference between the sum of individual items estimated and the total amount that is reasonably expected to be spent, considering the degree of uncertainties in the estimated quantities, prices, labor productivity, etc., embodied in the estimate details. This contingency allowance is intended to reduce the risk of an overrun. The STARFIRE estimate uses the recommended value of 15% for Accounts 21, 22, 23, 24 and 25 from Ref. 2.

A power plant should have a supply of spare parts on hand in inventory in order that the plant be quickly put back into operation in the case of breakdown. Spare parts do not include equipment that is permanently connected in the systems for redundancy. The spare parts should be considered capital cost items that are held in reserve for unexpected breakdowns or scheduled maintenance actions. If lead times are unusually long, then the spare parts inventory should be increased to assure adequate supplies.

The spare parts allowance is assumed to be a percentage of the direct cost of installed equipment. The adopted spare parts allowances from Ref. 2 are:

Cost Account	Spare Parts Allowance
21, 22, 23	2%
24	4%
25	3%
Others	0%

Any costly component that requires a spare inventory will be separately identified. Section 22.5.3.16 will detail the major items identified as spare parts in the Reactor Plant Equipment. These major items are additive to the standard allowances given previously.

22.2.4 Indirect Cost Allowances

The indirect cost allowances are expenses resulting from the support activities required to design, fabricate, assemble and checkout the entire power plant. The three major accounts are Construction Facilities, Equipment and Services (Account 91), Engineering and Construction Management Services (Account 92) and Other Costs (Account 93). For further detail as to specific items included, in each account, see Sec. 22.4.

Account 91, Construction Facilities, Equipment and Services will be somewhat different from fission plants in that more modular plant equipment is planned with assembly and major checkout being conducted off-site. These preassembled modules will be much larger than most fission components with the exception of the PWR pressure vessel. It is felt that a reasonable approach to the cost estimate of the Construction Facilities, Equipment and Services is to adopt an allowance of 10% of the total direct cost. This

approach was selected because the plant size and power output is only slightly larger than a current PWR while the estimate is being scaled as a percentage of the direct cost which is considerably larger than the direct cost of a current PWR power plant. Most of the high cost items (magnets, blanket or shields) require very little handling and no field construction.

Engineering and Construction Management Services (Account 92) consists of the expenses for reactor and plant engineering and construction management services. The STARFIRE design philosophy of applying the current and envisioned power plant technology will certainly reduce the required engineering for the BOP and the heat transfer and transport systems of the reactor. Also the 10th of a kind reactor will require reduced engineering services. The only engineering services being considered are those supportive to requirements which are: 1) site specific, 2) utility specific, 3) new regulatory guides and 4) design improvements. The construction management services will be eased somewhat due to familiarity with the PWR systems and the nine prior fusion systems. Offsetting those advantages is the management of construction of a much larger reactor building, the handling of large and expensive equipment and coordination of more complex tasks. Based upon the above considerations and the capital intensive cost base, it was concluded that costs for Account 92 could be represented by a factor of 8% of the Total Direct Capital Cost.

Other Costs (Account 93) involve the taxes and insurance, staff training and plant startup and owners G&A. Most of these items scale directly with the direct capital expense and therefore the STARFIRE estimate will adopt the recommended 5% of the Total Direct Capital Cost.[1]

22.2.5 Time-Related Costs

Time-related costs are incurred because the fabrication, installation, construction, checkout and startup occur over a finite period of time. These expenses are related to the opportunity cost of money and the changes in the purchasing power of the dollar with respect to time. Account 94 represents the allowance for funds used during construction (AFDC) or interest during construction (IDC) and is the expense of the interest charges of financing the debt, the charges on the equity (common stock) portion of the financing

and any administrative charges on the financing. The interest during construction is determined by three elements; the total direct and indirect capital cost of the facility, the time distribution of the capital expenditures and the aggregate interest rate on all financing charges. The direct and indirect costs are estimated using present 1980 year dollar price levels. The time distribution of the capital expenditures is dependent upon the construction schedule, the construction techniques, the material and equipment purchases and progress payments and the checkout and startup schedule. A preliminary analysis was completed which assessed the time-phased expenditures for the land and land rights, the structures and site facilities, the reactor plant equipment, the BOP equipment, construction facilities, equipment and services, reactor and plant engineering and other owner costs considering the initial construction phases, the reactor and BOP equipment assembly, checkout and plant startup. The findings were very similar to the cumulative capital expenditure curve in Ref. 1 which shows 50% of the cost is incurred at 60% of the elapsed construction time. The STARFIRE data tended to show an earlier midpoint expenditure due to earlier progress payments and a one year checkout/startup phase. If the checkout/startup phase is shortened with more construction and assembly being accomplished in this period, the payout schedule would be very similar. Also in the then-current dollar analysis mode, any reduction in interest charges due to expenditure shifts tends to be offset by the escalation effects. Therefore the expenditure pattern in Ref. 1 will be adopted, see Fig. 22-1.

The aggregate interest rate is representative of a privately owned utility. The following assumptions[1] are used as a basis for determining the cost of capital.

- Utility is investor owned
- Capital structure is 53% debt financing and 47% equity (common stock) financing
- Nominal cost of debt financing is 8% per year
- Nominal cost of equity financing is 14% per year
- Power plant economic lifetime is 30 years with no salvage value
- Cost escalation and general inflation is 5% per year

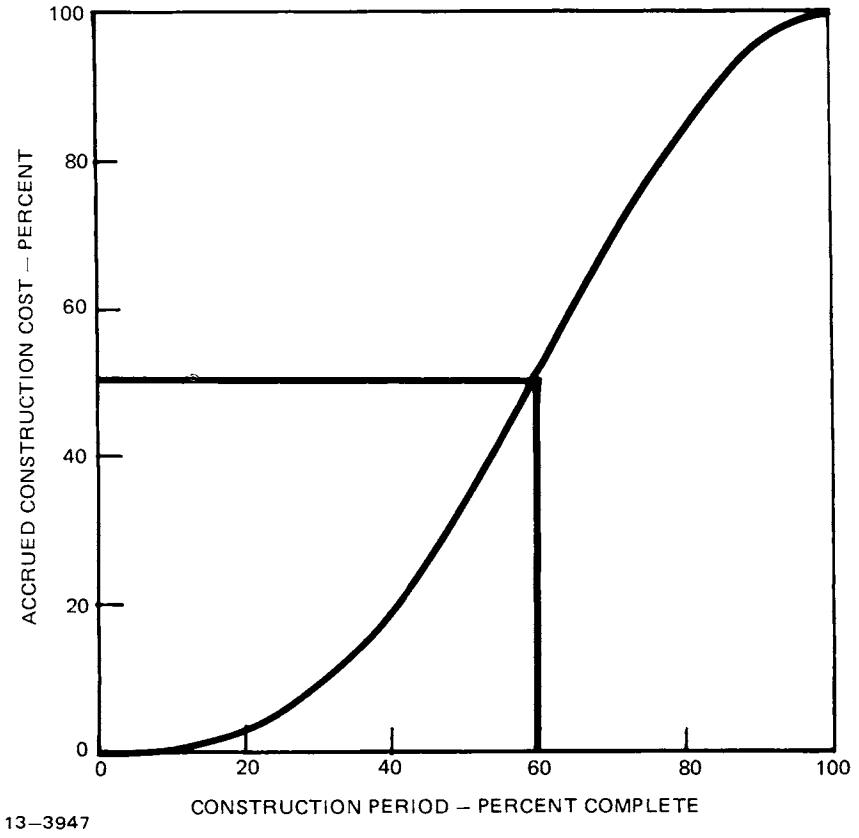

Figure 22-1. Fusion power plant expenditure pattern.

Given these assumptions, the nominal cost of capital is 10% per year and the real (deflated) cost of capital is 5% per year.

Two modes of economic analysis are utilized in this study. The first is a "constant dollar" mode which assumes the purchasing value of the dollar remains constant over time. This constant dollar analysis will express the cost in 1980 year dollars. The inflation is assumed to be zero and the cost of capital is 5% per year. The second analysis is the "then-current dollar" mode which assumes the purchasing value changes over time (inflation is non-zero). In this mode, the cost of capital is 10% per year and the escalation is 5% per year. Figure 22-2 illustrates how interest and escalation are additive to the direct and indirect cost of capital. The specific values assumed for interest and escalation have been standardized[1] for comparison purposes with other fusion studies and are not intended to reflect

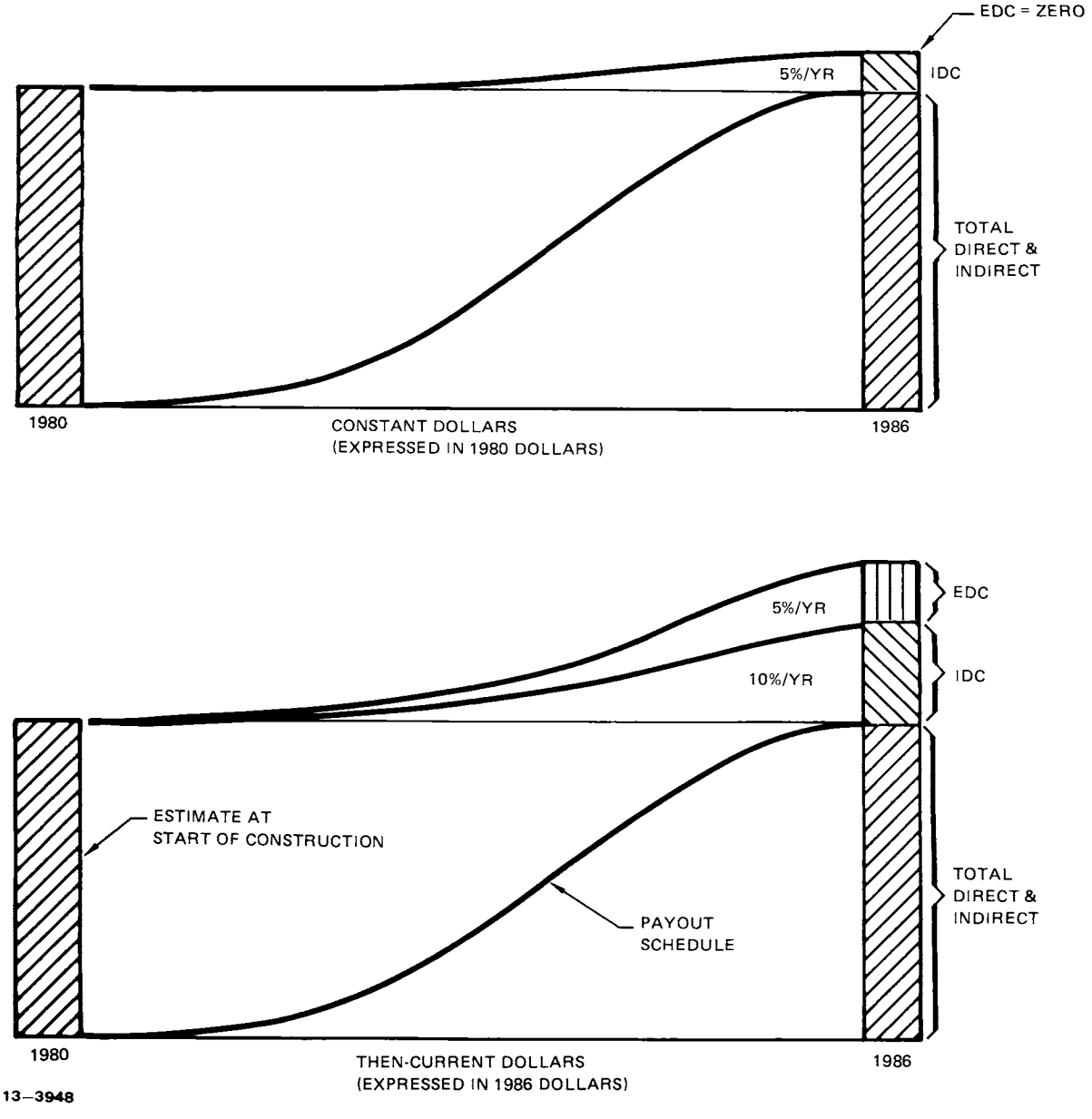

Figure 22-2. Comparison of constant and then-current analyses.

present real world interest and inflation fluctuations. All costs reported in Accounts 20 through 26 and 91 through 93 are presented in 1980 dollars and all effects of cost of capital and escalation during construction are reported respectively in Accounts 94 and 95 as factors of total direct and indirect costs.[1] The then-current dollar analysis mode is essentially a nominal first year facility cost, with escalation only computed during construction.

Great care should be exercised when comparing the cost of STARFIRE to that of other energy sources. Key factors involve the cost basis of the estimate (usually the start of construction), the length of construction, the basis for the cost of capital and escalation, and the presentation mode of the facility economics (e.g. constant, then-current, or levelized). Any new energy source, starting construction now, will certainly cost more than an existing energy source due to the real world inflation. Therefore any comparison should only consider new starts on alternative energy sources.

22.3 KEY DESIGN, PERFORMANCE AND OPERATIONAL FEATURES

There exist several key features of a power plant which directly influence the capital and operational cost of the facility. Section 22.2 has been discussing some of the economic and financial features and this section will discuss the design, performance and operational features of economic importance. It is felt that it is necessary to highlight these features to gain insight into economic implications inherent to the selected baseline features of the STARFIRE. The selection of the design point was preceded by a series of economic trade studies by ANL and MDAC on several key design parameters discussed in Chap. 5. Table 22-3 lists some of the major design, performance and operational features that have a significant effect on the power plant economics.

Table 22-3. Key Design, Performance and Operational Features

- Tenth of a Kind of a Specific Design Technology
- Steady State Operation
- Enhanced Maintenance Access
- rf Heating and Current Drive
- Limiter/Vacuum Impurity Control System
- Stainless Steel First Wall and Blanket Structural Material
- Average Wall Loading of 3.6 MW/m^2
- Reactor Thermal Power Output of 4000 MW
- Pressurized Water Primary Coolant
- No Intermediate Coolant Loop
- High Efficiency Steam Turbine - Generator
- High Plant Availability
- Low Fuel Cost

The overall design philosophy of STARFIRE reflects that it is not the first of a kind or demonstration fusion power plant, rather it represents the product of a mature fusion energy industry, namely the tenth of a specific design technology. Several features incorporated into STARFIRE reflect this concept, such as the steady state operation, enhanced maintenance access, rf heating in place of neutral beams and limiter/vacuum impurity control system. These features have not yet been throughly demonstrated, but they have been shown feasible and would be typical of the design features to be found on a mature fusion power plant. The steady state operation relieves some of the system fatigue problems and increases the system reliability so necessary for commercial operation. Steady state operation also eliminates the need for thermal and electric energy storage. Commercial operation also requires adequate maintenance access and provisions sometimes not provided in experimental devices or demonstration machines. The STARFIRE design consciously incorporated wall/blanket sectors which were accessible and maintainable, did not intertwine superconducting coils, provided adequate space around the reactor for access for maintenance equipment and designated hot cells for wall/blanket disassembly and refurbishment. All of these factors increased the capital costs, but they are necessary to have a credible commercial design. Another factor in maintenance which had a pronounced effect on the

system economics is the decision to have fully remote maintenance in the reactor building and hot cells. This decision anticipates that the nuclear regulatory environment will result in this becoming a requirement by the time fusion becomes a commercial reality. Remote handling is currently undergoing rapid development and it is anticipated that the necessary equipment has been developed and is being utilized.

The incorporation of rf heating in place of neutral beams and the limiter/vacuum impurity control in place of a magnetic divertor was based upon design simplification, enhanced maintainability and improved performance. A side benefit was also that the systems are less expensive than the alternatives.

It has been shown that tokamak reactors exhibit an economy of scale; i.e. larger power reactors have lower cost of energy. However, three considerations important to the utilities limit the desirable power rating of a plant. The first is the difficulty of raising the capital for larger power plants. The second relates to the cost of reserve electric power capacity that the utility must provide to compensate for scheduled and unscheduled outages in addition to the impact on the grid of an unscheduled trip. The cost of reserve capacity increases with the size of the individual power plant. The third is the maximum capacity of a single turbine generator, postulated to be in the range of 1400 MWe, gross, by the year 2000. Based on recommendations by the Utility Advisory Committee for STARFIRE, the most desirable power rating at present is in the range of 3000-4000 MW for thermal power and approximately 1250 MW (net) for electrical power. Therefore the power level of STARFIRE was selected as 1200 MWe.

A significant element of the STARFIRE conceptual design is the selection of the first wall and blanket structural material. A key factor is the anticipated integral wall loading or wall fluence (MW-yr/m^2). A trade study was conducted which concluded that a fluence limit of 16 MW-yr/m^2 for a PCA SS was reasonable and would yield reasonable economic results. The neutron wall loading also has a substantial impact on the physical size of the reactor. For the same fusion power, higher neutron wall loading results in a smaller surface area, higher power density, smaller reactor volume and potentially lower cost. This underlines the motivation for developing

designs with higher wall loads. There are limitations, however, on the ability to produce and use high wall loads. The upper limits on the use of high wall loads are dictated primarily by the first-wall cooling capability and the structure lifetime. Constraints such as the maximum operating temperature and thermal stresses placed an upper-bound on the allowable wall load. For a given fluence lifetime, the neutron wall load is limited so that the frequency of structure replacement is not excessive. For a given structural material and a fluence lifetime, the loss of energy production resulting from choosing high neutron wall loading and resultant short wall lifetimes was weighed against the economic gain realized by designing a small size reactor. The STARFIRE average neutron wall loading was chosen to be 3.6 MW/m^2.

Several different primary coolants were considered for STARFIRE with varying heat transfer and transport properties, pumping power requirements and allowable structural temperatures with resultant turbine inlet temperature conditions. Chapter 5 discusses in more detail the technical and economic justifications for the choice of pressurized water coolant. The economic factors that had an influence on the selection of coolant operating conditions were the pumping power required and the turbine inlet temperature which governs the gross efficiency of the power conversion system. For each 10 MW of pumping power (or auxiliary power in general), the then-current 1986 COE (cost of electricity) was increased approximately 1/2 mill/kwh (approximately 0.8%) which is equivalent to a capital increase of approximately $30 M. If the gross cycle efficiency is reduced one percentage point (36 to 35), the COE will increase over two mill/kwh (>3%) which is equivalent to a capital increase of over $100 M. With these incentives, efforts were concentrated to maintain superior performance. For example, the current practice in PWR steam turbines is to use a single stage of moisture separation with a resulting gross cycle efficiency in the 34% range. With three stages of moisture separation the efficiency can be increased to 36%. Thus, the R&D costs associated with this technology advance would be amortized over the first few fusion plants or by more advanced fission plants. The STARFIRE design conditions also permit elimination of the thermal energy storage and intermediate coolant loop.

One of the most economically influential operational features of any power plant is its availability. A reduction in availability from a nominal 75% to 74% increases the COE almost one mill/kwh for a capital intensive facility like STARFIRE. STARFIRE was designed principally around a PWR BOP which typically has an availability of 60 to 80%. The reactor design was developed to permit all scheduled maintenance during maintenance of the BOP. Use of redundancy, emphasis on ease of component replacement and development of reliable components are thought to permit achieving an overall plant availability of 75%. This availability also includes a major shutdown for TF magnet anneals every 10 years. The steady state operation considerably helped the system reliability as well as yielding a 100% plasma duty factor.

The periodic wall and blanket replacement is a very important operational feature. An intergral wall loading of 16 MW-yrs/m^2, neutron wall load of 3.6 and an availability of 75%, yield a wall life of approximately six calendar years. The maintenance scenerio calls for replacing one sixth of the FW/B sectors every year during the plant annual maintenance period and the cost is accounted for in the Annual Scheduled Component Replacement Costs. The remote maintenance equipment is designed to accomplish the required replacement within the annual plant maintenance period. The resultant impacts of remote maintenance on the reactor and hot cell have been incorporated in both the design and cost analyses. Cost for the maintenance equipment is shown in Account 22.06.01 under Other Reactor Plant Equipment.

Another attractive feature of a D-T fusion power plant is the low cost of fuel. Deuterium is currently estimated to cost in the range of $2000/kg.[2]. If the reactor consumes 1/2 kg/day, the annual deuterium cost is approximately $300,000. Adequate tritium is being bred by the reactor for its own usage, hence it is considered as a no cost item. Thus the fusion fuel cost will amount to approximately 0.04 mills/kWh versus 8.7 for fission and 31.9 for coal for similar sized 1200 MW plants.[3]

22.4 CAPITAL COST ACCOUNTS

The cost accounting format used in the STARFIRE conceptual design conforms to the guidelines provided by the DOE "Fusion Reactor Design Studies-Standard Accounts for Cost Estimates".[1] This format will assist

in evaluating alternative reactor plant concepts. Specific accounts have been modified to more clearly represent STARFIRE's unique systems and design approaches. Table 22-4 is a listing of the STARFIRE Capital Cost Accounts. Costs are reported on any element with an account number shown (third level for Reactor Plant Equipment and second level for the remainder of the plant). Subelements are shown to clarify the content of each cost account. The costs of the main power transformers and switchyard are not included in the cost estimate although they are discussed in the BOP section and shown in the site plan. Reference 1 excludes these items because the intent is to evaluate the generator busbar energy cost. Items included will include the generator switch gear, station service and startup tranformers and the main bus power wiring up to the generator voltage terminals.

To help understand the account system and to assist in locating cost items, an explanatory discussion will follow. All inter-system power, control and instrument wiring will be accounted for in Account 24.06 (Electric Plant Equipment, Power and Control Wiring). Impurity Control System (22.01.08) only includes the limiter. The low Z coating is reported in 22.01.01 (Blanket and First Wall, Wall Modifier) and the vacuum system is handled as a separate account (22.01.06). All Reactor Plant Equipment power supplies are included in Account 22.01.07 (Power Supply, Switching and Energy Storage) unless the power supplies are integral to the basic system. All Plant I&C except the Reactor Plant I&C will be included in Turbine Plant I&C, Account 23.07.

22.5 CAPITAL COSTS

This section will present the logic and supporting data for the generation of the STARFIRE Capital Cost Estimate. Factors which determine and influence the costs will be examined. The Total Capital Costs for STARFIRE are shown in Table 22-5. The table is identical to Table 22-4 except the subelements are eliminated and only those elements for which costs are to be reported are shown. The total direct cost for the plant is $2124 M and the total Capital Cost is $2400 M in constant 1980 dollars and $3198 M in the then-current 1986 dollars.

Table 22-4. STARFIRE Capital Cost Accounts

ACCOUNT NUMBER	ACCOUNT TITLE
20	LAND AND LAND RIGHTS
20.01	Land and Privilege Acquisition
20.02	Relocation of Buildings, Utilities, Highways, and Other Services
21	STRUCTURES AND SITE FACILITIES
21.01	Site Improvements and Facilities
	General Yard Improvements
	Grading, General Excavation and/or Fill, Landscaping, Site Clearing
	Roads, Sidewalks and Parking Areas
	Retaining Walls
	Fences, Railings, and Gateways
	Sanitary Sewer System
	Yard Drainage and Storm Sewer System
	Roadway and General Yard Lighting
	Waterfront Improvements
	Revetments
	Levees
	Breakwaters
	Transportation Access (Off Site)
	Highway Access
	Railway Access
	Waterway Access Facilities
	Air Access Facilities
21.02	Reactor Building
	Basic Building Structures
	Earth Work Including Dewatering, Walers Steel Sheeting
	Substructure Up to Grade Including Concrete, Reinforcing, Forms, Embedments
	Superstructure
	Special Shielding and Air Locks
	Building Services
	Plumbing
	Heating, Ventilation, Air-Conditioning (See 22.05.07 and 22.06.05)
	Fire Protection System (Lighting and Service Power Covered in 24.07)
21.03	Turbine Building
	Basic Building Structures
	Earth Work
	Substructure, Embedments
	Superstructure Including Structural and Gallery Steel
	Building Services
	Plumbing
	Heating, Ventilation, Air-Conditioning
	Fire Protection System

Table 22-4. STARFIRE Capital Cost Accounts

ACCOUNT NUMBER	ACCOUNT TITLE
21	STRUCTURES AND SITE FACILITIES (cont'd)
21.04	Cooling System Structures
	Intake Structures
	Earth Work
	Supply Pump House
	Protective Relief Slabs for Supply Pipe Lines
	Discharge Structures
	Earth Work
	Protective Relive Slabs for Discharge Lines
	Unpressurized Intake and Discharge Conduits
	Discharge Tunnel
	Discharge Canal
	De-icing Pump Pit
	Recirculating Structures
	Earth Work
	Recirculating Pump House
	Protective Relief Slabs for Circulating Pipe Lines
	Cooling Tower Earth Work (See 23.03.03 for cooling towers)
21.05	Electrical Equipment and Power Supply Building
	Basic Building Structures
	Earth Work
	Substructure, Embedments
	Superstructure Including Gallery Steel
	Building Services
	Plumbing
	Heating, Ventilation, and Air-Conditioning
	Fire Protection System
21.06	Plant Auxiliary Systems Building (Including Switchgear Bay)
	Basic Building Structures
	Building Services
21.07	Hot Cell Building
	Basic Building Structures
	Building Services
21.08	Reactor Service Building
	Basic Building Structures
	Building Services
21.09	Service Water Building
	Basic Building Structures
	Building Services
21.10	Fuel Handling and Storage Building
	Basic Building Structures
	Building Services

Table 22-4. STARFIRE Capital Cost Accounts

ACCOUNT NUMBER	ACCOUNT TITLE
21	STRUCTURES AND SITE FACILITIES (cont'd)
21.11	Control Room Building
	Basic Building Structures
	Building Services
21.12	On-Site A/C Power Supply Building
	Basic Building Structure
	Building Services
21.13	Administration Building
	Basic Building Structures
	Building Services
21.14	Site Service Building
	Basic Building Structures
	Building Services
21.15	Cryogenics and Inert Gas Storage Building
	Basic Building Structures
	Building Services
21.16	Security Building
	Basic Building Structures
	Building Services
21.17	Ventilation Stack
21.98	Spare Parts Allowance
21.99	Contingency Allowance
22	REACTOR PLANT EQUIPMENT
22.01	Reactor Equipment
22.01.01	Blanket and First Wall
	First Wall
	Wall Modifier
	Neutron Multiplier
	Tritium Breeder
	Structure
	Reflector
22.01.02	Shield
	Vacuum Boundary and Plasma Chamber Shield
	Vacuum Duct Shield
	Vacuum Pump Shield
	RF & ECRH Duct Shield
	Fuel Injection Shield

Table 22-4. STARFIRE Capital Cost Accounts

ACCOUNT NUMBER	ACCOUNT TITLE
22	REACTOR PLANT EQUIPMENT (cont'd)
22.01.03	Magnet (Spares are incld in acct. 22.98)
	TF — Conductor, Stabilizer, Structure
	EF — (Cryo & RT), Insulation,
	CF — Wiring and Dump Resistors
	OH — (If Integral with Magnet)
22.01.04	RF Heating and Current Drive
	Amplifiers
	Phase Shifter
	Circulator
	Waveguide
	Window
	Grill and Duct Extension
	(Power supply incld in 22.01.07)
22.01.05	Primary Structure and Support
	Reactor Centerpost
	Thermal Isolation Struts
	Common Dewar
	TF Coil Vacuum Dewar
	Anti-torque Structure
	Carry-through Structure
	Shield Pedestal
	Equipment Support Structure
22.01.06	Reactor Vacuum
	Plasma Chamber System
	Magnet Dewar System
	Fuel Handling and Storage System
	Rad. Waste System
22.01.07	Power Supply, Switching and Energy Storage
	RF Heating and Current Drive
	TF Magnets
	CF Magnets
	OH Magnets
	ECRH Plasma Breakdown
22.01.08	Impurity Control
	Limiter and Support Structure
22.01.09	ECRH Plasma Breakdown
	Gyrotrons
	Waveguides
22.02	Main Heat Transfer and Transport Systems
22.02.01	Primary Coolant System (Including Wall, Blanket, Shield, Limiter)
	Pumps and Motor Drives, Modular and Non-modular
	Piping
	Heat Exchange Equipment
	Steam Generators
	Superheater
	Refrigerator

Table 22-4. STARFIRE Capital Cost Accounts

ACCOUNT NUMBER	ACCOUNT TITLE
22	REACTOR PLANT EQUIPMENT (cont'd)
	Reheator
	Preheator
	Steam Drums
	Tanks
	Dump Tanks
	Make-Up Tanks
	Clean-Up Tanks
	Tritium Extraction Tanks
	Hot Storage Tanks
	Pressurizing Equipment
	Clean-Up System
22.02.02	Intermediate Coolant System (Not Required)
22.02.03	Limiter Cooling System
	Pumps and Motor Drives
	Piping
	Heat Exchange Equipment
	Tanks
	Pressurizing Equipment
	Cleanup System
22.02.04	Residual Heat Removal System
	Pumps
	Piping
	Heat Exchange Equipment
	Tanks
	Pressurizing Equipment
	Cleanup System
22.03	Cryogenic Cooling System
22.03.01	Helium Liquifier - Refrigerator
22.03.02	LHe Transfer and Storage
22.03.03	He Gas Storage
22.03.04	LN_2 System

Table 22-4. STARFIRE Capital Cost Accounts

ACCOUNT NUMBER	ACCOUNT TITLE
22	REACTOR PLANT EQUIPMENT (cont'd)
22.04	Radioactive Waste Treatment and Disposal
22.04.01	Liquid Waste Processing and Equipment
22.04.02	Gaseous Wastes and Off-Gas Processing System
22.04.03	Solid Wastes Processing Equipment
22.05	Fuel Handling and Storage Systems
22.05.01	Fuel Purification Systems
22.05.02	Liquefaction
22.05.03	Fuel Preparation Systems
22.05.04	Fuel Injection
22.05.05	Fuel Storage
22.05.06	Tritium Extraction and Recovery
22.05.07	Atmospheric Tritium Recovery System
	Reactor Building Fuel Handling and Storage Building Hotcell Building
22.06	Other Reactor Plant Equipment
22.06.01	Maintenance Equipment
	Blanket and Coil Maintenance Equipment Components Rotated into Service to Allow Maintenance Other Maintenance Equipment
22.06.02	Special Heating Systems (Startup Heating, Equipment Heating, Trace Heating, etc.)
22.06.03	Coolant Receiving, Storage and Make-Up Systems
22.06.04	Gas Systems
22.06.05	Inert Atmosphere System
	Reactor Building Hot Cell and Support System
22.06.06	Fluid Leak Detection
22.06.07	Closed Loop Coolant System
	Reactor, Fuel Handling and Hot Cell HVAC All ATRS Systems Shielding Hot Cell Waste Processing Storage

Table 22-4. STARFIRE Capital Cost Accounts

ACCOUNT NUMBER	ACCOUNT TITLE
	CF Normal Coils
	Irradiated Vacuum Pumps
	Rad. Waste Treatment and Disposal
	Fuel Handling and Storage
22.06.08	Standby Cooling System
22.07	Instrumentation and Control
22.07.01	Reactor I&C Equipment (Burn Control, Plasma Control, etc.)
22.07.02	Monitoring Systems
22.07.03	Instrumentation and Transducers (Wiring is included in Acct 24.06)
22.98	Spare Parts Allowance
	Blanket Sectors
	Cryopumps
	EF Coils
	OH Coils
	Other Miscellaneous Spares
22.99	Contingency Allowance
23	TURBINE PLANT EQUIPMENT
23.01	Turbine-Generators
	Turbine-Generators and Accessories
	Foundations
	Standby Exciters
	Lubrication System
	Gas Systems
	Reheaters
23.02	Main Steam (or other fluid) System
23.03	Heat Rejection Systems
	Water Intake Common Facilities
	Circulating Water Systems
	Circulating Water Pumps and Motor Drives
	Pumps to Condensers and to the Cooling Towers
	Cooling Towers
	Foundations and Basins
	Primary Cooling Towers
	Waste Heat Cooling Tower
	Waste Heat System Heat Exchanger

Table 22-4. STARFIRE Capital Cost Accounts

ACCOUNT NUMBER	ACCOUNT TITLE
23	TURBINE PLANT EQUIPMENT (cont'd)
23.04	Condensing Systems
	Condensers
	Condensate System
	Gas Removal System
	Turbine By-Pass Systems
23.05	Feed Heating System
	Regenerators and Recuporators
	Pumps
	Tanks
23.06	Other Turbine Plant Equipment
	Turbine Auxiliaries
	Auxiliaries Cooling System
	RF and ECRH System (Non-Radioactive) Cryogenic Cooling Power Supply Cooling I&C Cooling Vacuum Pumping (Non-Radioactive) Plant HVAC Misc Plant Services
	Make-Up Treatment System
	Chemical Treatment and Condensate Purification Systems
	Central Lubrication Service System
23.07	Instrumentation and Control (I&C) Equipment
	Process I&C Equipment Automatic Monitoring and Control Isolated Indicating and Recording Gauges, Meters and Instruments
23.98	Spare Parts Allowance
23.99	Contingency Allowance
24	ELECTRIC PLANT EQUIPMENT
24.01	Switchgear
	Generator Circuits Station Service
24.02	Station Service Equipment
	Station Service and Startup Transformers Low Voltage Unit Substation and Lighting Transformers Battery System Diesel Engine Generators

Table 22-4. STARFIRE Capital Cost Accounts

ACCOUNT NUMBER	ACCOUNT TITLE
24	ELECTRIC PLANT EQUIPMENT (cont'd)
24.03	Switchboards (Including Heat Tracing)
	Main Contrl Board for Electric Systems
	Auxiliary Power and Signal Boards
24.04	Protective Equipment (General Station Grounding Systems and Cathodic Protection)
24.05	Electrical Structures and Wiring Containers
	Concrete Cable Tunnels, Trenches and Envelopes
	Cable Trays and Support
	Conduit
	Other Structures
24.06	Power and Control Wiring
	Generator Circuits Wiring
	Station Service Power Wiring
	Control Wiring
	Instrument Wiring
	Containment Penetrations
24.07	Electrical Lighting
	Reactor Building Lighting
	Turbine Building Lighting
	Electrical Equipment and Power Supply Building Lighting
	Reactor Auxiliary Systems Building Lighting
	Hot Cell and Radioactive Waste Processing Building Lighting
	Reactor Service Building Lighting
	Fuel Handling and Storage Building Lighting
	Miscellaneous Structures and Building Lighting
	Yard Lighting
24.98	Spare Parts Allowance
24.99	Contingency Allowance
25	MISCELLANEOUS PLANT EQUIPMENT
25.01	Transportation and Lifting Equipment
	Cranes, Hoists, Monorails and Conveyors
	Reactor Building Cranes
	Turbine Building Cranes
	Hot Cell Cranes
	Reactor Service Area Crane
	Miscellaneous Hoists Cranes, Jibs and Trolleys
	Other Building Cranes
	Railway
	Roadway Equipment
	Watercraft
	Vehicle Maintenance Equipment

Table 22-4. STARFIRE Capital Cost Accounts

ACCOUNT NUMBER	ACCOUNT TITLE
25	MISCELLANEOUS PLANT EQUIPMENT (cont'd)
25.02	Air and Water Service Systems
	Air Systems Water System Auxiliary Heating Boilers
25.03	Communications Equipment Local Communications Systems Signal Systems
25.04	Furnishing and Fixtures
	Safety Equipment Shop, Laboratory and Test Equipment Office Equipment and Furnishings Change Room Equipment Environmental Monitoring Equipment Dining Facilities
25.98	Spare Parts Allowance
25.99	Contingency Allowance
26	SPECIAL MATERIALS
	Initial Supply of Special (Non-Fuel and Nonstructural) Materials, Fluids, Gases and Liquids which require non standard indirect costing or fixed charge rate.
91	CONSTRUCTION FACILITIES, EQUIPMENT AND SERVICES
	Temporary Facilites
	Site Access and Improvements
	Building and Structures
	Electricity and Water (Temporary Power Lines, Pipe Lines, and Equipment for Providing Services During the Construction Period)
	Communications Equipment
	Aggregate Plant (Includes Equipment for Pouring or Receiving, Crushing, Classifying, and Wasing Sand, Stone, and Rock Aggregates)
	Concrete Batch Plant
	Construction Equipment
	Transportation, Lifting and Unloading Equipment
	Welding Equipment
	Air Compressor
	Steam Generators
	Chemical Cleaning Facilities
	Scaffold, Ladders and Stairways
	Buildings, Furnishings and Fixtures

Table 22-4. STARFIRE Capital Cost Accounts

ACCOUNT NUMBER	ACCOUNT TITLE
91	CONSTRUCTION FACILITIES, EQUIPMENT AND SERVICES (cont'd)
	Miscellaneous Items (Signs, Barricades, Rope, Tarpaulines, Plastic Sheeting, Office and Drafting Supplies, Small Tools, Welding Rod, and other Expendable Items)
	Construction Services
	Purchased Utilities
	Security Watchmen and Guards
	Education and Testing Programs for Labor Force
	Materials Receiving and Storage (Pertains only to Receiving and Handling Miscellaneous Materials at the Plant Site)
	Inspection and Testing of Construction Materials Includes Radiography Equipment, Testing Machines, etc.)
	Site Cleanup (Includes General Cleanup Operations during Construciton and Final Job cleanup)
	Operation and Maintenance of Construction Facilities and Equipment
	Insurance, Injuries and Damage (Excludes Workman Compensation Insurance, which is included in the Labor Charges associated with the Direct Costs)
92	ENGINEERING AND CONSTRUCTION MANAGEMENT SERVICES
93	OTHER COSTS
	Taxes and Insurance
	Staff Training and Plant Startup
	Owner's G&A
94	INTEREST DURING CONSTRUCTION
95	ESCALATION DURING CONSTRUCTION

Table 22-5. STARFIRE Capital Costs

ACCOUNT NUMBER	ACCOUNT TITLE	Costs (1980, $M)		
20	LAND AND LAND RIGHTS	3.30		
20.01	Land and Privilege Acquisition		3.0	
20.02	Relocation of Buildings, Utilities, Highways, and Other Services		0.3	
21	STRUCTURES AND SITE FACILITIES	346.58		
21.01	Site Improvements and Facilities		11.15	
21.02	Reactor Building		157.44	
21.03	Turbine Building		35.92	
21.04	Cooling System Structures		7.96	
21.05	Electrical Equipment and Power Supply Building		9.16	
21.06	Plant Auxiliary Systems Building		3.26	
21.07	Hot Cell Building		53.69	
21.08	Reactor Service Building		1.88	
21.09	Service Water Building		0.66	
21.10	Fuel Handling and Storage Building		8.63	
21.11	Control Room Building		3.10	
21.12	On-Site DC Power- Supply Building		2.05	
21.13	Administration Building		0.87	
21.14	Site Service Building		0.87	
21.15	Cryogenics and Inert Gas Storage Building		0.91	
21.16	Security Building		0.31	
21.17	Ventilation Stack		1.81	
21.98	Spare Parts Allowance		1.96	
21.99	Contingency Allowance		44.95	
22	REACTOR PLANT EQUIPMENT	968.62		
22.01	Reactor Equipment		589.26	
22.01.01	Blanket and First Wall			82.36
22.01.02	Shield			186.07
22.01.03	Magnets			171.57
22.01.04	RF Heating and Current Drive			33.49
22.01.05	Primary Structure and Support			52.74
22.01.06	Reactor Vacuum			4.86

Table 22-5. STARFIRE Capital Costs (Continued)

ACCOUNT NUMBER	ACCOUNT TITLE	Costs (1980, $M)	
22.01.07	Power Supply, Switching and Energy Storage		52.90
22.01.08	Impurity Control		2.45
22.01.09	ECRH Plasma Breakdown		2.82
22.02	Main Heat Transfer and Transport Systems	69.84	
22.02.01	Primary Coolant System		63.10
22.02.02	Intermediate Coolant System		-
22.02.03	Limiter Cooling System		6.19
22.02.04	Residual Heat Removal System		0.55
22.03	Cryogenic Cooling System	14.90	
22.03.01	Helium Liquifier Refrigerator		7.70
22.03.02	LHe Transfer and Storage		3.60
22.03.03	He Gas Storage		2.80
22.03.04	LN_2 System		0.80
22.04	Radioactive Waste Treatment and Disposal	4.80	
22.04.01	Liquid Waste Processing and Equipment		1.70
22.04.02	Gaseous Wastes and Off-Gas Processing System		1.80
22.04.03	Solid Wastes Processing Equipment		1.30
22.05	Fuel Handling and Storage Systems	38.60	
22.05.01	Fuel Purification Systems		8.80
22.05.02	Liquefaction		-
22.05.03	Fuel Preparation Systems		0.30
22.05.04	Fuel Injection		1.40
22.05.05	Fuel Storage		2.00
22.05.06	Tritium Extraction and Recovery		5.40
22.05.07	Atmospheric Tritium Recovery System		20.70
22.06	Other Reactor Plant Equipment	43.75	
22.06.01	Maintenance Equipment		38.30
22.06.02	Special Heating Systems		0.00
22.06.03	Coolant Receiving, Storage and Make-Up Systems		0.24
22.06.04	Gas Systems		0.08
22.06.05	Inert Atmosphere System		0.00

Table 22-5. STARFIRE Capital Costs (Continued)

ACCOUNT NUMBER	ACCOUNT TITLE	Costs (1980, $M)	
22.06.06	Fluid Leak Detection		2.00
22.06.07	Closed Loop Coolant System		1.97
22.06.08	Standby Cooling System		1.16
22.07	Instrumentation and Control	23.41	
22.07.01	Reactor I&C Equipment		7.61
22.07.02	Monitoring Systems		1.76
22.07.03	Instrumentation and Transducers		14.04
22.98	Spare Parts Allowance	66.38	
22.99	Contingency Allowance	117.68	
23	TURBINE PLANT EQUIPMENT	249.68	
23.01	Turbine-Generators	77.33	
23.02	Main Steam System	4.37	
23.03	Heat Rejection Systems	44.34	
23.04	Condensing Systems	19.18	
23.05	Feed Heating Systems	9.39	
23.06	Other Turbine Plant Equipment	50.84	
23.07	Instrumentation and Control (I&C) Equipment	8.70	
23.98	Spare Parts Allowance	3.41	
23.99	Contingency Allowance	32.12	
24	ELECTRIC PLANT EQUIPMENT	117.28	
24.01	Switchgear	12.39	
24.02	Station Service Equipment	17.04	
24.03	Switchboards	7.80	
24.04	Protective Equipment	2.11	
24.05	Electrical Structures and Wiring Containers	17.40	
24.06	Power and Control Wiring	35.99	
24.07	Electrical Lighting	8.20	
24.98	Spare Parts Allowance	1.21	
24.99	Contingency Allowance	15.14	
25	MISCELLANEOUS PLANT EQUIPMENT	40.77	
25.01	Transportation and Lifting Equipment	15.68	
25.02	Air and Water Service Systems	12.35	
25.03	Communications Equipment	6.22	

Table 22-5. STARFIRE Capital Costs (Continued)

ACCOUNT NUMBER	ACCOUNT TITLE		Costs (1980, $M)	
25.04	Furnishing and Fixtures			0.75
25.98	Spare Parts Allowance			0.52
25.99	Contingency Allowance			5.25
26	SPECIAL MATERIALS		0.25	
	TOTAL DIRECT COST		1726.48	
91	CONSTRUCTION FACILITIES, EQUIPMENT AND SERVICES	(10%)	172.65	
92	ENGINEERING AND CONSTRUCTION MANAGEMENT SERVICES	(8%)	138.12	
93	OTHER COSTS	(5%)	86.32	
	SUBTOTAL		2123.57	
		1980 CONSTANT	1986 THEN-CURRENT	
94	INTEREST DURING CONSTRUCTION	276.70	671.69	
95	ESCALATION DURING CONSTRUCTION	0.00	402.63	
	TOTAL CAPITAL	2400.27	3197.89	
	$/kWe	2000	2665	

The following subsections will discuss in detail each of the cost accounts. Any cost estimates or data obtained in years prior to 1980 will be adjusted for inflation effects by the Gross National Product Price Level Deflator Index as shown in Table 22-6 unless noted otherwise.

Table 22-6. Gross National Product Price Level Deflators

PERIOD	PRICE DEFLATOR*
1972	100.00 (Base)
1973	105.80
1974	116.02
1975	127.18
1976	133.71
1977	141.70
1978	152.05
1979	165.46
1980	180.22 (Est.)

* Ref - U.S. Commerce Department "Monthly Survey of Current Business"

22.5.1 Land and Land Rights (Acct 20)

The reference plant site was chosen to be 1000 acres in a midwestern location. Section 22.2.2 defines the guidelines assumed regarding the plant site. The land requirements are less severe than for an LWR in regard to exclusion boundaries and hence the 1000 acres are deemed adequate. In the case of constructing multiple plants at the common site, sufficient space is provided. The cost associated with the land and privilege acquisition is estimated at 1000 acres times \$3,000/A[1], $C_{20.01}$ = \$3.0 M. The cost of the initial clearing of the land, demolition of existing structures and relocation of buildings, highways and railroads is estimated to be 10% of the land cost, i.e. $C_{20.02}$ = \$0.3 M. This is a reasonable value because the topography and site characteristics are amenable to the STARFIRE requirements and the site access[1] i.e. roads, railway and barge facilities are adequate. The value of the land is really a nondepreciable asset, but following the recommendations in Ref. 1, the cost of land will be treated as a depreciating asset to simplify the economic analysis.

22.5.2 Structures and Site Facility (Acct 21)

This account covers all direct costs associated with the physical plant buildings such as reactor, turbine, electrical equipment, cooling system structures, site improvements and facilities, miscellaneous structures and building work, and ventilation stack. A full description of the items covered is shown in Table 22-4. The cost estimates for this account were prepared by The Ralph M. Parsons Company and recorded in a separate document which is available upon request. More detailed definition is given in Chap. 20, Balance of Plant Design.

The facility is located in a secured area within the site as described in Sec. 22.2.2.1. The site is adjacent to the "North River" which supplies adequate water for cooling purposes. The river is assumed to be navigable by barge traffic throughout the year to provide a means to ship in the large modules and equipment. Highway access is also provided by eight kilometers of secondary road leading to a state highway. The secondary road requires no improvement to permit overland shipments. Railroad access will be provided by constructing a five mile railroad spur from the main line to the plant site. Other site-related assumptions have been established as follows:

- Incoming power will be provided by two independent EHV power sources, probably 345-kV or high voltage lines.
- Power and water for construction are available at the site boundary.
- Communication lines will be provided at the site boundary.
- Sanitary sewage system will be available for tie-in at the site boundary.
- An auxiliary boiler furnishing plant auxiliary steam is included in the facility design.
- Plant utility systems including compressed air, inert gas storage and distribution, and portable and demineralized water are included in the facility design.
- Personnel parking will be located outside the facility perimeter close to the guard station that will control incoming and outgoing personnel, vehicles and rail cars.

- The facility will be located on level ground at an elevation unaffected by potential flooding.
- Seismic criteria UBC* Zone 2 will be assumed for all structures.

The cost basis and assumptions used by RMP in this Account and Accounts 23, 24 and 25 are as follows:

1. Major equipment costs are based on vendor quotations or on historical data for similar equipment. Quotations were received on the steam turbine-generator, condenser, heat exchangers, cooling tower and pumps, and other major mechanical equipment. Quotations for major electrical equipment and building services equipment were also received.
2. Concrete quantities were developed from takeoffs of the conceptual design drawings. Electrical and piping quantities were estimated from the single-line diagram, flow diagrams, and building layouts.
3. Pricing of bulk materials is based on the Kansas City, Missouri, area escalated to 1 August 1980, the baseline date of this cost estimate.
4. The labor rates and fringe benefits for each craft were compiled from the union wage rates for the Kansas City, Missouri, area (see Table 22-7). These rates are effective on 1 September 1980, the date by which craft contracts for 1980 will be renewed. The escalated craft labor rates and fringe benefit amounts for health and welfare, vacation, pension, apprentice training and other fringes, plus percentage allowance for Federal and State payroll taxes, employer-paid portion of the Social Security tax, and Workers Compensation, are compiled and summed to develop a total labor rate for each craft (see Table 22-8). The total labor rate for each craft and the Parsons standard composite crew mix breakdown for each class of work (as defined by the account codes used in the estimate) were used to develop a composite labor rate for each account code work classification (see Table 22-9). These crew mix composite labor rates were used in the estimate to determine the estimated labor costs.
5. The overall labor productivity factor used in this study results from an evaluation of the various factors affecting the productivity

* Uniform building code; see Appendix D for details.

Table 22-7 - Craftsman Information

PARSONS CONSTRUCTORS INC

CRAFTSMEN'S INFORMATION

BY M. D'Antuono/G. L. Stalter

DATE July 14, 1980

JOB NO. 5959-1 "Starfire"

CUSTOMER McDonnell Douglas Astronautics

LOCATION Kansas City, Missouri

LEGEND: E = ESTIMATED
– = NOT REQUIRED AND/OR NONE

NOTE: FORM MUST BE FILLED OUT COMPLETELY

			BOILERMAKERS	BRICKLAYERS	CARPENTERS	ELECTRICIANS	LABORERS	INSULATORS	OPERATING ENGINEERS	MILLWRIGHTS	PAINTERS	PIPEFITTERS	REINFORCING RODMEN	IRONWORKERS	TEAMSTERS	SHEET METAL WORKERS	CEMENT MASONS
JOURNEYMEN'S RATE	RATE PER HOUR AS OF:		13.62	12.59	12.80	12.77	10.25	13.27	12.85	12.80	12.19	14.54	12.35	12.35	11.77	12.78	12.675
	INCREASES IN CONTRACT 1	DATE	7/19/80	4/1/81			4/1/81									6/30/81	
		AMOUNT		+1.45			10.95									13.91	
	2	DATE		4/1/82			4/1/82										
		AMOUNT		+1.55			11.97										
	3	DATE															
		AMOUNT															
	DATE PRESENT CONTRACT EXPIRES		7/19/81	3/31/81	3/31/81	8/31/80	4/1/83	10/14/80	4/1/82	3/31/81	3/31/81	5/31/81	3/31/81	3/31/81	4/1/83	6/30/83	4/1/83
	ESTIMATED ESCALATION AT EXPIRATION OF PRESENT CONTRACT	DATE															
		AMOUNT				14.04											
FOREMEN'S DIFFERENTIAL	ASSISTANT FOREMAN		14.62														
	FOREMAN		15.12		+1.00	+1.00	11.05	+ .70	13.85	+1.00	+ .50	15.54	+1.00	+1.00		+ 1.30	+ .25
	NUMBER OF MEN PER FOREMAN											area16.54					
	GENERAL FOREMAN		15.62	+1.00	+2.00	+2.00		+1.25		+2.00		17.54			12.145		
	NO OF FOREMEN PER GENERAL FOREMAN																
OVERTIME PROVISIONS	MONDAY THRU SATURDAY		DB	1-1/2	1-1/2	1-1/2	1-1/2	DB	1-1/2	1-1/2	1-1/2	DB	DB	DB	1-1/2	DB	1-1/2
	SUNDAY AND HOLIDAY		DB	DB	DB	DB	1-1/2	DB	DB	DB	DB	DB	DB	DB	DB	DB	DB
WORKDAY HOURS																	
SHIFT WORK DIFFERENTIAL	SECOND																
	THIRD																
SHOW-UP TIME																	
TRAVEL TIME AND MILEAGE			17/mile 40 miles														
TRAVEL AT START AND FINISH			30-50mi 6.00/day 16.00day over 50														
DAILY TRAVEL EXPENSE																	
SUBSISTENCE PAYMENT			/day30-50 16/dayover 50 miles														
WELFARE AND BENEFITS	HEALTH AND WELFARE		1.375	.95	.60	.69	.60	.80	.85	.60	.55	.72	.80	.80	1.00	.75	.80
	PENSION		1.10	.35	.50	.70	.60	1.40 Spl..15	1.15	.50	.70	UA .55 Pl1.05	1.50	1.50	1.25	1.32	.70
	VACATION		.25	(1.50)	--	.70	1.00	(8%grswgs)	1.05	--		(10%grswgs)	1.00		--	(1.00)	
	APPRENTICESHIP		.05	--	.07	.12	.10	SE .05 Spcs..10	.15	.07	.10	.10	PRM.05	Prm .05		SE .10	.125
						Hldy.25 NEBR 401k	Sp.ds .25 Secf.fund .10		SU .25			SF .10 TE .10			TF .05 SupDe.25	UC .05 UA .15 Pfty.07	
	INCREASES IN CONTRACT 1	HEALTH AND WELFARE				NEIB.1338 .07											
		PENSION				.07	1.00										
		VACATION				.07	1.05										
		APPRENTICESHIP				.01											
						Hldy .02 NEBF .05											
	2	HEALTH AND WELFARE					.75										
		PENSION															
		VACATION															
		APPRENTICESHIP															
	ESTIMATED ESCALATION AT EXPIRATION OF CONTRACT 3	HEALTH AND WELFARE															
		PENSION															
		VACATION															
		APPRENTICESHIP															
AVAILABILITY																	
PRODUCTIVITY RELATED TO																	
UNION	JURISDICTION																
	LOCAL NO.		#83	#4	Dist.Cncl	#124	#662	#27	#101	Dist.Cncl	#3	#533	#10	#10	#541	#2	#318
	LOCATION		KC	KC	KC	KC	KC	Raytown	KC	KC	KC	KC	KC	KC	KC	KC	KC
BUSINESS AGENT ADDRESS & TELEPHONE			861---- 523 0848	231 3596	931 3414	942 7500	444 0062	353 3607	361 0880	931 3414	921 2440	756 0533	842 8917	842 8917	921 1700	531 8021	333 2380

DL 101 (1/8)

Table 22-8 - Craft Composite - Labor Rate Compilation

Craft	Base Rate 9/1/80 ($)	Travel Allowance ($)	Health & Welfare ($)	Pension & Vacation ($)	Apprenticeship ($)	Other Fringes ($)	Subtotal (base + fringes) ($)	Federal Unemployment Tax 0.7% ($)	State Employment Tax 3.6% ($)	Social Security Tax, Employer Only 6.13% ($)	Workman's Compensation ($)	Total Gross Rate/MH ($)
Boiler Maker	14.85	-	1.50	1.47	0.05	-	17.87	0.10	0.53	0.91	0.91	20.32
Brick Layer	12.59	-	0.95	0.35	-	-	13.89	0.09	0.45	0.77	0.47	15.67
Carpenter	12.80	-	0.60	0.50	0.07	-	13.97	0.09	0.46	0.78	0.55	15.85
Cement Mason	12.68	-	0.80	0.70	0.13	-	14.31	0.10	0.52	0.88	0.53	16.34
Electrician	14.04	-	0.76	1.54	0.13	0.85	17.32	0.10	0.51	0.86	0.36	19.15
Iron Worker	12.35	-	0.80	2.50	0.05	-	15.70	0.09	0.44	0.76	1.79	18.78
Insulators	13.27	-	0.80	2.61	0.05	0.10	16.83	0.09	0.48	0.81	0.69	18.90
Laborer	10.25	-	0.60	1.60	0.10	0.35	12.90	0.07	0.37	0.63	1.47	15.44
Operating Engr	12.85	-	0.85	2.20	0.15	0.25	16.30	0.09	0.46	0.79	0.82	18.46
Painter	12.19	-	0.55	0.70	0.10	-	13.54	0.09	0.44	0.75	0.47	15.29
Pipe Fitter	14.54	-	0.72	3.05	0.10	0.20	18.61	0.10	0.52	0.89	0.60	20.72
Rodman	12.35	-	0.80	2.50	0.05	-	15.70	0.09	0.44	0.76	0.79	17.78
Sheet Metal Wkr	13.91	-	0.75	1.32	0.15	0.44	16.57	0.10	0.50	0.85	0.53	18.55
Teamster	11.77	-	1.00	1.25	-	0.30	14.32	0.10	0.52	0.88	0.72	16.54
Millwright	12.80	-	0.60	0.50	0.07	-	13.97	0.09	0.46	0.78	0.50	15.80

Table 22-9 - Account Codes for Composite Crew Mix Labor Rates

Page 1 of 5
Job # 5959-1
Effective From 9/1/80 To
Estimator WEP
Source of Information PARSON CONSTR. & INSUR. Dept.
Date 7/15/80

RMP

THE RALPH M. PARSONS COMPANY
COMPOSITE LABOR RATES

CODE	CRAFT		BOILER-MAKER	CARPEN-TER	ELECT-RICIAN	LABORER	INSUL-ATOR	OPER. ENG.	MILL-WRIGHT	PAINTER	PIPE-FITTER	RODMAN	IRON WORKER	TEAMSTER	CEMENT MASON		TOTAL	FOREMAN ALLOW.	COMP. RATE
	HOURLY RATE		20.32	15.85	19.15	15.44	18.96	18.56	15.80	15.29	20.72	17.78	18.78	16.54	16.34				
	APPLICATION																		
0100	Power Generator and	%			20			5	60		15								
	Drivers	$			3.83			.93	9.48		3.11						17.35	X1.020=	17.70
0200	Electrical Equipment	%			100														
		$			19.15												19.15	X1.020=	19.53
0500	Process Feeders	%		5		5		5	20		10		55						
		$		.79		.77		.93	3.16		2.07		10.33				18.05	X1.020=	18.41
0600	Control Panels and	%			60						40								
	Computers	$			11.49						8.29						19.78	X1.020=	20.18
0700	Nuclear Fuel Handling	%			15			15	70										
	Equipment	$			2.87			2.78	11.06								16.71	X1.015=	16.96
0800	Packaged Plants	%																	
		$																	
0900	Samplers and Analyzers	%						10			80		10						
		$						1.86			16.58		1.88				20.32	X1.020=	20.73
1000	Hoists and Cranes	%						20	60				20						
		$						3.71	9.48				3.76				16.95	X1.015=	17.20
1100	Columns	%	85					15											
		$	17.27					2.78									20.05	X1.015=	20.35
1200	Vessels	%	70					15			15								
		$	14.22					2.78			3.11						20.11	X1.015=	20.41
1300	Heat Exchangers,	%	10					20			70								
	Shell/Tube	$	2.03					3.71			14.50						20.24	X1.015=	20.54
1300	Heat Exchangers,	%	25		5			10	10		30		20						
	Air Cooled	$	5.08		.96			1.86	1.58		6.22		3.76				19.46	X1.015=	19.75
1400	Furnaces and Heaters,	%	50	3		2		10			25		10						
	Field Fabricated	$	10.16	.48		.31		1.86			5.18		1.88				19.87	X1.015=	20.17
1400	Furnaces and Heaters,	%	75					10			15								
	Packaged	$	15.24					1.86			3.11						20.21	X1.015=	20.51
1500	Pumps and Drivers	%						5	80		15								
		$						.93	12.64		3.11						16.68	X1.015=	16.93
1600	Boilers,	%	65					10			25								
	Field Fabricated	$	13.21					1.86			5.18						20.25	X1.015=	20.55

CES-910-3

Table 22-9 (contd)

Job # 5959-1
Effective From 8/1/80 To
Estimator WEP
Source of Information P.C. July 14th 1980
Date 7/21/80

RMP

THE RALPH M. PARSONS COMPANY
COMPOSITE LABOR RATES

CODE	CRAFT		BOILER-MAKER	CARPEN-TER	ELECT-RICIAN	LABORER	INSUL-ATOR	OPER. ENG.	MILL-WRIGHT	PAINTER	PIPE-FITTER	RODMAN	IRON WORKER	TEAMSTER	CEMENT MASON		TOTAL	FOREMAN ALLOW.	COMP. RATE
	HOURLY RATE		20.32	15.85	19.15	15.44	18.90	18.56	15.80	15.29	20.72	17.78	18.78	16.54	16.34				
	APPLICATION																		
1600	Boilers,	%	25					10			65								
	Packaged	$	5.08					1.86			13.47						20.41	X1.015=	20.72
1700	Cooling Towers	%																	
		$																	
1800	Compressors and Blowers	%			5			5	70		15		5						
		$			.96			.93	11.06		3.11		.94				17.00	X1.020=	17.34
1900	Storage Tanks and	%	80					20											
	Spheres	$	16.26					3.71									19.97	X1.015=	20.27
2000	Materials Handling	%			5			15	65				15						
	Equipment	$			.96			2.78	10.27				2.82				16.83	X1.015=	17.08
2100	Reduction Equipment	%	20		5			10	65										
		$	4.06		.96			1.86	10.27								17.15	X1.020=	17.49
2200	Separation Equipment	%			5			10	35		50								
		$			.96			1.86	5.53		10.36						18.71	X1.020=	19.08
2300	Concentration	%			5			10	35		50								
	Equipment	$			.96			1.86	5.53		10.36						18.71	X1.020=	19.08
2400	Agitators, Mixers and	%	35		5			10	50										
	Blenders	$	7.11		.96			1.86	7.90								17.83	X1.020=	18.19
2500	Reactors (All Types)	%	80					15			5								
		$	16.26					2.78			1.04						20.08	X1.015=	20.38
2600	Hoppers, Bins, Chutes	%	70					10			10		10						
	and Silos	$	14.22					1.86			2.07		1.88				20.03	X1.020=	20.43
2700	Classification and	%	15					15	70										
	Screening Equip.	$	3.05					2.78	11.06								16.89	X1.020=	17.23
2800	Other Major Equipment	%						10	40		50								
		$						1.86	6.32		10.36						17.54	X1.020=	17.89
2900	Environment and Proc.	%	55		5	5		10	10		15								
	Vent Equipment	$	11.18		.96	.77		1.86	1.58		3.11						19.46	X1.015=	19.75
3000	Rod and Ball Handling	%			5			10	60				25						
	Equipment	$			.96			1.86	9.48				4.70				17.00	X1.015=	17.26
3100	Flotation Equipment	%	50					10	25				15						
		$	10.16					1.86	3.95				2.82				18.79	X1.020=	19.17

CES-910-3

Table 22-9 (contd)

Job # 5951-1
Effective From 9/1/80 To
Estimator WEP
Source of Information
Date 7/21/80

RMP

THE RALPH M. PARSONS COMPANY
COMPOSITE LABOR RATES

CODE	CRAFT		BOILER-MAKER	CARPEN-TER	ELECT-RICIAN	LABORER	INSUL-ATOR	OPER. ENG.	MILL-WRIGHT	PAINTER	PIPE-FITTER	RODMAN	IRON WORKER	TEAMSTER	CEMENT MASON		TOTAL	FOREMAN ALLOW.	COMP. RATE
	HOURLY RATE		20.32	15.85	19.15	15.44	18.90	18.56	15.80	15.29	20.72	17.78	18.78	16.54	16.34				
	APPLICATION																		
3200	Launders and Sumps	%	60					10			20		10						
		$	12.19					1.86			4.14		1.88				20.07	X1.020=	20.47
3300	Thickeners, Thickening	%	55					10	15		20								
	Mech.	$	11.18					1.86	2.37		4.14						19.55	X1.020=	19.94
3400	Roasters, Ovens	%	70					10	10		10								
	Dryers and Kilns	$	14.22					1.86	1.58		2.07						19.73	X1.020=	20.12
3500	Loading and Unloading	%			5	5		30	10				50						
	Equipment	$			.96	.77		5.57	1.58				9.39				18.27	X1.020=	18.64
3600	Transfer Equipment and	%						20	30				50						
	Rolling Stock	$						3.71	4.74				9.39				17.84	X1.015=	18.11
3700	Mobile Mining Equip.	%						40					60						
		$						7.42					11.27				18.69	X1.020=	19.06
3800	Weighing and Packaging	%						10	75				15						
	Equipment	$						1.86	11.85				2.82				16.53	X1.020=	16.86
3900	Maint. Shop, Garage	%		5		10		10	25				50						
	and Lab Equipment	$		.79		1.54		1.86	3.95				9.39				17.53	X1.020=	17.88
4100	Concrete Foundations	%		40		50		5							5				
	(w/o Rebar)	$		6.34		7.72		.93							.93		15.92	X1.015=	16.16
4100	Concrete Foundations	%		35		40		5				15			5				
	(w/Rebar)	$		5.55		6.18		.93				2.67			.93		16.26	X1.015=	16.50
4100	Concrete Structures	%		50		35		10							5				
	(w/o Rebar)	$		7.93		5.40		1.86							.93		16.12	X1.020=	16.44
4100	Concrete Structures	%		40		30		10				15			5				
	(w/Rebar)	$		6.34		4.63		1.86				2.67			.93		16.43	X1.020=	16.76
4200	Pipe, Valves and	%		5		5		5			85								
	Fittings-Abovegrd	$		.79		.77		.93			17.61						20.1	X1.020=	20.50
4300	Structural Steel	%	15	3		2		10			5		65						
		$		3.05		.31		1.86			1.04		12.21				18.47	X1.015=	18.74
4400	Instruments and	%		3		2					95								
	Controls	$		.48		.31					19.68						20.47	X1.020=	20.88
4500	Painting	%								100									
		$								15.29							15.29	X1.020=	15.60

CES-910-3

Table 22-9 (contd)

Job # 5959-1
Effective From 9/1/80 To
Estimator WEP
Source of Information
Date

RMP

THE RALPH M. PARSONS COMPANY
COMPOSITE LABOR RATES

CODE	CRAFT		BOILER-MAKER	CARPEN-TER	ELECT-RICIAN	LABORER	INSUL-ATOR	OPER. ENG.	MILL-WRIGHT	PAINTER	PIPE-FITTER	RODMAN	IRON WORKER	TEAMSTER	CEMENT MASON		TOTAL	FOREMAN ALLOW.	COMP. RATE
	HOURLY RATE		20.32	15.85	19.15	15.44	18.90	18.56	15.80	15.29	20.72	17.78	18.78	16.54	16.34				
	APPLICATION																		
4600	Electrical	%			100														
		$			19.15												19.15	X1.020=	19.53
4700	Insulation	%					100												
		$					18.90										18.90	X1.020=	19.28
4800	Roads, Parking, Paving	%				70		30											
	Railroad, Fencing	$				10.81		5.57									16.38	X1.020=	16.71
4900	Buildings	%		20		20		10					50						
		$		3.17		3.09		1.86					9.39				17.51	X1.020=	17.86
5000	Building, Components	%																	
	and Fixtures	$																	17.86
5100	Large Specialty	%																	
	Structures	$																	17.86
5200	Pipe, Valves and	%				35		10			55								
	Fittings-Undergrd	$				5.40		1.86			11.40						18.66	X1.020=	19.03
5300	Other Civil Work	%																	
	(Dams, Etc.)	$																	
6200	Operating Materials	%	40			20		30						10					
		$	8.13			3.09		5.57						1.65			18.44	X1.020=	18.81
6300	Site Preparation	%				5		95											
		$				.77		17.63									18.40	X1.020=	18.77
6500	Start-up Services	%				10		5	35		50								
		$				1.54		.92	5.53		10.36						18.35	X1.020=	18.72
6800	Non-Productive Time	%	18	4	6	8	2	14	18	2	18		10						
		$	3.66	.63	1.15	1.24	.38	2.60	2.84	.31	3.73		1.88				18.42	X1.020=	18.79
7100	Temporary Construction	%		30		35		15			10		5	5					
		$		4.76		5.40		2.78			2.07		.94	.83			16.78	X1.020=	17.12
7200	Offsite Storage	%				15		20			15		35	15					
		$				2.32		3.71			3.11		6.57	2.48			18.19	X1.020=	18.55
7300	Unallocable Labor-	%				15		20			15		20	30					
	Craft	$				2.32		3.71			3.11		3.76	4.96			17.86	X1.020=	18.22

CES-910-3

Table 22-9 (contd)

Job # 5959-1
Effective From 9/1/80 To
Estimator WEP
Source of Information
Date 7/21/80

RMP

THE RALPH M. PARSONS COMPANY
COMPOSITE LABOR RATES

CODE	CRAFT		BOILER-MAKER	CARPEN-TER	ELECT-RICIAN	LABORER	INSUL-ATOR	OPER. ENG.	MILL-WRIGHT	PAINTER	PIPE-FITTER	RODMAN	IRON WORKER	TEAMSTER	CEMENT MASON		TOTAL	FOREMAN ALLOW.	COMP. RATE
	HOURLY RATE		20.32	15.85	19.15	15.44	18.90	18.56	15.80	15.29	20.72	17.78	18.78	16.54	16.34				
	APPLICATION																		
8300	Construction Equipment	%						100											
	and Servicing	$						18.56									18.56	X1.020=	18.93
8600	Subsistence & Lodging-	%		15	15	50					15			5					
	Craft	$		2.38	2.87	7.72					3.11			.83			16.91	X1.020=	17.25

CES-910-3

of labor, such as project site, working conditions, quality, and availability of labor. This evaluation reflects recent experience at approximately 20 large nuclear facility construction sites where productivity has varied from 30 to 50%. The value used in this study is 50%. Productivity associated with the construction of nuclear facilities has been steadily decreasing over the past two decades. However, it is felt that fusion has the opportunity and the requirement to pioneer new construction techniques, products and assembly procedures to lower the required manhours and enhance the associated labor productivity.

6. The contingency allowance is to cover unknown costs and conditions, such as weather, labor problems, lack of firm pricing and the state of the design package (conceptual). An amount of 15% of the total cost was allocated for the contingency. A spare parts allowance was set at 2% of the subcontract and materials costs.

The direct cost for the Structures and Site Facilities is $346.58 M. This represents a very significant portion of the total facility cost and is higher than that for a comparably rated PWR. However the cost increases can be identified and are reasonble. The Reactor Building is much larger than a PWR containment building but contains more equipment. The remote handling features in the Reactor and Hot cell contributes to the size and cost increase. The Fuel Handling and Storage (Tritium Reprocessing) Building is an additive factor as is the handling and containment of tritium. In fact, the premise that this facility should have very low release rates of tritium, low material activiation and a very high factor of safety, greatly impacted the overall facility cost. The Hot Cell is another facility which is additive to a PWR system. Because of the large sizes of the components and large number of components handled within the Hot Cell, a large building is required.

$$C_{21} = \$346.58 \text{ M}$$

22.5.2.1 Site Improvements and Facilities (Acct 21.01)

This account covers all the site improvements and facilities necessary for the complete power plant. Section 20.3 discusses the design details of the necessary site improvements and transportation access requirements. Table 22-10 summarizes the determined direct costs for this area.

$$C_{21.01} = 11.15 \text{ M}$$

Table 22-10. Site Improvements and Facilities Costs

Category	Costs ($M)
General Site Improvements	
Site Work, Fencing, Storm Sewer	4.03
Earth Moving Equipment	3.33
Tank and Pump Foundations	0.66
Fire Protection	0.87
Sanitary Sewer	0.29
Transportation Access	
Highway (5 miles)	0.81
Railway (5 miles)	1.16
Total Site Improvements and Facilities, $C_{21.01}$ = $11.15 M	

22.5.2.2 Reactor Building (Acct 21.02)

The Reactor Building is a steel-lined ribbed box structure that contains the reactor heat transport system, ATRS and the rf plasma heating system. The building is rectangular in shape, 120 m x 50 m x 42.5 m high and is described in detail in Sec. 20.2. Key features of the building which influence the cost are:

- Building shape and size - 120 m x 50 m x 42.5 m
- Steel lined pressure and tritium boundary
- Remote maintenance provisions
- A 1.5 m thick shielding wall and door requirement
- A 24 psi internal design pressure
- All contaminated and potentially contaminated systems are located within the reactor building (larger sized building required)

A relative cost analysis was conducted on the building configuration (arch, ribbed arch, box, and ribbed box) and the ribbed box was chosen as the most cost effective structural shape for the reactor building. For further details, see Sec. 20.2.1.2. Table 22-11 lists the elements of the Reactor Building and their respective costs. The total direct cost for the Reactor Building is:

$$C_{21.02} = \$157.44 \text{ M}$$

22.5.2.3 Turbine Building (Acct 21.03)

The turbine building is the largest building of the entire facility in terms of floor area (110 m by 50 m) and contains a single turbine-generator and its auxiliaries. The surface condenser is located on the subgrade level, the feedwater heaters are on the ground level and the turbine generator is on the upper level. The building is described in Sec. 20.2.2. The steel framed, truss roofed building is of a conventional construction consistent with current power plant installations. The elements of the Turbine Building are shown in Table 22-12 with the total direct cost being:

$$C_{21.03} = \$35.92 \text{ M}$$

22.5.2.4 Cooling System Structures (Acct 21.04)

The main cost element in this account is the circulating water system. Also included in this account are the costs associated with intake and discharge structures and conduits and the earthwork for the cooling towers. Specific items considered are:

- Circulating and makeup water pump pits
- Fire water storage tank w/epoxy liner
- Evaporation pond
- Reservoir

The total direct cost for this sysem is $7.96 M with concrete and piping being the dominant factors.

$$C_{21.04} = \$7.96 \text{ M}$$

Table 22-11. Reactor Building Costs

Category	Cost ($M)	
Structural		148.15
Earthwork Including Dewatering	5.06	
Substructure up to grade	54.03	
- Concrete		
- Reinforcing		
- Concrete tunnels		
- Reinforcing for tunnels		
- Painting		
Superstructure	59.22	
- Concrete		
- Reinforcing		
- Structural Steel		
- Painting		
- Railroad Track in Building		
Special Shielding and Airlocks	29.84	
- Steel Liner		
- Air Locks		
- Leak Test		
- Construction Openings		
- Penetrations		
Building Services		1.89
HVAC	1.50	
Plumbing	0.02	
Fire Protection	0.37	
Architectural		7.40
Interior and Exterior Finishes	1.79	
Shield Door	5.52	
Elevator	0.09	
Total Reactor Building Cost, $C_{21.02}$ =		$157.44 M

Table 22-12. Turbine Building Costs

Category	Cost ($M)	
Structural		32.65
Earthwork Including Dewatering	2.21	
Substructure up to grade	19.58	
- Concrete		
- Reinforcing		
- Structural Steel		
- Painting		
Superstructure	10.86	
- Concrete		
- Reinforcing		
- Structural Steel		
- Painting		
Building Services		1.78
HVAC	1.68	
Plumbing	-	
Fire Protection	0.10	
Architectural		1.49
Interior and Exterior Finishes	1.49	
Total Turbine Building Costs, $C_{21.03}$ =		$35.92 M

22.5.2.5 Electrical Equipment and RF Power Supply Building (Acct. 21.05)

The Electrical Equipment and RF Power Supply Building is a three level, steel framed structure, 70 m x 50 m x 16 m high. It houses power supplies for the EF, OH and TF coils, a cable spreading area and the power supplies for the RF Heating and Current Drive System. Also included is a small maintenance, repair and storage area and a small office and control room for the electrical equipment. The ECRH gyrotron power supply substation is located externally in an equipment yard. A further description can be found in Sec. 20.2.6. The total direct cost of $9.16M is detailed in Table 22-13.

$$C_{21.05} = \$9.16 \text{ M}$$

Table 22-13. Electrical Equipment and Power Supply Building Costs

Category	Cost ($M)	
Structural		8.03
Earthwork Including Dewatering	0.07	
Substructure	3.58	
- Concrete		
- Reinforcing		
Superstructure	4.38	
- Concrete		
- Reinforcing		
- Structural Steel		
- Painting		
Building Services		0.53
HVAC	0.37	
Plumbing	0.02	
Fire Protection	0.14	
Architectural		0.60
Interior and Exterior Finishes	0.54	
Elevator	0.06	

Total Electrical Equipment and Power Supply Building, $C_{21.05}$ = $9.16 M

22.5.2.6 Plant Auxiliary Systems Building (Acct 21.06)

This two level building houses the HX and pumps for the closed loop cooling water system. Also located on the ground level are chillers, pumps, instrument air equipment and a maintenance area. The upper level contains air handling units pumps, plenums and HVAC equipment. Table 22-14 summarize the direct costs of this system.

$$C_{21.06} = \$3.26 \text{ M}$$

Table 22-14. Plant Auxiliary Systems Building Costs

Category		Cost ($M)
Structural		1.54
Earthwork Including Dewatering	0.04	
Substructure	1.50	
Building Services		1.39
HVAC	1.31	
Plumbing	0.01	
Fire Protection	0.07	
Architectural		0.33
Total Plant Auxiliary Systems Building Costs, $C_{21.06}$	=	$3.26 M

22.5.2.7 Hot Cell Building (Acct 21.07)

The Hot Cell Building for STARFIRE is the second most expensive building in the facility and this, in some ways is a reflection upon the design, safety and maintenance approach taken and to the high level of detail involving the hot cell operations. The safety aspects require a carbon steel lined, concrete-hardened structure designed for DBE* seismic loading. The 1.5 m thick external walls will withstand tornado and turbine missiles, tornado induced differential pressures and provide adequate shielding for the activated products handled and stored in the Hot Cell.

A wide variety of maintenance and decontamination functions are being accomplished within the Hot Cell, all in a remote operations mode. The

* Design basis earthquake; see Sec. 20.2.1.2.

activated blanket sectors are transported into the Hot Cell on a monorail system for inspection, disassembly and storage. All solid and liquid waste products are processed in the Hot Cell and either shipped offsite or stored. Also included in the Hot Cell are remote maintenance and repair shops to work on blanket sectors and other activated reactor equipment. This building as well as the Reactor Building has Atmospheric Tritium Recovery Units to cleanup tritium in the event of a leak.

In many ways the Hot Cell is very similar to the Reactor Building (shielding, pressure rating, seismic, and remote maintenance) and hence it is understandable that the cost for this building is quite high. Table 22-15 shows the cost of the building. The two highest elements are concrete and liner which total approximately 75% of the total cost.

$$C_{21.07} = \$53.69 \text{ M}$$

Table 22-15. Hot Cell Building Costs

Category	Cost ($M)	
Structural		43.96
Earthwork Including Dewatering	0.13	
Concrete	18.81	
Reinforcing	3.60	
Liner Plate and Misc Steel	3.88	
Liner Tests and Airlock	17.30	
Painting	0.24	
Building Services		1.15
HVAC	1.09	
Plumbing	-	
Fire Protection	0.06	
Architectural		8.58
Interior and Exterior	1.52	
Shield Door	7.06	
Total Hot Cell Building Costs, $C_{21.07}$	= $53.69 M	

22.5.2.8 Reactor Service Building (Acct 21.08)

The Reactor Service Building is a ground-level high-bay area between the Hot Cell and the Turbine Building and adjacent to the Plant Auxiliary Building. The building is a steel framed building with concrete floors supported on steel framing. A railroad spur passes through the receiving end of the building. Storage spaces for new blanket segments and process modules are provided. Table 22-16 lists the elements of the building and their costs. The total direct cost of the building is:

$$C_{21.08} = \$1.88 \text{ M}$$

Table 22-16. Reactor Service Building Costs

Category	Cost ($M)	
Structural		1.54
Earthwork	0.04	
Concrete	0.53	
Reinforcing	0.14	
Structural Steel	0.77	
Painting	0.06	
Building Services		0.10
HVAC	0.05	
Plumbing	0.01	
Fire Protection	0.04	
Architectural		0.24
Total Reactor Service Building Cost, $C_{21.08}$	=	$1.88 M

22.5.2.9 Service Water Building (Pump Houses) (Acct 21.09)

The Service Water Buildings (fire water storage tank pump house) and the circulating water pump house are covered in this account. These pump houses contain the pumps and the chlorinating facilities for these systems. The circulating water pump house is a steel framed structure with a truss roof. The fire water storage tank pump house is a concrete-hardened structure

designed for DBE seismic loading. The direct cost for these buildings are shown in Table 22-17.

$$C_{21.09} = \$0.66 \text{ M}$$

Table 22-17. Service Water Building Costs (Pump Houses)

Category	Cost ($M)	
Structural		0.50
Earthwork	0.002	
Concrete	0.11	
Reinforcing	0.05	
Structural Steel	0.31	
Painting	0.03	
Building Services		0.11
HVAC	0.005	
Plumbing	-	
Fire Protection	0.105	
Architectural		0.05
Total Service Water Building Costs (Pump Houses) $C_{21.09}$ =		$0.66 M

22.5.2.10 Fuel Handling and Storage Building (Acct 21.10)

The Fuel Handling and Storage (FHS) Building also referred to as the Tritium Reprocessing Building, houses the process equipment to reclaim and purify the tritium. Deuterium is also stored in this building and the two fuels are mixed and sent to the reactor. The FHS Building is separated into areas subject to tritium contamination and areas which are not. Areas subject to contamination are carbon steel lined and are within a concrete-hardened structure similiar to the Reactor Building. An airlock separates the contaminated areas from the offices, a tritium equipment control room and HVAC equipment. Again like the Reactor Building, the tritium area requires a lower than atmospheric ambient pressure of clean air. A CO_2 atmosphere is not required in the FHS building. Tritium cleanup of the building atmosphere is provided by the five ATRS* units. In addition to the tritium processing area, sufficient areas are provided for storage of deuterium, maintenance

* Atmospheric tritium recovery system.

and repair shops and a storage room. A uranium storage bed for the tritium is also required. The facilities for this system are costed in Table 22-18. Again the concrete and the steel liner are the highest cost items. The total direct cost for the building is:

$$C_{21.10} = \$8.63 \text{ M}$$

Table 22-18. Fuel Handling and Storage Building Costs

Category		Cost ($M)
Structural		7.25
Earthwork Including Dewatering	0.02	
Concrete	5.33	
Reinforcing	0.72	
Structural Steel	0.03	
Steel liner, plate and airlock	1.12	
Painting	0.03	
Building Services		0.62
HVAC	0.52	
Plumbing	0.03	
Fire Protection	0.07	
Architectural		0.76
Total Fuel Handling and Storage Building Costs, $C_{21.10}$		= $8.63 M

22.5.2.11 Control Room Building (Acct 21.11)

The Control Room is adjacent to the Administration Building and the Site Service Building, but it is a separate two-level hardened structure, capable of withstanding DBE seismic loads and tornado induced pressures and tornado missiles. The lower area houses the main control room, auxiliary equipment, computer equipment maintenance and repair, tools and parts storage, offices, conference rooms and electrical equipment. The upper level contains electrical and HVAC equipment and an observation gallery above the main control room. The cable spreading areas beneath the control room are used with an access flooring system for use with a multiplexed communication system. The

Control Room Building direct cost is $3.10M with a cost breakdown shown in Table 22-19.

$$C_{21.11} = \$3.10 \text{ M}$$

Table 22-19. Control Room Building Costs

Category	Cost ($M)	
Structural		2.05
Earthwork Include Dewatering	0.01	
Concrete	1.63	
Reinforcing	0.35	
Structural Steel	0.05	
Painting	0.01	
Building Services		0.70
HVAC	0.47	
Plumbing	.01	
Fire Protection	0.22	
Architectural		0.35
Total Control Room Building Costs, $C_{21.11}$ =		$3.10 M

22.5.2.12 Onsite AC Power Supply Building (Acct 21.12)

The onsite AC power supply is provided by two gas turbine generators housed in a one story hardened building. Each unit has a control room and battery room. Additional hardening is provided in the walls to stop turbine generated missiles. An adjacent two story building is required for the switchyard control equipment and the cable spreading room. The foundations are designed to meet the gas turbine manufacturer vibration specifications. The total direct cost of $2.05 M is shown in Table 22-20.

$$C_{21.12} = \$2.05 \text{ M}$$

Table 22-20. Onsite AC Power Supply Building Costs

Category	Cost ($M)	
Structural		1.14
Earthwork	0.02	
Concrete	0.80	
Reinforcing	0.24	
Structural Steel	0.08	
Building Services		0.57
HVAC	0.10	
Plumbing	0.01	
Fire Protection	0.46	
Architectural		0.34
Total On-Site Power Supply Building Costs, $C_{21.12}$	=	$2.05 M

22.5.2.13 Administration Building (Acct 21.13)

The Administration Building is a two story structure designed to support up to 60 people. It consists of a reception area, conference/display room, offices, lunchroom, electrical and HVAC equipment for both this building and the Site Service Building. It is a steel framed structure with a supported floor of concrete resting on a steel decking. Table 22-21 shows the total cost to be $0.87 M.

$$C_{21.13} = \$0.87 \text{ M}$$

22.5.2.14 Site Service Building (Acct 21.14)

This building is divided into a maintenance shop and a warehouse, both servicing the balance of plant functions. The building is combined with the Administration and the Control Room Buildings and share some building services. The total building costs are $0.87 M and is shown in Table 22-22.

$$C_{21.14} = \$0.87 \text{ M}$$

Table 22-21. Administration Building Costs

Category		Cost ($M)
Structural		0.47
Earthwork	0.01	
Concrete	0.18	
Reinforcing	0.04	
Structural Steel	0.24	
Building Services		0.13
HVAC	0.09	
Plumbing	0.02	
Fire Protection	0.02	
Architectural		0.27
Total Administration Building Costs, $C_{21.13}$	=	$0.87 M

Table 22-22. Site Service Building Costs

Category		Cost ($M)
Structural		0.46
Earthwork	0.02	
Concrete	0.07	
Reinforcing	0.03	
Structural Steel	0.34	
Building Services		0.13
HVAC	0.07	
Plumbing	0.02	
Fire Protection	0.04	
Architectural		0.28
Total Site Service Building Costs, $C_{21.14}$	=	$0.87 M

22.5.2.15 Cryogenics Building (Acct 21.15)

This steel framed structure with precast concrete panel walls houses the helium and nitrogen compressors. The remainder of the cryogenics equipment is located in a fenced-in yard adjacent to the building. An enclosed mezzanine provides space for an electrical equipment room. This building costs $0.91 M and details are shown in Table 22-23.

$$C_{21.15} = \$0.91 \text{ M}$$

Table 22-23. Cryogenics Building Costs

Category	Cost ($M)	
Structural		0.70
Earthwork	0.01	
Concrete	0.52	
Reinforcing	0.16	
Structural Steel	0.01	
Building Services		0.04
HVAC	0.02	
Plumbing	-	
Fire Protection	0.02	
Architectural		0.17
Total Cryogenics Building Costs, $C_{21.15}$	=	$0.91M

22.5.2.16 Security Building (Acct 21.16)

The Security Building is a single-level steel framed structure similar to the Administration Building. The total cost of this building is $0.31 M. Details are shown in Table 22-24.

$$C_{21.16} = \$0.31 \text{ M}$$

Table 22-24. Security Building Costs

Category		Cost ($M)
Structural		0.18
Earthwork	0.00	
Concrete	0.09	
Reinforcing	0.02	
Structural Steel	0.07	
Building Services		0.05
HVAC	0.038	
Plumbing	0.006	
Fire Protection	0.006	
Architectural		0.08
Total Security Building Costs, $C_{21.15}$		= $0.31 M

22.5.2.17 Ventilation Stack (Acct 21.17)

The Ventilation Stack provides for disposal of low level radioactive gases above ground level. It is a steel-lined, reinforced concrete outer shell structure, 100 m high and 14 m in diameter at the base. The concrete shell is slip-formed and is supported on an octagonal foundation. The cost for this stack is shown in Table 22-25 and the total direct cost is $1.81 M.

$$C_{21.17} = \$1.81 \text{ M}$$

Table 22-25. Ventilation Stack Costs

Category		Cost ($M)
Structural		1.81
Earthwork	0.01	
Concrete	0.37	
Reinforcing	0.20	
Structural Steel	1.23	
Total Ventilation Stack Costs, $C_{21.17}$		= $1.81 M

22.5.3 Reactor Plant Equipment (Acct 22)

This account summarizes all of the fusion reactor plant equipment, which sometimes is referred to as the nuclear island portion of the facility costs. The systems contained herein are either uniquely designed for the fusion application or have been tailored to accommodate the fusion systems. The R&D costs of these systems are not included because, by definition, STARFIRE represents a developed and mature system. Due to the difficult task of producing energy by fusion, the reactor portion of this facility is the most expensive part of the overall system, costing in excess of 50% of the total direct cost. The cost of the Reactor Plant equipment is

$$C_{22} = \$968.62 \text{ M}$$

22.5.3.1 Blanket and First Wall (Acct 22.01.01)

The costs in this account covers the components of the first wall, the blanket (including the breeder, reflector, multiplier and jackets), headers and any integral structure to support and transport the blanket sectors. Other components, which may be an integral part of the blanket sector, are covered in other accounts to differentiate their functional usage. Examples include the rf grill and duct extension (Account 22.01.04), the ECRH Plasma Breakdown waveguides (Account 22.01.09), the fuel injection system (Account 22.05.04) and the limiter (Account 22.01.08).

The costs of the First Wall/Blanket components are estimated based on a cost per weight basis, which is consistent with the degree of design definition. Table 22-26 lists the materials used, their masses and the costs. The largest cost item is the 60% enriched $LiAlO_2$. The stainless steel components are segregated into a complex fabrication category (first wall, and blanket cooling components) and a structural or simple fabrication category (reflector, jacket, coolant headers and blanket support structures). The total first wall/blanket system cost is

$$C_{22.01.01} = \$82.36 \text{ M}$$

22.5.3.2 Shielding (Acct. 22.01.02)

The bulk and penetration shielding is an optimized composite of materials to attenuate the neutron radiation and thermal heating to levels

Table 22-26. First Wall/Blanket Costs

	MATERIAL	MASS (MT)*	INSTALLED COST ($/Kg)	TOTAL COST ($M)
FIRST WALL				
	PCASS	29.0	35	1.02
	Be	1.0	250	.25
BLANKET				
	PCASS	200.7*	35	7.02
	PCASS	191.4**	27	5.17
	Zr_5Pb_3	336.8	50	16.84
	$LiAlO_2$, 60% Enriched	626.5	80	50.12
	C	161.7	12	1.94
		1547.1		82.36

* INBD BKT	20.8 MT	** REFLECTOR	43.9 MT
OUTBD BKT	179.9 MT	JACKET & HEADER	147.5 MT
	200.7 MT		191.4 MT

*Metric ton (1000 KG)

necessary for protection of the surrounding equipment. Table 22-27 lists the principal materials by weight and cost. The costs were calculated on a cost/unit weight basis. The bulk Nonmagne 30 costs reflect thick plates with very little machining costs. The higher cost for Nonmagne 30 ($20/kg) includes the coolant tubes, cladding for the B_4C, the structural elements and pressure jackets. Very little fabrication is considered for Pb, B_4C and W with these being cast or pressed into the required shapes ready for inclusion into the shield module. There had been a concern that the cost of tungsten would be excessive and while the cost is significant, it is not a dominant factor. In fact, Table 22-28 illustrates that the cost of the stainless steel is the highest material cost. The total shielding cost is:

$$C_{22.01.02} = \$186.07 \text{ M}$$

Table 22-27. Shielding Costs

Material	Mass (MT)	Installed Cost ($/Kg)	Total Cost ($M)
Inboard Shield			
Nonmagne 30, Structural	65	20	1.30
Nonmagne 30, Bulk	92	9	0.83
B_4C	88	35	3.08
W	840	50	42.00
	1085		47.21
Outboard Shield and Shield Door			
Nonmagne 30, Structural	360	20	7.20
Nonmagne 30, Bulk	3498	9	31.48
$Ti-^6Al-^4V$	117	65	7.60
TiH_2	1310	2	2.62
B_4C	362	35	12.67
	5647		61.57
Vacuum Duct and Pod			
Nonmagne 30, Structural	582	20	11.64
Nonmagne 30, Bulk	5248	9	47.23
$Ti-^6Al-^4V$	30	65	1.95
TiH_2	336	2	0.67
B_4C	437	35	15.30
	66.33		76.79
RF and ECRH Elbow Ducts			
Nonmagne 30, Bulk	55	9	0.50
Total Shielding Costs, $C_{21.01.02}$		=	186.07

22.5.3.3 Magnets (Acct 22.01.03)

The cost account for the magnets includes the costs for the TF magnets, the EF magnets, the CF magnets and the OH magnets. All the magnet systems are cryogenic except the CF coils. Table 22-29 summarizes all of the material weights and costs. Four OH and four EF coils are contained within the cryogenic centerpost region and no separate vacuum dewar is required. The individual vacuum dewars for the TF coils are considered as structural elements and hence are included in Account 22.01.05, Primary Structure and Support.

The unit costs shown in Table 22-29 are based on the assumption of a mature superconducting magnet industry. All coils are fabricated at factory locations. There, the necessary quality control verifications are performed and the coils are mated to the dewars and shipped by barge to the reactor site. The cost of the TF conductor is shown as a composite cost for the Nb_3Sn and the NbTi superconductors and the copper stabilizer. The cost of the SS structure enclosing the S/C conductor pack is very low at $14/kg reflecting the simple fabrication technique. The helium tank surrounding the coil is a much more complex structure requiring load carrying ability and leak-tight construction. This construction and verification increases the unit cost of the SS to $26/kg. The superinsulation is required only on the individual OH and EF coils and is priced on a per square meter basis. The G-10CR insulator is estimated at a unit price of $20/kg.

Table 22-28. Relative Shield Costs

Material	Percent of Shielding Cost
Nonmagne 30	54
W	22
B_4C	17
$Ti\text{-}^6Al\text{-}^4V$	5
TiH_2	2

With the OH and EF coils, the NbTi conductor and Cu stabilizer are priced separately. Two spare OH and two EF coils are provided for the coils

Table 22-29. Cost of the Magnets

MATERIAL	UNIT COST ($/Kg)	TF (12 COILS) WT (MT)	TF (12 COILS) COST ($M)	EF (8 COILS) WT (MT)	EF (8 COILS) COST ($M)	CF (4 COILS) WT (MT)	CF (4 COILS) COST ($M)	OH (6 COILS) WT (MT)	OH (6 COILS) COST ($M)
Nb3 Sn	109			-	-	-	-	-	-
NB Ti	55	1815.6	61.0	27.3	1.50	-	-	5.7	.31
Copper Stabilizer	16			372.29	5.97	-	-	77.1	1.23
Copper Conductor	25	-	-	-	-	139.5	3.49	-	-
SS Structure	14	2304.0	32.3	387.8	5.43	10.0	0.14	80.2	1.12
SS Helium Tank	26	1124.4	29.2	488.0	12.69	-	-	101.0	2.63
SS Vacuum Dewars	26	(1)	(1)	249.1	6.48	-	-	54.9	1.43
G-10CR Insulator	20	61.2	1.22	72.0	1.44	-	-	15.0	.30
Fiberglass Insulator	13	-	-	74.6	.97	-	-	15.4	.20
Alumina Insulator	25	-	-	-	-	15	0.37	-	-
Superinsulation	$100/m^2$	(1)	(1)	1235 m^2	.12	-	-	272.4 m^2	.03
Circuit Protection	-	-	2.00	-	-	-	-	-	-
			125.72		34.60		4.00		7.25
			(145.49 W/) (Vac. Dewars)						

Total Magnet System Cost, $C_{22.01.03}$ = $171.57 M

(1) Included in Account 22.01.05

trapped under the TF coils and the cost for these are shown in the Spare Parts account.

The dominant magnet system cost is the TF coils system, which has the most stored energy and is the most massive of the systems. The cost of the OH and EF magnet systems are roughly proportional to the current in the coils. The total magnet system cost is:

$$C_{22.01.03} = \$171.57 \text{ M}$$

22.5.3.4 RF Heating and Current Drive (Acct 22.01.04)

The capital costs in this system are attributable to the crossed field amplifiers, the phase shifters, the circulators, and the wave guide components. The total cost of the rf system is $33.49 M, and the detailed breakdown is shown in Table 22-30. The grill and duct extension are to be replaced with each blanket sector replacement, see Account 50. The amplifiers will have a limited life and will have to be replaced on a routine basis, Account 51. The power supplies are covered in Account 22.01.07 and cooling in Account 22.06.07, Closed Coolant System.

$$C_{22.01.04} = \$33.49 \text{ M}$$

Table 22-30. RF Heating and Current Drive System Costs

Component	Unit Cost ($)	Cost ($M)
Crossed Field Amplifier (432)	27,500	11.88
Grill and Duct Extension (12)	95,300	1.14
Waveguide Elbow (12)	230,000	2.76
Below-grade Waveguide (12)	531,000	6.37
Waveguide Window Assembly (36)	15,000	.54
Phase Shifter (432)	13,000	5.62
Circulator (432)	12,000	5.18
Total RF Heater and Current Drive System Cost, $C_{22.01.04}$		= 33.49

Crossed Field Amplifier -- To achieve the high efficiencies required in the rf system, crossed field amplifiers are used at a power level of 420 kW output. Similar tubes have been built at 400 kW, 3 GHz with 10 dB gain. Based upon tubes of similar size and complexity, it is estimated that

this CFA tube would cost in the range of $25,000 to 30,000.[4] This assumes a large quantity purchase with all R&D and tooling costs credited to prior procurements. A cost of $27,500 is estimated for the installed cost of each CFA, yielding a capital cost of $11.880 M for 432 units. The estimated lifetime of this tube would be on the order of 20,000 hours, which would require a replacement every three calendar years. After replacement the CFA's would be returned to the manufacturer for refurbishment.

Grill and Duct Extension -- This portion of the rf waveguide inside the blanket sector and through the shield is an integral part of the replaceable blanket sector. The component is water cooled PCA SS structure with a beryllium coating. The unit cost is assumed to be $95,300 and the total system cost is $1.14 M.

Waveguide Elbow -- This is the portion of the waveguide outside the shield above the floor level, approximately 13 m long. The structure is PCA with a copper coating. The unit cost is $230,000 and the system cost is $2.760 M.

Below-Grade Waveguide -- This is the portion of the waveguide from the reactor room floor level to the circulators/phase shifters. The waveguide structure is water cooled PCA SS with copper coating approximately 30 meters in length. The unit cost is $531,000, resulting in a system cost of $6.37 M.

Waveguide Window Assembly -- These assemblies of 36 individual waveguide windows are used in three locations in each rf duct. Thus 36 assemblies are required, all identical. Similar window assemblies are being made[5] on a smaller scale (4 x 4 array). The larger STARFIRE window assemblies will cost approximately $15,000 each, installed based on an assumption of prior procurements (85% learning curve). The total system cost will be $540,000.

Phase Shifter -- These components are of water cooled copper structure with motorized components to accomplish the required phase matching. Their weight is estimated at 655 kg each and the costs are appraised to be $13,000 each. Since 432 of these assemblies are required, the initial capital cost is $5.62 M.

Circulator -- These components are also large water-cooled copper structures with ferrite cores. The elements should cost approximately $12,000 with a system cost of $5.18 M.

22.5.3.5 Primary Structure and Support (Acct 22.01.05)

The Primary Structure and Support System encompasses all reactor structural elements which support and react the loads generated by the major reactor components. The cryogenic centerpost reacts all the radially inward forces generated by the TF coils. Underneath the cryogenic centerpost are the centerpost support struts. Enclosing the centerpost, the support struts and the inner legs of the TF coils, is the common dewar. The TF coil vacuum dewar transmits the out-of-plane magnetic forces in the TF coils to the anti-torque structure and the carry-through structure. The shield pedestal supports the dead weight of the wall/blanket/shield to the reactor building foundation structure. The equipment structure supports the weight and the magnetic forces associated with the EF and OH coils, both outboard and within the centerpost region.

Table 22-31 lists the principal components, materials, weights and their estimated costs for the primary structure and support system. Most components utilize conventional fabrication techniques with the Nonmagne 30 steel. Although the structure is thick and heavy, there are high loads being transmitted, requiring high quality control. Also, the dewars are complex structures enclosing the cryogenic components and they have to react the large magnetic loads generated by the TF coils. Weld inspection and leak checking will also be time consuming. For these reasons, the installed steel cost per kilogram is estimated at $20/kg. The only exception is the steel in the antitorque structure which is a simple flat structure requiring only machining on the edges of parts and a lower cost of $16/kg is assumed. The multilayer insulation (MLI) enclosing the dewars are also costed in the account on a cost per square meter basis of $\$100/m^2$.[2]

An economic trade study was conducted based on the material choice for the centerpost. Three material choices were considered: Nonmagne 30, graphite-epoxy and G-10CR. For the analysis, equal volumes were assumed to be required for all materials. The unit cost of Nonmagne 30 was assumed to

Table 22-31. Primary Structure and Support Systems Cost

MATERIAL	MASS (MT)*	INSTALLED COST ($/kg)*	TOTAL COST ($K)
Reactor Centerpost			
- G-10CR	279.3	20	5.58
Centerpost Support Struts			
- G-10CR	1.4	20	0.03
Common Dewar			
- Nonmagne 30	69.9	20	1.40
- Superinsulation	$480m^2$	$100/m^2$	0.05
TF Coil Vacuum Dewar			
- Nonmagne 30	974.7	20	19.50
- G-10CR	1.9	20	0.04
- Superinsulation	$2400\ m^2$	$100/m^2$	.24
Anti Torque Structure			
- Nonmagne 30	1050.9	16	16.81
Shield Pedestal			
- Nonmagne 30	418.4	20	8.37
Equipment Support Structure			
- Nonmagne 30	32.2	20	0.64
- G-10CR	4.2	20	0.08
Total Primary Structure and Support System Costs, $C_{22.01.05}$ =			52.74

*Except where indicated.

be $16/kg because of the large structural elements. The cost of graphite epoxy centerpost is estimated based upon usage of a built-up prepreg graphite-epoxy unidirectional tape ($106/kg). This tape is wound on a mandrel until the proper thickness is obtained. The part will be autoclaved to cure. Nondestructive testing will verify the quality of the part. Final machining will finish the outside diameter and end fittings. The overall cost/kg for graphite-epoxy will be $235 including shipping and installation. The method of fabrication for the G-10CR will be very similar to graphite epoxy but the material cost is very low ($3/kg) yielding a unit cost of $20/kg. Table 22-32 shows the material choices, weights and costs with G-10CR being the most cost effective material. The Nonmagne 30 centerpost is also a reasonable alternative. The total system cost is:

$$C_{22.01.05} = \$52.74 \text{ M}$$

Table 22-32. Economic Comparison of Centerpost Materials

Material	Weight (MT)	Unit Cost ($/kg)	Cost ($M)
Nonmagne 30	1179.97	16	18.88
Graphite	223.7	235	52.57
G-10CR	279.3	20	5.58

22.5.3.6 Reactor Vacuum System (Acct 22.01.06)

The components costed in the Reactor Vacuum System will include the forty-eight compound cryogenic pumps for the plasma chamber, the associated valving, the regenerative pumping system for the cryopumps, the magnet vacuum systems and the gyrotron magnet vacuum systems. The vacuum delivery system for STARFIRE consists of a large plenum chamber behind the blanket, limiter/vacuum ducts through the blanket connecting the plasma chamber and the plenum and twenty-four large vacuum ducts connecting the plenum and the vacuum cryopumps. The delivery components, although performing a vacuum system function are all considered to be integral parts of other systems (e.g. the limiter/vacuum duct is an opening in the blanket sector and the vacuum ducts and pods are a part of the shielding system.)

The cryopumps for the plasma chamber require a pumping speed of 125,000 liter/sec, He and 200,000 liter/sec, total. At present it is estimated that in a small lot purchase these pumps would cost $100,000 each, exclusive of development costs. Due to the large purchase quantities involved, significant learning would apply and the unit price will be estimated as $50,000. The large diameter (1.2 m) gate valve with a metal seal is estimated at $20,000 and the similar sized right-angle valve is estimated at $15,000. Although these items would have to be specially developed, the cost estimates reflect production quantity prices. The roughing vacuum pumps and piping for regenerating the cryopanels are estimated at $60,000.

Small cryopumps will be required on each ECRH gyrotron magnet dewar. These 1000 liter/sec H_2 units are commercially available at $3,000 each. A common roughing pump ($7,000) will be shared by all cryopump systems. The TF, EF and OH coils and the common dewars must be evacuated prior to cool-down. Rough vacuum pumping is accomplished by the regeneration system for the plasma chamber. Further pumping is provided by the 4°K TF coil helium vessel. No requirements were identified for the Fuel Handling and Storage System or the Radioactive Waste Products System so no costs are included for those accounts. The total system costs are 4.86 M and the cost breakdown is shown in more detail in Table 22-33.

$$C_{22.01.06} = \$4.86 \text{ M}$$

Table 22-33. Reactor Vacuum System Costs ($M)

Component	Equipment	Installation	Total
Plasma Chamber Cryopumps (48)	2.40	0.24	2.64
Right-angle Valve (48)	0.72	0.04	0.76
Gate Valve (48)	0.96	0.05	1.01
Regeneration System	0.06	0.06	0.12
Gyrotron Magnet Cryopumps (24)	0.07	0.02	0.09
Gyrotron Pipes, Valves, etc.	0.07	0.05	0.12
Gyrotron Roughing Pump	0.01	0.01	0.02
T.F. Rough Pump Piping	0.05	0.05	0.10
Total Reactor Vacuum System Costs, $C_{22.01.06}$			= 4.86

22.5.3.7 Power Supply, Switching and Energy Storage (Acct 22.01.07)

The power supply, switching and energy storage system provides the conditioned power to the magnet coil systems, the rf plasma heating and current drive system and the ECRH plasma breakdown system. Since STARFIRE is operated steady state, most of the requirements for electrical energy storage are eliminated. The system costs are summarized in Table 22-34. The power supply for the TF magnets provides a low voltage, high current supply and is estimated at $80/kW, including component costs, installation and system checkout. The TF protective circuitry is included in the TF magnet costs, Acct. 22.01.03. The EF coil power supplies have a high power requirement (290 MVA) which yields a cost of $23.2 M. The OH coil power supply and switching costs are significantly less ($17 M) reflecting their power plant levels. A significant cost subsystem is the CF coil supply, reflecting high power levels transmitted in short times with an energy storage of 5 MJ. The capacitive storage unit was estimated at $200,000/MJ.

The conceptual design of the ECRH system is to utilize two 7 MW power supply modules to drive twenty four ECRH gyrotrons. This design is similar to a 5 MW multiple gyrotron application proposed for EBT-P. The power supply system would use a 7 MVA power supply module along with an individual series pass tube modulator/regulator for each gyrotron. The series tube will act as an interruptor for each tube. An existing quote for a 5 MW system was scaled up to a 7 MW size system and then a 90% learning experience curve was applied to yield a unit power supply system cost $1.5 M for the 20th unit ($215/kW).

The LH plasma heating and current drive system is a high power system (142 MW). If this system could use similar 7 MW power supply systems, the unit price would be lowered to approximately $1 M each, yielding a LH power supply system cost of $20 M. But the system performance was felt to be improved and more design flexibility could be obtained with individual power supplies to drive each CFA (432). With this large quantity, the cost/kW was estimated at $80/kW, yielding a LH power supply cost of $14.2 M and a lower system cost than the multiple supply approach.

The total cost for the power supply system is:

$$C_{22.01.07} = \$52.9 \text{ M}$$

Table 22-34. Power Supply, Switching and Energy Storage Costs

Subsystem		Costs ($M)
Toroidal Field Coils		0.3
- Power Supply (3.2 MVA)	0.3	
- Protective Circuit in Acct 22.01.03	N/C	
Equilibrium Field Coils		27.2
- Power Supply (290 MVA)	23.2	
- Dump Circuit	4.0	
Ohmic Heating Coils		1.7
- Power Supply	0.3	
- Blocking Diodes	0.4	
- Liquid Rheostat	1.0	
Correction Field Magnets		9.3
- Power Supply	0.3	
- Capacitive Energy Storage (5 MJ)	1.0	
- Coil 1 and 3 choppers (3.3 MW each)	1.3	
- Coil 2 and 4 choppers (33 MW each)	6.7	
ECRH Gyrotrons		3.0
- Power Supply Modules (14 MW, 2 Units)	3.0	
LHH CFA		11.4
- Power Supplies (142 MW, 432 Units)	11.4	
Total Power Supply Switching and Energy Storage $C_{22.01.07}$		= 52.9

22.5.3.8 Impurity Control (Acct 22.01.08)

The subsystem components of the Impurity Control system to be costed in this account are the limiter and its support structure. The limiter is a water cooled structure in intimate contact with the outer perimeter of the plasma, having a life approximately equal to the first wall and blanket.

Hence the limiter will be replaced with the blanket sector on a regularly scheduled basis. There are ninety six individual limiter units with associated structure and coolant tubes. There are four possible material choices being considered for use in the limiter; tantalum, vanadium, niobium and copper. The engineering choice is not a clear cut decision and the material has not been picked. However the economics of the limiter material may help make the material choice. The cost of the tantalum alloy (TA5W) is estimated at $380/kg with the installed cost being $500/kg. The price of tantalum is very much uncertain due to material availability as an imported strategic material and a growing demand for the material. The other two refractory alloys, $V_{20}Ti$ and FS-85 (Niobium alloy) are less expensive. $V_{20}Ti$ is $234/kg installed and FS-85 is $147/kg installed. A copper structure (AMAX-MZC) is the least expensive at $18/kg. The cost of the limiter made of the various materials are shown below:

Material	Weight (MT)	Unit Cost ($/kg)	Cost ($M)
Ta5W	32.00	500	16.00
V20Ti	11.65	234	2.73
FS-85 (Nb)	16.64	147	2.45
AMAX-MZC (Cu)	17.15	18	0.31

Clearly the choice should not be tantalum because of its higher price unless it had superior engineering characteristics. Copper is the lowest cost limiter but it may not have adequate life and structural properties in this environment. Either of the other two refractories probably represent what will finally be the material to be selected. For costing purposes, it will be assumed the niobium alloy is the selected material, with the system cost being:

$$C_{22.01.08} = \$2.45 \text{ M}$$

22.5.3.9 ECRH Plasma Breakdown (Acct 22.01.09)

The hardware in this account includes twenty four 160 GHz gyrotrons and 24 waveguides, 6 cm ID. No special launching mechanisms are required. The power supplies will be costed in Account 22.01.07.

The gyrotron required for the STARFIRE application will be similar in many respects to the existing Varian gyrotron which was recently tested at ORNL at 212 KW, 28 GHz. The current cost estimate for a 28 GHz or a 60 GHz tube and supporting components is $185,000.[6] The 160 GHz tube will be estimated to have a similar recurring cost estimate for the small lot purchase. If the costs are assumed to have a learning curve of 90%, the small lot cost of $185,000 will reduce to approximately a unit price of $110,000 over the cumulative purchases of prior tokamak fusion plants. Thus the costs of the installed gyrotrons will be $2.64 M.

The twenty four ECRH waveguides are 6 cm ID PCA SS pipe which generally follow the same routing as the rf ducts. Their length is estimated as 55 m of which 12 m will be replaceable with the blanket sectors during scheduled maintenance. The waveguides are estimated as type 316 stainless steel, Schedule 5 pipe. The installed cost will be $135/linear meter[7] including an adder of $5/m for the cost of copper and beryllium coatings. This yields an installed waveguide cost of $178,000. Thus the ECRH Breakdown System is $2.82 M.

$$C_{22.01.09} = \$2.82 \text{ M}$$

22.5.3.10 Main Heat Transfer and Transport (Acct 22.02)

This account includes the costs of the primary (light water) coolant system, the limiter cooling system (which provides feedwater heating) and the residual heat removal system (which circulates coolant through the blanket sectors during shutdown periods for maintenance). The primary coolant loop handles 3800 MW on a continuous basis to 4 steam generators. This system is considered to be very similar to present day PWR coolant and steam generator systems, upgraded to high reliability standards to achieve the necessary availability goals. The heat from the limiter (200 MW continuous) is utilized in the power conversion system to heat the feedwater. The limiter coolant is operated at a lower pressure, 4.2 MPa (600 psi) versus 15.2 MPa (2200 psi) for the primary coolant loop. The residual heat removal coolant is provided only to remove the residual heat in the blanket sectors during maintenance or in the event of a loss of a primary coolant system. Its primary function is to protect the capital investment and is not a safety system.

Table 22-35 lists the component costs of the three coolant systems. The manifolds are the most expensive elements of the systems representative of the sizes of the manifolds and the degree of redundacy of the system. The primary coolant is comprised of 2 loops with a pressurizer, 2 steam generators and 3 pumps in each loop. The valve costs are significant, reflecting the large sizes and number to assure flow path redundancy. The heat exchangers shown in the limiter cooling are three of the feedwater heat exchangers. The total heat transport system cost is:

$$C_{22.02} = \$69.84 \text{ M}$$

Table 22-35. Main Heat Transfer and Transport System Costs

	COST ($M)		
COMPONENT	PRIMARY COOLANT	LIMITER COOLING	RESIDUAL HEAT REMOVAL
MAIN PIPING	5.3	0.64	0.154
RING MANIFOLDS	14.2	1.64	-
SMALL PIPING	5.9	0.16	-
ELBOWS	0.8	0.03	-
VALVES	6.1	0.24	0.057
PUMPS	2.4	0.39	0.180
PRESSURIZER	6.2	0.47	-
WATER MAKEUP AND CONDITIONING	4.2	0.98	-
STEAM GENERATOR (4)	18.0	-	-
HEAT EXCHANGERS (3)	-	1.64	0.162
	63.1	6.19	0.553

Total Main Heat Transfer and Transport System Cost, $C_{22.02} = \$69.84$ M

22.5.3.11 Cryogenic Cooling System (Acct 22.03)

The cryogenic cooling system is a central facility which supplies all the liquid helium and nitrogen needs for the STARFIRE power plant. The cost estimate is based on vendor quotes of major components of similar cryogenic systems. This system is a relatively straight forward design using present

day technology equipment. The total installed system cost is estimated at $14.9 M.

$$C_{22.03} = \$14.9 \text{ M}$$

Helium Liquifier Refrigerator (Acct 22.03.01) -- This account covers the helium refrigerator-liquifier cold components including heat exchangers, expansion engines, helium purifiers and the helium compressors. The system is sized to deliver 20 kw of refrigeration at 4.2 to 4.5°K at the design LHe supply rate of 26,500 liter/hr. The cost of this system is estimated at $7.7 M.

$$C_{22.03.01} = \$7.7 \text{ M}$$

LHe Transfer and Storage (Acct 22.03.02) -- The LHe storage is accomplished with single 100 kiloliter dewar to provide a storage capacity of 4 hours in the event of a LHe supply failure. A transfer system is also included to supply and recover the helium from the user systems (coils, cryopumps and fuel handling and tritium processing). This system will cost $3.6 M.

$$C_{22.03.02} = \$3.6 \text{ M}$$

He Gas Storage (Acct 22.03.03) -- A gaseous storage of helium is provided to accommodate 70,000 STD m^3 at a pressure of 20 atmospheres. The cost of this system is $2.8 M but is considered cost effective by reuse of the helium which will be in short supply.

$$C_{22.03.03} = \$2.8 \text{ M}$$

LN_2 System (Acct 22.03.04) -- The LN_2 system supplies 1500 liter/h at 80°K. The system is comprised of a closed cycle nitrogen liquification plant, transfer lines and a 40 kiloliter liquid storage dewar. The nitrogen system cost is $800,000.

$$C_{22.03.04} = \$0.8 \text{ M}$$

22.5.3.12 Radioactive Waste Treatment and Disposal (Acct 22.04)

This system processes all radioactive waste products (excluding tritium) for disposal by storage, transportation off-site or venting up the stack, if

permissible. The radioactive waste products can be liquid, gaseous or solid. Processing of the waste products will take place in the Hot Cell Building.

The costs for the Radioactive Waste Treatment and Disposal System is estimated at $4.8 M, based upon the sum of the individual elements.

$C_{22.04}$ = $4.8M

Liquid Waste Processing and Equipment (Acct 22.04.01) -- This account considers the costs for processing all liquid wastes from the reactor and BOP systems. The principal source of liquid waste is from the primary coolant and steam condensate after the tritium has been removed by the Tritiated Waste Treatment Unit in the Fuel Handling and Storage System. Equipment will include storage tanks, pumps, compressors, heaters, heat exchangers, condensers, gas strippers, evaporator systems, ion exchange systems, filters, traps, separators, piping, valves, insulation and support structure. This system is sized to be similar to a PWR. Reference 2 suggests a cost estimate based upon thermal power which yields a cost of $650,000, which is too low. Costs based on an estimate of a PWR liquid radioactive waste system[8], scaled up to STARFIRE power levels and escalated to present cost levels, yield $1.7 M. This is a more reasonable system cost, and will be adopted.

$C_{22.04.01}$ = $1.7 M

Gaseous Waste and Off-Gas Processing System (Acct 22.04.02) -- The gaseous wastes and off-gas processing system processes and prepares for disposal the waste gases from the Fuel Handling and Storage System, the condenser and the turbine generator units, the Atmospheric Tritium Recovery Systems (ATRS) and any off-gas recovery from the liquid and solid waste process. Equipment would include storage tanks, process columns and towers, filters, separators, dehumidifiers, heat exchangers, gas coolers, compressers, blowers, pumps, chemical reactors, piping, and supporting structure. The vent stack is included in Account 21.17. Because of the handling of larger volumes of D_2 and T_2 gases in the reactor systems, a cost estimate based on a PWR system cost ($0.5 M) is inadequate. The PNL CER[2] yields a cost of $1.8 M, which will be adopted.

$C_{22.04.02}$ = $1.8 M

Solid Wastes Processing Equipment (Acct 22.04.03) -- This system handles all the wastes from the Fuel Handling and Storage System, the particulate from the ATRS, radioactive crud from the primary and closed coolant systems and the activated components removed from the reactor. These waste products are reduced to manageable sizes and placed in processing equipment for removal of liquid and gaseous products. Then the remaining solids are condensed and drummed for storage or removal. Equipment required includes storage equipment, filters, centrifuges, separators, heaters, pumps, compressors, incinerators, baler, drummer, piping and equipment support. It is felt that the PNL CER[2] yields an adequate cost allowance ($1.3 M) for this system.

$$C_{22.04.03} = \$1.3 \text{ M}$$

22.5.3.13 Fuel Handling and Storage System (Acct 22.05)

The Fuel Handling and Storage System (tritium and deuterium) for STARFIRE accomplishes the extraction, recovery, purification, preparation, storage and injection of the fuel elements. This system also is responsible for maintaining safe levels of tritium in all reactor and heat transfer coolant streams and in the atmosphere within the reactor building, the hot cells and the tritium facility, both for normal operation and emergency conditions.

Table 22-36 presents the system component costs along the recommended DOE guidelines for the Fuel Handling and Storage systems. A more complete system description and the component performance specifications can be found in Chapter 14. The costs estimated for the pumps, piping, valves and installation are based on very sketchy information and are intended as only guideline allowances. The component costs are based upon data from TSTA/LASL and the Mound facility. Most of the system elements are commercially available, with only a few elements requiring development for a fusion power plant application. Hence, the costs quoted are representative of the expected costs. The most expensive element in the Fuel Handling and Storage System is the ATRS, reflecting the philosophy of a quick recovery of tritium in the event of an accidental release in the large volume of the Reactor Building. The total system cost is:

$$C_{22.05} = \$38.6 \text{ M}$$

Table 22-36. Fuel Handling and Storage Systems Costs

ACCT.	TITLE	COSTS ($M)	
22.05.01	Fuel Purification		8.8
	- Isotope Separation Units (4)	4.8	
	- Fuel Cleanup Units (4)	2.0	
	- Pumps, Piping, Valves and Installation	2.0	
22.05.02	Liquefaction		N/C
	(Included in 22.05.01)		
22.05.03	Fuel Preparation		0.3
	- Fuel Blending Unit (2)	0.2	
	- Pumps, Piping, Valves and Installation	0.1	
22.05.04	Fuel Injection		1.4
	- Fuel Gas Puffer (4)	0.2	
	- Pumps, Piping, Valves and Installation	1.2	
22.05.05	Fuel Storage		2.0
	- Tritium Storage Units (40)	1.6	
	- Deuterium Storage	0.1	
	- Pumps, Piping, Valves and Installation	0.3	
22.05.06	Tritium Extraction and Recovery		5.4
	- Tritiated Water Recovery Unit (1)	0.8	
	- Tritium Waste Treatment Unit (1)	0.5	
	- Blanket Recovery Units (4)	2.0	
	- Ion Exchange/Filter Units	0.1	
	- Pumps, Piping, Valves and Installation	2.0	
22.05.07	Atmospheric Tritium Recovery Systems		20.7
	- Tritium Facility System Building	2.2	
	- Reactor Building	12.0	
	- Hot Cell Building	2.5	
	- Pumps, Piping, Valves and Installation	4.0	
	Total Fuel Handling and Storage System Cost, $C_{22.05}$ =		38.6

22.5.3.14 Other Reactor Plant Equipment (Acct 22.06)

This account encompasses all of the other reactor systems not previously covered. Several systems are of particular interest, namely the maintenance equipment, the inert atmosphere systems in the reactor and hot cells, the Closed Loop Coolant System, and the Standby Cooling System. The major cost item in this account is clearly the maintenance equipment which costs $38.3 M. Thus the cost of this system is estimated at

$$C_{22.06} = \$43.75 \text{ M}$$

Maintenance Equipment (Acct 22.06.01) -- All the maintenance equipment necessary to service the Reactor Plant Equipment including systems such as Fuel Handling and Storage, Rad Waste, Main Heat Transport, and Cryogenic Cooling are included in this account. The only exceptions to this are the monorail maintenance system and the overhead cranes in the Reactor Building and the Hot Cell, which are included in Account 25.01, Transportation and Lifting Equipment. The First Wall Coating Machine is included but is considered to be an optional piece of equipment and not costed in the baseline reactor. Also the equipment to inspect and repair the steam generator is shown, but is used so infrequently it is anticipated that they will be contracted service and no capital equipment will be required. A list of maintenance equipment is shown in Table 22-37.

Special Heating Systems (Acct 22.06.02) -- Special heating systems are used for heating or preheating plant components and also for producing steam as an emergency or auxiliary power source. In STARFIRE, no emergency or auxiliary steam is required and any preheating of the heat transfer system components will be accomplished by using the pump work from the coolant and the circulating pumps. Thus no costs are included in this account.

$$C_{22.06.02} = \$0$$

Coolant Receiving, Storage and Make-Up Systems (Acct 22.06.03) -- This account specifically covers the receiving, storage and make-up of the heat transfer coolants. Since all of the STARFIRE coolants are water, only minor costs are involved in this account. Two 150 gpm primary water make-up pumps

Table 22-37. Maintenance Equipment Costs

MAINTENANCE EQUIPMENT	QUANTITY	TOTAL COST ($M)
Reactor Building		
Reactor Overhead EM Manipulator	1	0.75
Process Module Overhead Manipulator	1	0.75
Coolant Line Handling Machine	1	1.00
RF Duct Handling Machine	1	1.00
Anti-Torque Panel Handling Machine	1	1.00
Shield Door Handling Machine	1	1.50
Blanket Sector Handling Machine	2	4.00
Isolation Valve Handling Unit	1	0.60
First Wall Coating Machine (Optional, Not Costed)	(1)	(3.00)
Universal Remote Maintenance Vehicle	3	6.00
Mobile Servo-Manipulator Vehicle	1	1.50
Steam Generator Tube Inspection Equipment	1 Contracted Services	(0.75)
Steam Generator Tube Leak Detector	1 Contracted Services	(0.50)
Steam Generator Tube-Plugging Equipment	1 Contracted Services	(1.50)
Steam Generator Replacement Equipment	1 Contracted Services	(6.00)
Airlock Door Seal Replacement Equipment	-	0.30
Remote Viewing Equipment	-	0.75
Crane Bay Maintenance Equipment	-	3.00
Special Remote Tools	-	2.00
Holding Stands, Lift Fixtures and Slings	-	3.00
Auxiliary Lighting	-	0.20
	Reactor Subtotal	27.35
Hot Cell Building		
EM Maniqulator	3	1.50
Remote Viewing Equipment	-	0.25
Auxiliary Lighting	-	0.20
Disassembly/Reassembly Stands, Fixtures	-	5.00
and Slings	-	0.50
Crame Bay Maintenance Equipment	-	2.00
Test Fixtures	-	1.50
	Hot Cell Subtotal	10.95
	Total Maintenance Equipment Cost, $C_{22.06.01}$ =	38.30

are required with a 180,000 gallon water storage tank and associated piping. This system is estimated at $240,000.

$$C_{22.06.03} = \$240,000$$

Gas Systems (Acct 22.06.04) -- The only gas system not included under other specific accounts is the CO_2 required for the inert atmosphere for the Reactor Building and the Hot Cell. The nitrogen and helium are stored in the Cryogenic Cooling system and the tritium, deuterium and iodine are stored in the Fuel Handling and Storage Building. SF6 or Freon fill gas for the rf ducts will be stored in the basement of the reactor.

The equipment in this account includes the storage tanks, pumps, piping, valves and supports, which are estimated at $80,000. The gas is not recycled or reused, but is exhausted through the ventilation stack.

$$C_{22.06.04} = \$80,000$$

Inert Atmosphere System (Acct 22.06.05) -- The atmosphere in the Reactor Building is inert CO_2 supplied from the Gas System on a once-through basis. Exhaust fans in both buildings reduce the pressure within the building below the ambient pressure to assure no out leakage in the event of a major tritium release. Under normal operation, the CO_2 atmosphere is exhausted to the environment up the ventilation stack. Due to the low in-leakage, a low flow rate of CO_2 is planned. Tritium monitors within the building will activate the fans to stop operation and valves to close, sealing the building in the event the tritium level is excessive. All of the above discussed hardware is already included in other accounts and no specific hardware has been identified unique to this sytem, thus there is no cost in this account.

$$C_{22.06.05} = 0$$

Fluid Leak Detection (Acct 22.06.06) -- The remote leak detection system is designed to detect vacuum leaks in the shield, shield door and a portion of the rf duct, to detect coolant leaks in the blanket and coolant piping and to detect helium/T_2 leaks in the helium purge system. The system utilizes a cavity between dual seals which is regularly sampled for pressure buildup. Into this cavity a tracer gas can be introduced and the leak can be located with a RGA (residual gas analyzer). It is planned to use

one RGA in each vacuum duct to isolate the leak to a single seal set. Leak detection systems will also be incorporated on all helium and coolant line joints inside the reactor building. The leak detection system, defined in Chap. 20, will consist of RGA's, seals and sampling cavities, tracer gas systems, tubing and test lines, remote detectors on manipulator arms. An allowance of $2 M is allowed for this system.

$C_{22.06.06}$ = $2 M

Closed Loop Coolant System (Acct 22.06.07) -- The Closed Loop Coolant System provides cooling for the following systems:

- All ATRS in Reactor, Hot Cell and Fuel Handling (normal operation)
- Solid waste storage (normal operation)
- Fuel Handling and storage process equipment
- RF system
- Reactor Shield
- CF coils
- Power supplies
- Vacuum roughing pumps
- HVAC for Reactor, Hot Cell and Fuel Handling

The system costs are shown in Table 22-38.

$C_{22.06.07}$ = $1.97 M

Table 22-38. Closed Loop Coolant System Costs

Component	Cost ($M)
Water Pumps, 15000 gpm (3)	.240
Heat Exchangers, 67 MW (3)	1.703
Surge Tank, 3000 gal (1)	.027
Total Closed Loop Coolant System Cost, $C_{22.06.07}$ =	$1.97

Standby Cooling System (Acct 22.06.08) -- This system is designed to provide standby cooling for essential systems in the event of the closed loop failure. The systems provide cooling on an as-required basis to the control room HVAC and the Residual Heat Removal system and on a standby basis for the

Solid Waste Storage in the Hot Cell and all the ATRS systems. The cooling system is a single loop powered by two pumps. This system utilizes a separate dry cooling tower as an integral part of this system and hence the cost is reported in this account rather than in Acct 23.03, Turbine Plant Heat Rejection Systems under cooling towers. This cooling tower is the major cost element in this account. Table 22-39 lists the major system elements and their installed costs.

$$C_{22.06.08} = \$1.16 \text{ M}$$

Table 22-39. Standby Cooling System Costs

Component	Cost ($M)
Pumps, 8000 gpm (2)	.095
Surge Tank, 2000 gal (1)	.025
Cooling Tower, Dry	1.040
Total Standby Cooling System Costs, $C_{22.06.08}$	= $1.16

22.5.3.15 Instrumentation and Control (Acct 22.07)

The reactor Instrumentation and Control System components are grouped under three main headings as shown in Table 22-40 along with the system costs. These costs are based on an advancement in the state of the art in the I&C technology especially in the area of controllers, computers, communication, data transmission and displays. These advancements are expected to have increased system capabilities with reduced costs. The total I&C cost for the reactor plant equipment is

$$C_{22.07} = \$23.41 \text{ M}$$

22.5.3.16 Reactor Spare Parts Allowance (Acct 22.98)

The need to provide spare parts to allow routine maintenance in a timely manner and to provide replacement parts in the event of an unscheduled maintenance action requires a large inventory in the Reactor Plant Equipment. The preponderance of large and expensive components coupled with the fast maintenance response required for high availability causes this cost account to be a high cost item. Table 22-41 delineates the major items and their

Table 22-40. Reactor Instrumentation and Control System Costs

Account	Title		Cost ($M)
22.07.01	Reactor I & C Equipment		7.61
	o Local Controllers (200)	1.514	
	o Communication Concentrators (20)	.690	
	o Local Analysis/Control (10)	.846	
	o Communication Control	.234	
	o Plasma Instrumentation	4.326	
22.07.02	Monitoring Systems		1.76
	o Data Base & Network Communication	.366	
	o Displays and Controls	.916	
	o Sequencing System	.170	
	o Alarm/Monitoring	.185	
	o Remote Access w/Comm. Link	.123	
22.07.03	Instrumentation and Transducers		14.04
	o Reactor Instrumentation	12.636	
	o Remote Handling Systems	1.404	
	Cost of Reactor Instrumentation and Control, $C_{22.07}$ =		23.41

costs. The items of lesser costs are covered under a two percent allowance for all the Reactor Plant Equipment (Acct. 22). The total parts allowance is $66.38 M.

The philosophy for the required spares shown in Table 22-41 needs some explanation. The quantity annually replaced is also shown in this table to clarify their expected lifetimes and maintenance actions. The six year life for the blanket sector, including the limiter, first wall, blanket, rf grill and rf duct extension, requires four parts to be purchased each year but they are costed in the Annual Scheduled Replaceable Component costs. The TF coil has no planned spares. The EF and OH coils only have installed spare coils for the coils trapped beneath the TF coils. The reliability of cryogenic coils are felt to be high enough not to warrant the purchase of spare

Table 22-41. Cost of Reactor Plant Equipment Spare Parts

Major Components	Qty. in Service	Spare Parts Qty	Cost of Spares ($M)	Qty Annually Replaced
Wall/Blanket/Limiter/ rf duct sector	24	0 (a)	0	4
TF Coil	12	0 (a)	0	0
EF Coil	8	2	8.64	0
CF Coil	4	4 (30° Segments)	0.33	0
OH Coil	6	2	3.39	0
Vacuum Cryopump	48	2 + 24 MOL Sieves	0.56	Refurb. 24 MOL Sieves
Vac Isol Vlv, Rt. Angle	48	4	0.06	Refurb. 24 stem assy.
Vac Isol Vlv, Gate	48	4	0.08	0
Shield Access Door	12	2	5.03	Replace Seal
ECRH Gyrotrons	24	2	0.22	0
RF CFA	432	180	4.95	Refurb. 144
RF Window Assembly	36	4	0.06	0
RF Waveguide Elbow	12	1	0.23	0
Vacuum Pods	24	2	8.93	0
RF Phase Shifter	432	6	0.08	0
RF Circulator	432	6	0.07	0
RF Power Supply	432	18	0.59	0
Anti Torque Panel	12	1	2.76	0
Coolant Tube Bundle (2 types)	24	4	0.08	0
Primary Coolant Pump	4	1	0.55	0
Blanket Recovery Unit	34	1	0.50	0
ATRS	-	2	0.98	0
Maintenance Equipment	12	1 Set Principal Units	12.60	0
			50.69	
		2% Allowance:	15.69	

Reactor Plant Equipment Spare Parts Cost, $C_{22.98}$ = $66.38 M

(a) Included Under Annual Scheduled Component Replacement Cost, Acct. 50

units. The cost of the spare OH and EF coils are not an integral fraction of the total cost due to the dewars and MLI*. The plasma chamber vacuum cryopump is a reliable system requiring only two spares but the refurbishment of the associated molecular sieves require an additional 24 sieves. A number of

*Multi-layer insulation.

components, i.e., rf wave guide elbow, rf window assemblies, vacuum pod shield and the antitorque panel, are allocated spare parts to provide for spare refurbished units with seals replaced when they are dismantled for blanket replacement. The three year life of the CFA's require an additional 180 to allow for refurbishment of the units. The quantity of spares for the remainder of the components is self-evident.

$$C_{22.98} = \$66.38 \text{ M}$$

22.5.4 Turbine Plant Equipment (Acct 23)

This account defines the costs associated with the Turbine Plant Equipment which takes the thermal energy from the reactor and converts it to electrical energy and rejects the remaining thermal energy to the environment. The cost of this system is $249.68 M, which is higher than most published estimates of saturated steam power conversion systems. Most of the estimated costs in this system are based upon quotes from manufacturers specifically for the STARFIRE specifications. Therefore these quotes reflect current prices including inflationary effects. This system is not inherently any more expensive than a PWR system just because it is associated with a fusion reactor. Most of the equipment is of a conventional design for central generating stations.

$$C_{23} = \$249.68 \text{ M}$$

22.5.4.1 Turbine Generators (Acct 23.01)

The turbine is a single 1800 rpm tandem-compound unit receiving 400 MW thermal in slightly superheated steam. The generator is a hydrogen-inner-cooled synchronous generator with a power factor of 90%. The turbine generator set is capable of an overall thermal efficiency of 36%. The price quote is based on a single stage of moisture removal resulting in an efficiency of 34%. Very little additional cost is assumed to be required to incorporate two additional stages of moisture removal to achieve the 36% efficiency in the time frame when STARFIRE will be constructed. For more information, see Sec. 20.4.1.3.

The cost of the turbine generator includes the unit, the lube oil conditioning system and the labor costs to install it. The total cost is

$$C_{23.01} = \$77.33 \text{ M}$$

22.5.4.2 Main Steam System (Acct 23.02)

This account includes all the costs associated with the main steam piping, steam safety valves, steam stop valves, main steam dump valves and associated supports and hangers. The design condition for the piping is 6.3 MPa and 299°C at a flow rate of 7.43×10^6 kg/hr. The cost of the material and installation labor is:

$$C_{23.02} = \$4.37 \text{ M}$$

22.5.4.3 Heat Rejection System (Acct 23.03)

Table 22-42 illustrates the system elements in the Heat Rejection System. This system rejects the heat from not only the main condenser but also the closed coolant system, turbine plant cooling water system, electrical component loads, the cryogenic systems and the I&C system. The heat is rejected into the atmosphere with the use of three wet, natural draft, hyperbolic cooling towers. A detailed description is shown in Sec. 20.4.2.3. This system cost is:

$$C_{23.03} = \$44.34 \text{ M}$$

Table 22-42. Heat Rejection System Costs

Component	Cost ($M)
Circulating Water Pump	3.01
Main Cooling Tower, Natural Draft (3)	30.00
Cooling Tower Foundations and Basins	8.31
Circulating Water Valves	0.74
Circulating Water Pipe	1.02
Cooling Tower, Fire Protection	1.26
Total Heat Rejection System Costs, $C_{23.03}$ =	$44.34 M

22.5.4.4 Condensing System (Acct 23.04)

This system handles 2400 MW of thermal energy from the exhaust steam and maintains an 8.1 kPa average condenser back pressure. Three centrifugal condensate pumps deliver 525 liters/second each at a total dynamic head of 305 m. The system costs are shown in Table 22-43.

$$C_{23.04} = \$19.18 \text{ M}$$

Table 22-43. Condensing System Costs

Component	Cost ($M)
Main Condenser and Tubes	17.60
Condensate Pump	1.14
Steam Primary Pump	0.11
Steam Air Ejectors	0.33
Total Condensing System Costs, $C_{23.04}$ =	$19.18 M

22.5.4.5 Feedwater Heating System (Acct 23.05)

The feedwater system supplies feedwater to the steam generators at the required flow rate, temperature and pressure for maximum turbine efficiency. The feedwater heaters costed in this account are all associated with steam extracted from the high and low pressure turbines. The three #2 feedwater heaters are heated from the limiter cooling system and are costed in the Main Heat Transfer Transport System, Acct. 22.02. The total system cost is shown in Table 22-44 and it totals:

$C_{23.05}$ = $9.39 M

Table 22-44. Feedwater Heating System Costs

Component	Cost ($M)
Aux Feedwater Pump and Turbine Drive	0.39
Aux Feedwater Pump and Drive Motor (2)	0.33
Feedwater Pump and Motor Drive	0.62
Feedwater Pump and Turbine Drive	1.72
Feedwater Pump and Turbine Exhaust Duct	0.23
Feedwater Heaters (18)	6.10
Total Feedwater Heating System Costs, $C_{23.05}$ =	$9.39 M

22.5.4.6 Other Turbine Plant Equipment (Acct 23.06)

This account includes gas storage, chemical treatment systems, condensate and steam blowdown systems, turbine plant cooling water system and associated process piping. The major portion of the costs are involved in

the piping, valves, supports and hangers as shown in Table 22-45. The total system costs are

$$C_{23.06} = \$50.84 \text{ M}$$

Table 22-45. Other Turbine Plant Equipment Costs

Component	Cost ($M)
Hydrogen Storage and Control Cabinet	0.04
Nitrogen Storage and Control Cabinet	0.07
Degasifier Package	0.29
Chemical Addition Package	0.17
Condensate Demineralization Package	3.64
Condensate Drain Tank	0.03
Steam Generator Blowdown Drain Pump	0.01
Nitrogen Booster Compressor (2)	0.09
Demineralized Water Storage Tank	0.13
Tank Heating Coils	0.02
Condensate Storage Tank	0.43
CO_2 Storage	0.09
Waste Condensate Collection System	0.42
Steam Generator Blowdown System	0.77
Turbine Plant Cooling Water System	0.11
CS-A-106 Process Piping	11.47
CS-A-155 Process Piping	2.50
SS-A-312-TP-304 Process Piping	8.11
Misc Valves	8.73
Misc Pipe Supports and Hangers	13.72
Total Other Turbine Plant Equipment Costs, $C_{23.06}$ = $50.84 M	

22.5.4.7 Instrumentation and Control (Acct 23.07)

This system includes BOP instrumentation and controls and the BOP computer and accessories. The cost of the I&C is estimated at $5.97 M and the BOP computer is estimated at $2.73 M. The total cost of the Turbine Plant I&C System is:

$$C_{23.07} = \$8.70 \text{ M}$$

22.5.5 Electrical Plant Equipment (Acct 24)

The Electric Plant Equipment includes the switchgear for the generator circuits and station service, station service equipment, switchboards, protective equipment, electrical structures and wiring container, power and control wiring and lighting. The power and control wiring are the largest cost item. The total cost is:

$$C_{24} = \$117.28 \text{ M}$$

22.5.5.1 Switchgear (Acct 24.01)

This account includes the cost of the switchgear for the generator circuits and the station service. The generator circuit switchgear includes the generator circuit breaker, grounding transformer, current limiting reactor, disconnect switch and outdoor oil circuit breaker. The generator switchgear costs $2.33 M. The station service switchgear includes switchgear line up for busses #1 and 2 and all the major facility buildings. The station service switchgear is estimated at $10.06 M.

$$C_{24.01} = \$12.39 \text{ M}$$

22.5.5.2 Station Service Equipment (Acct 24.02)

The Station Service Equipment includes the service and lighting transformer, 480 V load center and motor control centers, the DC and UPS systems, battery system for the Turbine Generator and the computer system for the Electric Plant Equipment. This system cost is shown in Table 22-46 which gives the total cost as:

$$C_{24.02} = \$17.04 \text{ M}$$

22.5.5.3 Switchboards (Acct 24.03)

Table 22-47 lists the system components and costs for the necessary switchboard system. The cost is highly labor intensive with the physical equipment a minor portion of the overall cost. The total cost is:

$$C_{24.03} = \$7.80 \text{ M}$$

Table 22-46. Station Service Equipment Costs

Component	Cost ($M)
Transformers (24)	4.76
Standby Gas Turbine Generators (2)	5.04
480 V Load Centers (10)	1.48
480 V Motor Control Centers (35)	3.65
Lighting Transformers (46)	1.14
DC and UPS Systems, Protection and I&C	.40
Battery System for T-G	.15
Data Logger and Computer	.42

Total Station Service Equipment Cost $C_{24.02}$ = $17.04 M

Table 22-47. Switchboard Costs

Component	Cost ($M)
Main Control Boards for Electric Systems	2.40
Aux Power and Signal Boards	3.20
Electric Heat Tracing	2.00
Constant Voltage Regulating Transformer	0.20

Total Switchboard Costs, $C_{24.03}$ = $7.80 M

22.5.5.4 Protective Equipment (Acct 24.04)

The cost of the grounding systems is estimated at $0.56 M, which includes cables, connectors and supports. The cathodic protection system costs $1.55 M, which includes grounding rods, lightning protection and miscellaneous cable and wire connectors. The total system cost is:

$C_{24.04}$ = $2.11 M

22.5.5.5 Electrical Structures and Wiring Containers (Acct 24.05)

The Electrical Structures and Wiring Container costs are summarized on Table 22-48. The majority of the cost is in the cable trays, metallic conduits and supporting structures. The total system cost is:

$C_{24.05}$ = $17.40 M

Table 22-48. Electrical Structures and Wiring Container Costs

Component	Cost ($M)
Duct Banks	1.07
Cable Trays and Supports	8.39
Metal Conduit and Supports	6.45
Nonmetallic Conduit and Supports	1.10
Flexible Conduit	0.39
Total Electrical Structures and Wiring Container Cost, $C_{24.05}$ =	$17.40 M

22.5.5.6 Power and Control Wiring (Acct 24.06)

This account is also a labor intensive activity. Table 22-49 lists the major elements and their costs. The total cost of the Power and Control Wiring is $35.99 M.

$C_{24.06}$ = $35.99 M

Table 22-49. Power and Control Wiring Costs

Component	Cost ($M)
Generator Circuits Wiring	9.36
Station Service and Control Wiring	4.34
Instrument Wiring and Connections	13.13
Containment Penetrations	2.03
Interconnections - DC Power Supplies and Coils	7.13
Total Power and Control Wiring Cost, $C_{24.06}$ =	$35.99 M

22.5.5.7 Electrical Lighting (Acct 24.07)

The electrical lighting for the plant is a subcontracted effort which is estimated at $8.20 M.

$C_{24.07}$ = $8.20 M

22.5.6 Miscellaneous Plant Equipment (Acct 25)

This account includes the equipment categories which encompass all parts of the facility, i.e. transportation and lifting equipment, air and water service systems, communications and furnishings and fixtures. This cost may seem higher than most published quotes, but this is likely due to the amount of detail in defining the system, e.g. sixteen separate cranes are identified The total cost of the Miscellaneous Plant Equipment is:

C_{25} = \$40.77 M

22.5.6.1 Transportation and Lifting Equipment (Acct 25.01)

The elements of this account are the freight elevators, bridge cranes and maintenance monorails within the Reactor Building and Hot Cell. These items are discussed in the Maintenance Chap. 19 in detail and also in Chap. 20, BOP Design. Table 22-50 lists the equipment which includes three elevators, 16 cranes and a monorail system within two buildings. The total cost for the Transportation and Lifting Equipment is \$15.68 M.

$C_{25.01}$ = \$15.68 M

22.5.6.2 Air and Water Service System (Acct 25.02)

This account includes all the facility air and water service systems and the auxiliary steam boiler system. Table 22-51 lists the components of this system, for which the total cost is:

$C_{25.02}$ = \$12.35 M

22.5.6.3 Communications Equipment (Acct 25.03)

The cost of the facility communication system is compiled in Table 22-52. The system is comprised of Communication System, Evacuation Alarm System, Plant Security System and conduit for the communication and telephone systems. The total cost is:

$C_{25.03}$ = \$6.22 M

22.5.6.4 Furnishings and Facilities (Acct 25.04)

The allowance for facility furnishings and fixtures is \$750,000.

$C_{25.04}$ = \$0.75 M

Table 22-50. Transportation and Lifting Equipment Costs

Component		Cost ($M)
Freight Elevators		0.30
Reactor Building	0.10	
Electrical Equip and Power Supply Building	0.10	
Plant Auxiliary Building	0.10	
Bridge Cranes		9.88
Reactor Building, 600 Tonne*, 50 m Span	4.00	
Reactor Building, 60 Tonne, 50 m Span	0.75	
Reactor Building, 5 Tonne, 8 m Span (Radial)	0.05	
Hot Cell Building, 250 Tonne, 14 m Span	1.50	
Hot Cell Building, 150 Tonne, 14 m Span	0.75	
Hot Cell Building, 50 Tonne, 14 m Span (2)	1.20	
Turbine Building, 250 Tonne, 36 m Span	0.50	
Turbine Building, 60 Tonne, 20 m Span (2)	0.60	
Turbine Building, 10 Tonne, 20 m Span	0.08	
Fuel Handling and Storage Bldg, 15 Tonne, 2 m Span	0.12	
Fuel Handling and Storage Bldg, 5 Tonne, 20 m Span	0.04	
Pump House, 20 Tonne	0.12	
On-Site AC Power Supply Bldg, 10 Tonne (2)	0.17	
Monorails		5.50
Reactor Building Monorail with 2 Pair Switches	3.00	
Hot Cell Building Monorail (No Switches or Turntables)	1.00	
Hot Cell Monorail Turntables, 8 m dia, 300 Tonne (3)	1.50	
Total Transportation and Lifting Equipment Cost, $C_{25.01}$ = $15.68 M		

*1 Tonne = 1000 KG = 1 MT

Table 22-51. Air and Water Service System Costs

Component	Cost ($M)
Service Water Pump (3)	0.62
Raw Water Pump (2)	0.17
Aux Steam Boiler System	1.22
Instrument Air Compressor (3)	0.18
Instrument Air Dryer	0.04
Service Air Compressor (2)	0.12
Make-Up Water System	4.09
Make-Up Water Treatment System	2.82
Service Water Piping and Acc.	1.68
Raw Water Piping	1.41

Total Air and Water Service System Cost, $C_{25.02}$ = $12.35 M

Table 22-52. Communications Equipment Costs

Component	Cost ($M)
Communication System	0.80
Evacuation Alarm	0.20
Plant Security System	4.80
Communication Conduit and Supports	0.34
Telephone Conduit, Fittings and Supports	0.08

Total Communications Equipment Cost, $C_{25.03}$ = $6.22 M

22.5.7 Special Materials (Acct 26)

This account includes the cost of special (nonfuel and nonstructural) materials and special (other than natural water) heat transfer fluids or gases. A material is defined as a special material if it is necessary only to purchase it immediately prior to system startup, and thus the material is not a part of the initial system acquisition. The cost of special materials included in this account is shown in Table 22-53. The requirements are very sketchy at the present time so an allowance of $250,000 is allocated for this category.

Table 22-53. STARFIRE Special Materials

Name	Requirements	Source of Reqmt.	Cost/ Unit	Cost ($M)
Nitrogen	3900 m^3 @ 13.8 MPa	Tritium Facility		
	? Liquid	Cryo System		
CO_2	1000 m^3 @ 13.8 MPa	Tritium Facility		
	? m^3 @ 13.8 MPa	Hot Cells		
Argon	100 m^3 @ 13.8 MPa	Tritium Facility		
Breathing Air	1300 m^3 @ 13.8 MPa	Tritium Facility		
Helium	100 m^3 @ 13.8 MPa	Tritium Facility	2.2/1	.22
	? m^3	Tritium Recovery		
	100kl Liquid	Cryo System	2.2/1	.22
SF6 or Freon	400 m^3 @ 2atm	rf Heating		
Xenon or Iodine	?	Impurity Control		

Total Special Materials Cost , C_{26} = 0.25 (Allowance)

22.5.8 Construction Facilities, Equipment and Services (Acct 91)

This account includes the net cost of facilities which are removed or dismantled after completion of the construction, the net cost or rental expense of equipment used during construction labor force education, receiving and storage, testing, site cleanup and O & M of facilities and equipment. It is estimated that 10% of the direct plant cost or $172.65 M will provide adequate funds to construct the temporary facilities, purchase or rent the construction equipment and acquire the necessary construction services. Table 22-4 lists the subelements under each of the above categories. Unique requirements of STARFIRE cause these higher and lower cost factors as compared to a PWR system:

Higher Cost Factors

- o Access and lifting equipment for large and heavy components (i.e., TF coils, 580 Tonnes)
- o Larger aggregate and concrete plant than comparable PWR
- o New types of construction equipment
- o Higher level of skills required in some areas

Lower Cost Factors

- o Higher percentage of reactor and plant equipment assembled and quality tested at factory only requiring installation and pre-op checkout
- o Modular construction techniques
- o Experience curve for tenth of a kind

22.5.9 Engineering and Construction Management Services (Acct 92)

The engineering services required for the project are costed in this account. It is assumed that this plant is the tenth of a kind. Hence, all general research and development work has been accomplished and similar plants have been previously designed and are operating in other locations. Therefore the costs reported in Acct 92 represent only the incorporation of site specific, utility specific, new regulatory guide and design improvement requirements. An eight percent allowance of the total direct costs are included.

$$C_{92} = .08 \text{ X } 1726.48 \text{ M} = \$138.12 \text{ M}$$

This estimate is considered to still be a conservative estimate when the absolute costs are compared to a typical fission plant of the same size ($40 M to $50 M versus $138 M).

22.5.10 Other Costs (Acct 93)

The Other Costs account, which includes property and all risk (non-nuclear liability) insurance, staff training and plant statup and owners G&A, is estimated for STARFIRE to require a similar percentage compared to a typical PWR plant. Five percent of the total direct was allocated for Acct 93,

$$C_{93} = .05 \text{ X } 1726.48 \text{ M} = \$86.32 \text{ M}$$

This is felt to be compatible with the current and anticipated costs of insurance, the increased skill level of the staff training, and the complexity of the plant startup procedures. The Owners G&A will probably be the only item held to levels similar to LWR plant experience. Therefore the five percent value seems credible.

22.5.11 Interest During Construction (Acct 94)

Assuming the financing ground rules specified in Sec. 22.2.5 along with the estimated expenditure pattern shown in Fig. 22-2 and the anticipated schedule of six years (see Sec. 23.2), an allowance for the cost of interest during construction was calculated. The factors applied were computed following the techniques outlined in Ref. 9 and recommended in Ref. 1. Table 22-54 lists specific values and Fig. 22-3 presents the data graphically. For the STARFIRE construction period of six years, the factor of interest during construction is 0.1303 (Constant Dollars) and 0.3163 (Then-Current Dollars), yielding Acct 94 costs of:

$$C_{94} = 0.1303 \text{ X } 2123.57 \text{ M} = \$276.70 \text{ M (Constant Dollars)}$$

$$C_{94} = 0.3163 \text{ X } 2123.57 \text{ M} = \$671.69 \text{ M (Then-Current Dollars)}$$

22.5.12 Escalation During Construction (Acct 95)

This account collects all capital costs attributable to escalation into one account. From Table 22-54 the factor for EDC during the six year construction time period is 0.1896 for the Then-Current Dollar analysis mode. The total escalation costs for STARFIRE is

$$C_{94} = 0.1896 \text{ X } 2123.57 \text{ M} = \$402.63 \text{ M (Then-Current Dollars).}$$

Addition of this cost account to the previous capital costs converts the capital costs into the time frame of the completion of construction and plant startup and reflects the "as-spent" costs of the facility. Escalation of the annual costs will be handled in their respective accounts, taking the present cost estimate times the cumulative escalation rate through the construction period.

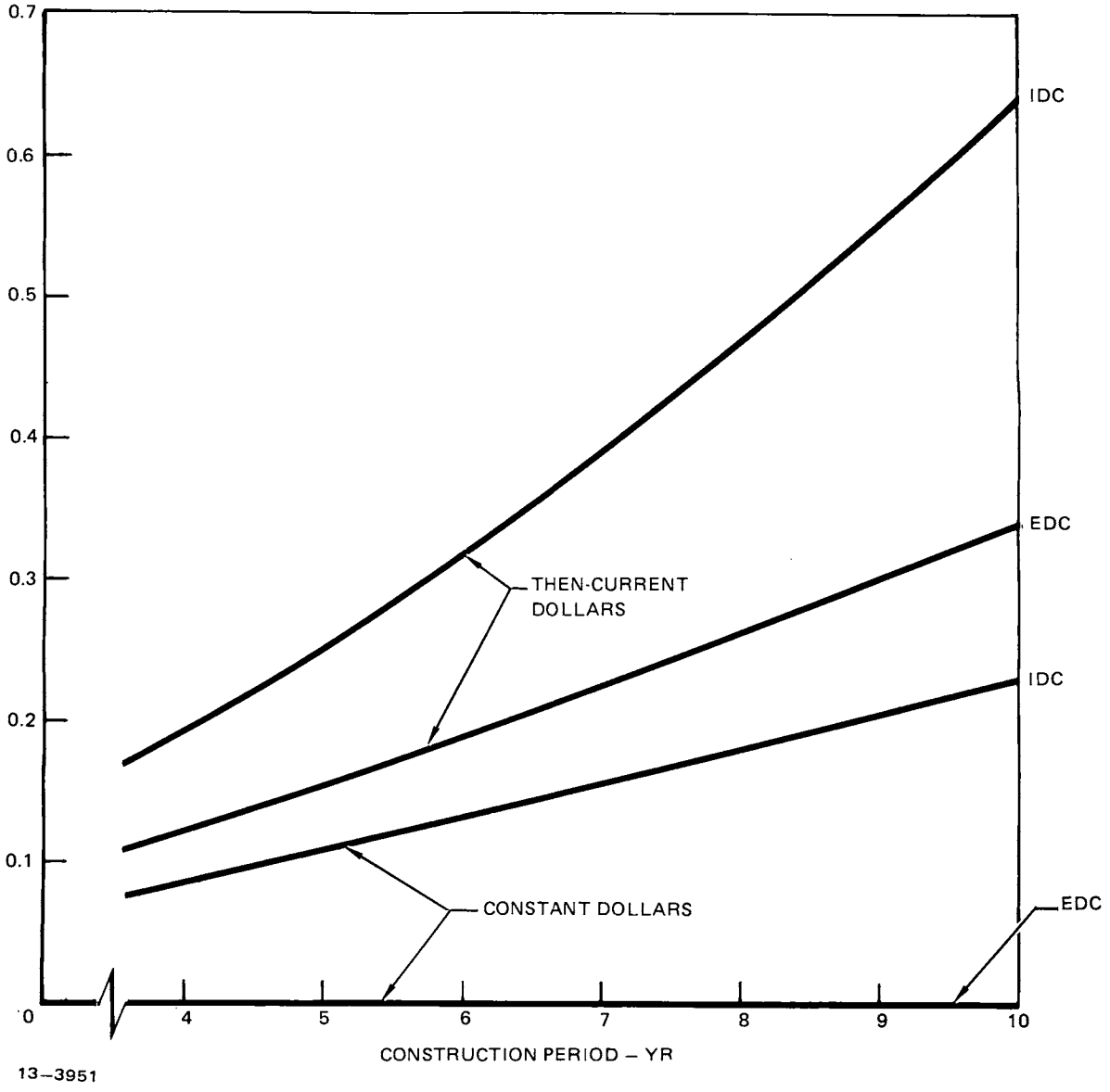

Figure 22-3. Factors for IDC and EDC.

Table 22-54. Factors for IDC and EDC

Construction Period - Yrs	Constant Dollars IDC	Constant Dollars EDC	Then-Current Dollars IDC	Then-Current Dollars EDC
4.0	.0847	0	.1911	.1223
4.5	.0959	0	.2203	.1387
5.0	.1072	0	.2509	.1554
5.5	.1187	0	.2829	.1724
6.0	.1303	0	.3163	.1896
6.5	.1421	0	.3513	.2072
7.0	.1540	0	.3879	.2250
7.5	.1661	0	.4261	.2431
8.0	.1783	0	.4659	.2615
9.0	.2032	0	.5511	.2992
10.0	.2288	0	.6440	.3381

22.6 BUSBAR ENERGY COST ELEMENTS

The busbar energy cost is defined as the unit cost of generating a kilowatt-hour for electricity available at the generator busbars. The total energy cost for the fusion reactor electricity-producing facilities is computed as a function of the following components:

- Total capital cost
- Financing assumptions
- Fixed charge rate for annual cost of capital
- Annual operating and maintenance cost
- Annual scheduled component replacement cost
- Annual fuel costs
- Plant availability
- Plant net capacity

Most of the elements necessary to determine the COE (Cost of Energy) have previously been discussed (capital cost in Sec. 22.4, financing assumptions in Sec. 22.2.5, availability in Sec. 19.6 and plant net capacity in Sec. 2.7). All annual cost elements will be discussed in this section.

22.6.1 Annual Levelized Capital Cost

The cost of capital is levelized over the economic life of the facility by utilizing a fixed charge rate[10]. This charge rate, when applied to the total facility capital investment cost, yields the annual expense resulting from 1) the capital investment cost being divided equally and charged equally to all annual operating periods and 2) the annual fixed operating and maintenance expenses which are costed as a function of the capital investment costs. Those O&M costs not directly related to capital costs are reported in the O&M Accounts 40 through 47. Shown below are the elements of the fixed charge rate based on the assumption of an investor-owned utility.

- Cost of Capital
- Depreciation
- Interim Replacement
- Property Insurance
- Federal Income Taxes
- State and Local Taxes

The cost of capital component represents the rate of return on investment allowed by the regulatory agencies. Depreciation factor uses a sinking fund method of depreciating the capital cost over the economic life of the plant. Interim replacement costs are the expenses for replacing plant equipment (less than $10,000) with shorter service lives than the 30 year economic life of the plant. Those elements greater than $10,000 are accounted in the Scheduled Component Replacement Cost Account, 50. Property insurance includes both property damage and third party liability. The federal income tax component is based on the capital structure of the utility, sum-of-the-year digits depreciation and a 50% federal income tax rate. A typical value is assumed for the state and local taxes. The Fixed Charge Rate (FCR) used in these analyses are 10% for the constant dollar analysis and 15% for the then-current dollar analysis[1].

Annualized Capital Cost = 0.10 X 2440 M = $240.0 M (Constant Dollar Mode)

= 0.15 X 3198 M = $479.7 M (Then-Current Dollar Mode)

22.6.2 Annual Operations and Maintenance Cost

Operating and maintenance costs consist of the routine day to day expenditures required to operate the facility, exclusive of those expenses directly related to the capital costs. These expenses include the cost of salaries, supplies, maintenance material and process chemicals. The considered O&M cost accounts for fusion reactor design studies are shown in Table 22-55. The costs for the nuclear liability insurance, license, fees and working capital will not be considered or included[1].

Table 22-55. Operations and Maintenance Cost Accounts

Account Number	Account Title
40	Annual Salaries of Facility Personnel
41	Annual Miscellaneous Supplies and Equipment
42	Annual Outside Support Services
43	Annual General and Administrative Costs
44	Annual Coolant Makeup
45	Annual Process Materials
46	Annual Fuel Handling Costs
47	Annual Miscellaneous

Note: Items or activities not included:

- o Nuclear Liability Insurance
- o License and Fees
- o Working Capital

Annual Salaries of Facility Personnel (Acct 40) -- The salaries required by the facility operating and maintenance personnel are costed in this account. A few of the costing assumptions are listed below:

- o The plant requires only routine technial assistance.
- o The plant is operating in a base-loading condition.
- o Five complete operating crews are used to provide full facility operation, an additional day crew, and relief coverage.
- o G&A services are provided by the utilities' central administrative organization.

- Facility operations, including routine schedule maintenance, is highly automated and computer controlled from central control room.
- Onsite fuel handling is included in this account.

The plant staffing is planned for normal operation only. It is felt that normal scheduled maintenance activities can be accomplished by the regular staff. An estimate of the required staffing is shown in Table 22-56. This staffing is organized along the guidelines of Ref. 10. Typical staffing levels for LWR plants of similar sizes is estimated to be in the range of 145[11]. The staffing levels shown in Table 22-56 for fusion supplements those LWR personnel requirements by adding control room operators, general equipment and maintenance equipment operators, instrument maintenance personnel, computer maintenance technicians and technical specialists in the areas of fusion unique systems. With the advent of more mechanized maintenance and high level diagnostics, this staffing should be adequate. If any extra staffing is required for scheduled component replacement, it will be reported in Acct 50. Unscheduled outage maintenance staffing requirements will be reported in Acct 42, Outside Support Services.

The salary/wage values shown in Table 22-56 include the basic salary/wage costs, fringe benefits, shift premiums, insurance, and overhead allowances. The general wage level was based on Ref. 2, Appendix F. The average annual cost per staff member is approximately $47,000. Thus the annual personnel cost is $7.21 M. This compares well with recent PWR plant staffing allowances[3,12].

The security requirements for a fusion plant is anticipated to be similar to a new PWR[12], therefore the cost is estimated to be approximately $1.5 M. This would include a full time security staff and any equipment rental required.

The total facility personnel requirement will be:

C_{40} = $8.71 M

Annual Miscellaneous (Consumable) Supplies and Equipment (Acct 41) -- This account costs the miscellaneous consumable supplies and equipment used on a routine day to day operation. They include ion-exchange chemicals, chlorine, water treatment chemicals, gasses (nonfuel), potable water, waste

Table 22-56. Fusion Power Plant Staff (1200 MWe)

STAFF POSITION	QUANTITY	SALARY/WAGES* (K$)
SUPERINTENDENT'S OFFICE		
PLANT SUPERINTENDENT	1	80
ASSISTANT SUPERINTENDENT	1	76
SECRETARY	1	35
OPERATIONS		
OPERATIONS SUPERVISOR	1	72
SHIFT SUPERVISOR	5	65
SENIOR CONTROL ROOM OPERATOR	5	60
CONTROL ROOM OPERATOR	10	55
EQUIPMENT OPERATOR	10	55
MAINTENANCE EQUIPMENT OPERATOR	10	55
EQUIPMENT ATTENDANT	5	40
MAINTENANCE		
MAINTENANCE SUPERVISOR	1	70
MECHANICAL FOREMAN	1	55
ELECTRICAL FOREMAN	1	55
INSTRUMENT FOREMAN	1	55
MECHANIC	5	46
MECHANIC'S HELPER	5	40
WELDER	4	46
MACHINIST	4	46
ELECTRICIAN	5	46
ELECTRICIAN'S HELPER	4	40
INSTRUMENT MECHANIC	10	46
INSTRUMENT HELPER	5	40
COMPUTER TECHNICIAN	3	50
MAINTENANCE EQUIPMENT MECHANIC	6	50
TECHNICAL		
TECHNICAL SUPERVISOR	1	72
PLANT ENGINEER	1	65
ASSISTANT PLANT ENGINEER	1	55
INSTRUMENT ENGINEER	2	65
NUCLEAR ENGINEER	2	70
COMPUTER SPECIALIST	2	55
SYSTEMS ANALYST	1	60
MAINTENANCE SPECIALIST	1	60
HEALTH PHYSICIST	1	60
CHEMIST	1	60
LAB & INSTRUMENT TECHNICIAN	8	40
CLERICAL AND SERVICES		
CLERICAL AND SERVICES SUPERVISOR	1	40
BOOKKEEPER	3	30
TYPIST	4	24
STOREKEEPER	2	30
CLERK	5	30
DATA MANAGEMENT SPECIALIST	1	35
YARDMAN	2	28
JANITOR	7	28
HANDYMAN	3	28
	153	AVERAGE 47

* SALARIES, FRINGE BENEFITS, SHIFT PREMIUMS AND OVERHEAD ALLOWANCES INCLUDED.

containers, toilet paper, oil and maintenance supplies parts and materials. These costs vary with the size and capacity of the plant. Typical PWR plants allow \$5 M to \$6.5 M[3,12] for this account. The ORNL procedure[11] for estimating O&M costs would allow 45% of staff costs (\$3.2 M), which is probably too low in light of the more advanced technology. This account is estimated to be:

$$C_{41} = \$5.2 \text{ M}$$

Annual Outside Support Services (Acct 42) -- Outside support services are taken to include all services obtained from other than the normal plant complement during normal working hours. This includes utility personnel from other locations as well as the cost of station personnel working overtime on special tasks such as maintenance and repair. Other requirements for outside support services include film-badge processing, laundry of contaminated clothing, radiation waste disposal off-site and consulting services.

Reference 2 suggests the annual cost per person for special maintenance personnel as \$55,000 (1979 \$) or \$60,000 (1980 \$). Considering that shift premiums, travel allowance, remote location, etc., will raise the wage base, a 60% increase was included, which yielded a \$46/h rate. The annual unscheduled outage has been estimated at 54 days/year. Most of these outages will be for a single small maintenance action requiring only a few people. However there can be major failures, which would require a large contingent of maintenance and technical specialists. On the average, it was assumed to require five men per shift. For the special maintenance, the cost would be:

$$C_{42} = \$792,000$$

Annual General and Administrative Costs (Acct 43) -- Activities such as payroll administration, purchasing and division management are included in this account. The cost is assumed to be 15% of accounts 40, 41 and 42.

$$C_{43} = \$2,205,000$$

Annual Coolant Makeup (Acct 44) -- The cost of replenishment of the water coolants is slight and is included in the cost of the municipal water under Misc. Supplies and Equipment (Acct 41).

$$C_{44} = \$0$$

Annual Process Materials (Acct 45) -- The items to be included in this account are large quantity materials consumed during reactor operation. Examples include water treatment or tritium processing. Small quantity process materials were costed in Misc. Supplies and Equipment (Acct 41). The definition of these for fusion is not well established but an allowance of $1 M is made to cover these purchases.

C_{45} = $1,000,000

Annual Fuel Handling Costs (Acct 46) -- Reference 1 states that if the onsite fuel handling activities require less than 20% of the operating staff's work time, the activities will be costed in other O&M cost accounts and no cost in this account. It is felt that fuel handling will largely be automated and impose a minimal workload on the operating crew. Hence, the annual cost for fuel handling will be assumed to be zero.

C_{46} = $0

Annual Miscellaneous Costs (Acct 47) -- These miscellaneous O&M costs include:

- Training of replacement staff personnel
- Requalification of licensed reactor operators
- Rent of property, equipment or facilities
- Travel
- Public relations
- Office supplies
- Fuel and upkeep on station vehicles

If the costs from Ref. 10 for this account were scaled to STARFIRE power levels and escalated to present cost, the cost would be approximately $200,000. This cost would seem to be very low considering the required level of training and requalification of personnel, travel and P.R. regarding the plant. To cover these factors, this account was estimated at:

C_{47} = $1.5 M

Total O&M Costs -- Table 22-57 lists the individual O&M costs accounts, their individual costs and the summary O&M cost. The total O&M cost ($19.4 M) is lower than the Ref. 1 recommended guideline of 2% of the direct

and indirect costs excluding the time related costs (approximately $40 M). However, most PWR plants have O&M costs less than the STARFIRE estimate when nuclear liability insurance, license and inspection fees and major retrofits are excluded. Thus this estimate seems to be a reasonable allowance.

Table 22-57. Operations and Maintenance Costs

Account Number	Account Title	Cost
40	Annual Salaries of Facility Personnel	$8,710,000
41	Annual Miscellaneous Suppliers and Equipment	5,200,000
42	Annual Outside Support Services	792,000
43	Annual General and Administrative	2,205,000
44	Annual Coolant Makeup	0
45	Annual Process Materials	1,000,000
46	Annual Fuel Handling	0
47	Annual Miscellaneous Costs	1,500,000
	Total Annual Operations and Maintenance Cost	$19,407,000

22.6.3 Annual Scheduled Component Replacement Cost

The Scheduled Component Replacement Costs are the expected annual costs of routine scheduled maintenance or replacement of major (cost greater than $10,000) reactor components. The first wall and blanket materials must periodically be replaced or refurbished. The costs are usually high enough to warrant the visibility of a separate cost account. The cost will include both equipment, material and special labor costs.

$$C_{SCR} = C_{50} + C_{51} = \$14.39\ M + 2.97\ M = \$17.36\ M$$

Annual Reactor First Wall/Blanket Component Replacement (Acct 50) -- On an annual basis, the reactor will be shut down to replace one-sixth of the wall and blanket sectors. The replacement cost will include one-sixth of the blanket and first wall ($C_{22.01.01}$) which includes the wall, wall modifier, neutron multiplier, breeder, reflector and structure plus the cost of the limiter and a portion of the rf and ECRH ducts. Some of the materials such as the Zr_5Pb_3 and $LiAlO_2$ can be recycled after a short period to allow the radioactivity level to decay to acceptable levels. Following this

storage period they will be refabricated and installed in a replacement sector. It is estimated that the extra costs associated with handling, storage and preparation for refabrication will offset the credit for the material costs. All of the items will be assembled by the supplier as a complete integral replacement sector. The cost of other materials used in the disassembly/reassembly, such as welding materials, seals, etc., are minor and will be accounted in O & M Account 41. The labor associated with the scheduled maintenance is considered to be an integral part of the operating crews normal duties due to the highly automated maintenance process. Thus the costs are represented by:

$$C_{50} = 1/6\ (C_{22.01.01} + C_{limiter} + C_{rf\ duct} + C_{ECRH\ duct})$$
$$= 1/6\ (82.36 + 2.45 + 1.14 + 0.39) = \$14.39\ M$$

Annual Replacement of Other Reactor Components (Acct 51) -- This account embraces all other major replaceable or repairable components to be maintained on a scheduled basis. Table 22-58 lists those major items, unit cost, replacement frequency and annual cost. Several items, such as the vacuum isolation valves or the CFA's can be refurbished. The cost shown in this account represents the refurbishment of these items. The only item which represents a major cost impact is the rf CFA refurbishment. All other items can be refurbished or repaired at low cost or they are not a scheduled replaceable item. The capital cost for components necessary to allow refurbishment is shown in Account 22.98, Reactor Spare Parts.

Table 22-58. Other Scheduled Reactor Replaceable Component Costs

Component	Unit Price or Refurbishment Cost	Replacement Frequency	Annual Cost
Crossed Field Amplifier	20,625 (R)	144/yr	$2.97M
Rt Angle Vacuum Isolation Valve	40,000	24/yr	Repairable Item
Vacuum Cryopump Molecular Sieves	-	24/yr	Repairable Item
ECRH Gyrotrons	110,000	Not Sched.	
ATRS		Not Sched.	
Power Supplies		Not Sched.	
LHe Refrigerators		Not Sched.	
Shield Door Seals		2/yr	Repairable Item
		Total Cost, Acct 51 =	$2.97 M

22.6.4 Annual Fuel Cost

The annual fuel cost estimate for STARFIRE considers the purchase cost of fuel materials. Since one component, tritium, is generated within the reactor by the irradiation of a lithium compound, the process is self sustaining and tritium is considered as a no cost fuel item. Cost for tritium processing facilities is included as a capital cost. Deuterium is purchased as D_2 at a price of \$2175/kg[2]. Fuel burnup is estimated at 530 grams/day for T_2 or D_2. Considering a small amount of leakage (5%) and the plant availability of 75%, a prorated daily D_2 usage would be 420 g and the annual cost would be \$333,000. All other "fuel cycle materials" such as tritium breeding materials, neutron multipliers, cladding, et al, are considered to be essential parts of the replaceable FW/B sector and as such will be costed in Account 50, Annual Reactor First Wall/Blanket Component Replacement.

$$C_{02} = \$333,000$$

No offsite processing and disposal facilities are considered, hence, no costs will be reported in Account 03.

$$C_{03} = \$0$$

22.6.5 Plant Availability

The plant availability factor is defined as the ratio of the expected amount of energy generation and the amount of energy generation that would occur if the plant operated 100% of the time at design power level. The availability is reduced from 100% due to outage time for scheduled (Ts) and unscheduled (Tu) maintenance.

$$\text{Plant Availability} = \frac{365-Tu-Ts}{365}$$

Section 20.3, Maintenance Approach, fully defines the annual scheduled and unscheduled times allowed in STARFIRE. The scheduled outage time has been estimated as 28 days per year for reactor and balance of plant and 120 days every 10 years for turbine-generator overhaul and TF coil anneal. To achieve the availability goal of 75%, discussed in Sec. 2.2, the unscheduled outage is set at 54 days/year. The availability factor is a very powerful factor in the cost of electricity, hence, much effort has been expended to maintain it at the goal value.

22.6.6 Plant Capacity

Plant capacity is the net electric energy that would be produced annually by the fusion power plant if operating continuously at the design level of power generation.

Plant Capacity = Plant Design Net Electric Power Level x 8,760,000 where Capacity is in KWh/yr and Power Level is in MWe

The gross thermal power level to the turbines has been determined to be 4000 MW. With a gross cycle conversion efficiency of 36%, the gross electric ouput of the generator is 1440 MWe. The net electric power level of 1200 MWe is obtained by subtracting off the allowance for auxiliary power requirements of 90 MW, and 150 MW for the rf plasma heating.

22.7 BUSBAR ENERGY COST CALCULATIONS

All the prior analyses are utilized in preparing the necessary data to calculate the busbar cost of energy available from the STARFIRE fusion power plant. This energy cost is the most important evaluation tool to compare alternative energy sources. Both constant year and then-year dollar analyses are used to evaluate STARFIRE economic parameters. The general equation for busbar energy cost is

$$COE = \frac{C_{AC} + (C_{O\&M} + C_{SCR} + C_F)\ (1 + E)^P}{PC \times PAF \times 10^{-3}}$$

where

- COE = Cost of Electricity in Constant or Then-Current Dollars (MILLS/KWh)
- C_{AC} = Annual Capital Cost Charge = Total Capital Cost x Fixed Charge Rate (0.10 or 0.15)
- $C_{O\&M}$ = Annual Operations and Maintenance Cost = Sum of C_{40} through C_{47}
- C_{SCR} = Annual Scheduled Component Replacement Cost = Sum of C_{50} and C_{51}
- C_F = Annual Fuel Costs = Sum of C_{02} and C_{03}
- E = Escalation Rate = 0 for Constant Dollars and 0.05 for Then-Current Dollars

P = Construction Period (yrs)

PC = Plant Capacity (kwh)

PAF = Plant Availability Factor (%/100)

COE, CONSTANT DOLLARS

$$COE = \frac{240{,}027{,}000 + (19{,}407{,}000 + 17{,}360{,}000 + 333{,}000)}{1200000 \times 8760 \times 0.75 \times 0.001} = \underline{35.1 \text{ Mills/kWh}}$$

COE, THEN-CURRENT DOLLARS

$$COE = \frac{479{,}683{,}500 + (19{,}407{,}000 + 17{,}360{,}000 + 333{,}000)(1.05)^6}{1200000 \times 8760 \times 0.75 \times 0.001} = \underline{67.1 \text{ Mills/kWh}}$$

22.8 COMPARISON WITH OTHER TOKAMAK STUDIES

Whenever an economic analysis of a conceptual design study is completed, the natural tendency is to compare the current economic results to the results of related prior studies. This process of comparison is fraught with dangerous premises and assumptions. The studies probably had divergent overall goals and guidelines to satisfy. The economic climate has certainly changed in recent years with high inflation rates and rapidly escalating costs associated with limited materials and any energy dominated products.

Different reactor design approaches to the concepts have caused large cost differences in the nuclear island costs. These design differences also have impacted the buildings and the construction schedules. Even the indirect cost accounts have varied depending on the assumptions used regarding the necessary engineering and construction services and equipment. The allowances for design uncertainty, contingency and spare parts have had a large divergence depending upon the level of definition within the study.

In an attempt to alleviate some of the disparate costing assumptions and concentrate on the cost impact of the design assumptions, this comparison will deal only with the direct costs and not consider any indirect or time related costs. This is a very good approximation because in fusion studies, the dominant factor in the cost of electricity is capital related (85 to 90% of the total cost).

The two tokamak studies of most renown and recent vintage are NUWMAK and UWMAK III. These two studies will be compared to STARFIRE. Table 22-59 lists the published direct costs of the three concepts for the first level cost accounts (20-26) in the left hand columns. STARFIRE and NUWMAK reflect the accounting procedure recommended by DOE[1], but UWMAK III preceded its publication. Therefore UWMAK III's contingency allowance was distributed on a prorated basis to the individual accounts. Inherent in these published costs are certain allowances which should be kept in mind. Design allowances of 10% and 20% were used on NUWMAK, while STARFIRE included the design allowance implicitly with the estimate and UWMAK III did not use design allowances. Allowances for contingency varied from 10% on NUWMAK, 15% for STARFIRE and 30% ON UWMAK III. A spares allowance of 2% was assumed on STARFIRE and a range of 1/2, 1 and 2% was used on NUWMAK. UWMAK III did not identify a spares allowance which was probably considered to be a part of the contingency allowance.

These published figures provide a basis upon which to make cost comparisons. The middle two columns in Table 22-59 represent costs which have been escalated to 1980 dollars using the GNP Price Level Deflators, Table 22-6. In current dollars, NUWMAK costs about 1 billion dollars for a 660 MW facility or $1516 per kilowatt capacity. UWMAK III, escalated to current dollars, costs over 4 billion and $2125/kWe. STARFIRE compares favorably to the two other concepts in current dollars, being slightly more reasonable than

Table 22-59. Direct Cost Comparison of Tokamak Concepts ($M)

	AS PUBLISHED			ESCALATED		ESCALATED & NORMALIZED	
Concept	STARFIRE	NUWMAK	UWMAK III	NUWMAK	UWMAK III	NUWMAK	UWMAK III
Year of Estimate	1980	1978	1975	1980	1980	1980	1980
Net Capacity (MWe)	1200	660	1985	660	1985	1200	1200
20 Land and Land Rights	3	2	1	3	2	5	1
21 Struct & Site Facil	346	129	738	153	1046	241	712
22 Reactor Plt Equip	969	534	1056	632	1496	1000	1017
23 Turbine Plt Equip	250	119	729	141	1033	222	703
24 Electric Plt Equip	117	46	364	54	516	86	351
25 Misc Plt Equip	41	13	78	16	110	25	75
26 Special Mat'ls	1	1	10	2	15	3	10
Total Direct Cost	1729	844	2976	1001	4218	1582	2869
Direct Cost $/kWe	1439	—	—	1516	2125	1318	2391

NUWMAK. However, it has to be kept in mind that the capacity of these facilities varied from 660 MWe, 1200 MWe and 1985 MWe. Facilities such as these exhibit cost advantages due to economy of scale. If it is assumed an economy of scale exists of 85%, NUWMAK costs will be scaled up by the factor $(1200/660)^{.765}$ and the UWMAK costs would be scaled by the factor, $(1200/1985)^{.765}$. (See Section 22.2.1 for a more detailed explanation of

the mathematics involved.) Applying these factors, the values shown in the right columns in Table 22-59 are obtained. With this analysis, NUWMAK has a slight cost advantage while UWMAK III continues at a decided disadvantage. To help understand the cost disparities, the individual cost accounts will be analyzed.

Structures and Site Facilities - UWMAK III used a cost/unit volume basis for their cost estimate and their reference volumes were very extensive, yielding quite high costs. Also the complexity of the system required larger sized, unique buildings and facilities (helium and lithium coolant loops). On the other hand, NUWMAK's low costs can be attributed to lack of completeness in the structures and facilities accounts. Not considered in the NUWMAK costing were Site Improvement and Facilities, Cooling System Structures, Fuel Handling and Storage Building and several other necessary minor buildings with costs totaling $40 M or more. Their unit costs were reasonable, but the building volumes were optimistic as compared to STARFIRE.

Reactor Plant Equipment - When compared on a normalized basis for varying power levels, all three reactors are estimated to be surprisingly similar ($1.0 B). UWMAK and NUWMAK reactor equipment (wall, blanket, shield, rf heating, magnets, etc.) cost only 35% of the Reactor Plant equipment whereas STARFIRE represents over 60%. The Reactor Equipment for UWMAK was reasonable but it was overshadowed by the heat transport system which had helium, lithium, sodium and steam coolants and high cost refractory metal piping for high temperature He coolant. NUWMAK costs seemed to be in line with STARFIRE in most areas except for rf heating and primary structure. STARFIRE chose to use a lower hybrid heating system utilizing a more efficient and less costly microwave generator system. Also the costs for the power supplies are included in a separate account. The Primary Structure and Support system for STARFIRE cost $53 M which includes the centerpost and struts, common and TF load-carrying dewars, antitorque structure and shield pedestal to support the blanket and shield. The magnetic and dead loads are very large and require large structures to react them. NUWMAK allocated less than $1 M for this purpose.

Turbine Plant Equipment - In this category, NUWMAK and STARFIRE are very similar in cost and UWMAK III is much more expensive. The UWMAK extra costs can be attributed to the more expensive, high temperature helium direct cycle power conversion system along with the additional lithium/steam system.

Electric Plant Equipment - Again NUWMAK and STARFIRE are comparable with UWMAK III being a higher cost system. The costs for UWMAK were higher across the board in Electric Plant Equipment. Also two elements were accounted differently. All the electrical installation costs were lumped in this account. The divertor coil power supply system and inductive energy storage costs were included in this account but in STARFIRE and NUWMAK they were included in Account 22.01.07.

Miscellaneous Plant Equipment - Again the discrepancy arises from where costs are credited. UWMAK III includes the blanket maintenance equipment in this account which represents 83% of the accounts costs. NUWMAK and STARFIRE include these costs in Account 22.06[1].

In summary, in comparing the costs of STARFIRE to UWMAK III and NUWMAK the cost differences are reconcilable. UWMAK III seems to represent a more advanced power conversion system with large facilities. The NUWMAK design reflects a more state of the art power technology but the costing base is not as complete. The STARFIRE concept utilized simplified design concepts (rf heating, steady state burn, limiter impurity control, etc), which has reduced the system costs. However offsetting this trend was a very complete design basis and costing analysis which went into much more detail. Typically a fusion conceptual design study considers only a few cranes (one for the reactor building, two in the turbine hall and one or two others). STARFIRE has 16 separate cranes, 3 elevators and a monorail system between the reactor and hot cell. This attention to detail, in part attributable to the presence of the earlier studies, resulted in higher final costs. However this detail does lend credibility to the cost of facility costs and presents a much more believable overall cost to the power industry. Also the cost of electricity is within the currently predicted range of costs for power generating stations to be operational in 1986.

22.9 COMPARISON OF FUSION WITH FISSION AND COAL

A major goal of the STARFIRE design study has been to determine the economic viability of a fusion power source for a commercial central station generating facility. The standard of comparison for this evaluation will likely be the costs of generating electricity with fission and coal. The cost of electricity generated by existing coal and fission plants is relatively inexpensive when compared to new plants now being constructed. Figure 22-4 shows the COE from existing fission plants is approximately 15 mills/kWh and the COE from coal is in the lower 20's. By comparison, the estimated cost of electricity from new fission and coal facilities has escalated to approximately 40 mills/kWh. Over the next 10 years it is predicted that the cost will further escalate to the range of 70 to 90 mills/kWh. Contributing to the range of costs shown is the variation in utility requirements, the region of the country, the type of fuel consumed and the local environmental standards. Two specific estimates of the cost of electricity from new generating facilities are represented in Fig. 22-4 as points (c). These are PWR plants (Callaway Units No. 1 and 2) now under construction by Union Electric Company in mid-Missouri. These costs are thought to be lower than a current contract would be, because contracts for major equipment and installation costs were secured several years ago with fixed escalation clauses. When the estimated cost of electricity from the fusion powered STARFIRE is considered, it is seen to be competitive with predictions of cost of electricity from coal and fission. This competitive picture is expected to improve as the cost of coal and nuclear fission fuel costs escalate, probably at some value above the general inflation index.

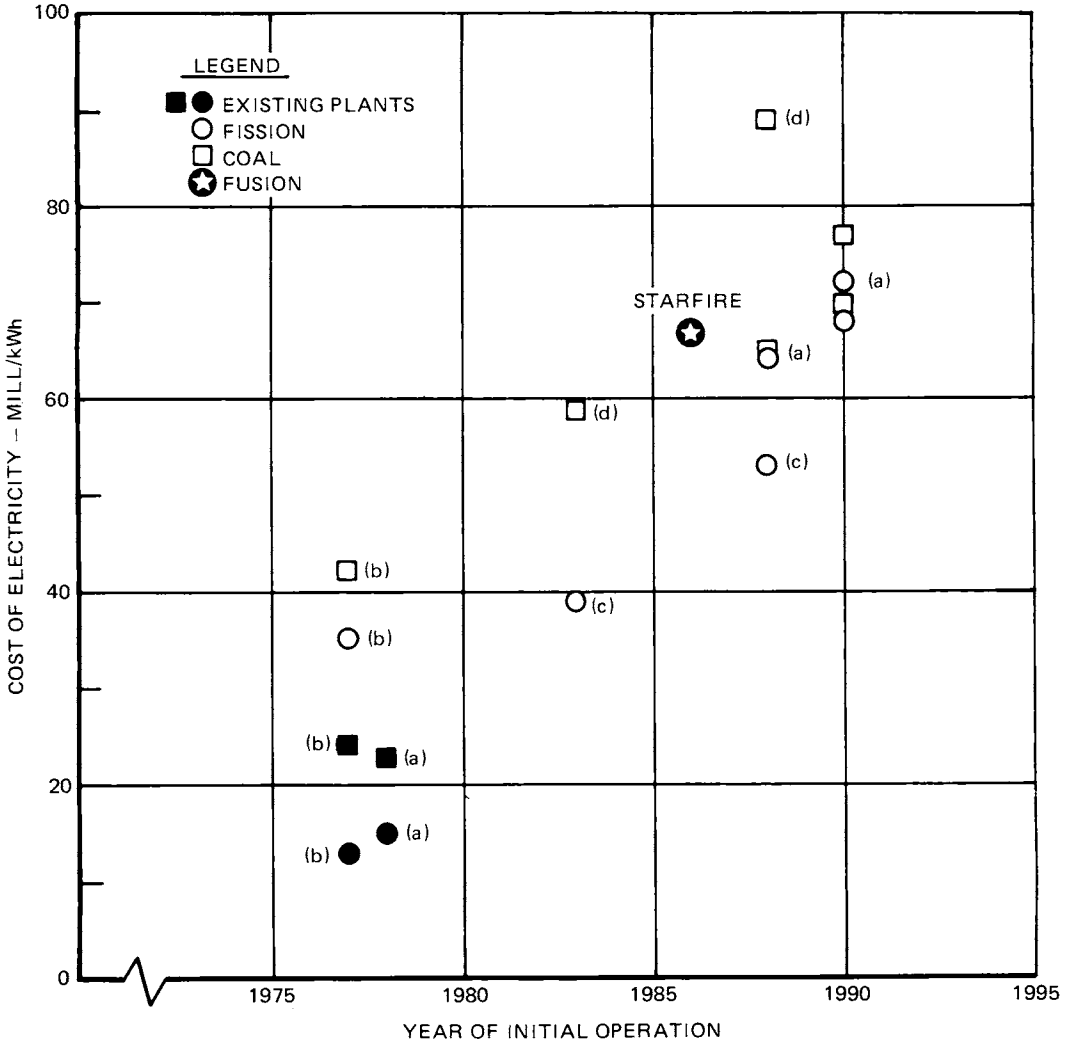

Data Sources

(a) Reference 13, EBASCO Services Inc.
(b) Reference 14, Commonwealth Edison Company
(c) Reference 12, Union Electric Company - Preliminary estimate for PWR under construction
(d) Reference 12, Union Electric Company

Figure 22-4. STARFIRE COE is competitive.

References

1. S. C. Schulte, et al., "Fusion Reactor Design Studies - Standard Accounts for Cost Estimates," PNL 2648, May 1978.

2. S. C. Schulte, et al., "Fusion Reactor Design Studies - Standard Unit Costs and Cost Scaling Rules," PNL 2987, September 1979.

3. Wm. M. McMahon, Jr., "Economics of Large and Small Coal and Nuclear Power Plants," Conference on Utilization of Small and Medium Size Power Reactors in Latin America, Montevideo, Uruguay, May 1980.

4. R. Edwards, Raytheon Corp., Private Communication, July 1980.

5. G. Browning, Varian Microwave Components, Private Communications, July 1980.

6. Request for Proposal Number 22-80414 - "Elmo Bumpy Torus Proof of Principle," ORNL, June 1980.

7. J. Yamartino, "Installed Cost of Corrosion-Resistant Piping - 1978," Chemical Engineering, Nov. 1978.

8. Wash. 1230, Vol. 1, "Pressurized Water Reactor Plant, 1000 MWe Central Station Power Plants Investment Cost Study," United Engineers and Constructors, Inc., June 1972.

9. D. L. Phung, "A Method for Estimating Escalation and Interest During Construction," Institute for Energy Analyses, Oak Ridge Associates Universities, October 1977.

10. "Guide for Economic Evaluation of Nuclear Reactor Plant Design," NUS 531, NUS Corporation, January 1969.

11. "A Procedure for Estimating Non-Fuel Operating and Maintenance Costs for Large Steam-Electric Power Plants." ERDA-76-37, ORNL, October 1975.

12. F. Brunson, Union Electric Company, Private Communication, July, 1980.

13. Leonard F. C. Reichle, "The Economy of Nuclear Versus Coal," EBASCO Services Incorporated, presented at the Richmond Society of Financial Analysts, Richmond, VA, 30 October 1979.

14. A. D. Rossin and T. A. Rieck, "Economics of Nuclear Power," Science, Vol 201, 18 August 1978.

Table of Contents

		Page
23.1	REFERENCE SITE	23-1
23.2	MODULAR CONSTRUCTION AND CONSIDERATIONS	23-2
23.3	HANDLING AND SHIPPING CONSIDERATIONS	23-4
23.4	BALANCE OF PLANT SCHEDULE	23-5
23.4.1	Introduction/Summary	23-5
23.4.2	Schedule Assumptions and Basis	23-7
23.4.3	Site Development	23-8
23.4.4	Facility Buildings	23-9
23.4.5	Construction Plan	23-14
23.5	REACTOR INSTALLATION AND SCHEDULE	23-16
23.6	DECOMMISSIONING	23-27

List of Figures

Number		Page
23-1	Plant construction schedule	23-6
23-2	Reactor construction schedule	23-17
23-3	Reactor building provisions for reactor construction	23-17
23-4	Reactor pedestal installation	23-19
23-5	Centerpost installation	23-20
23-6	TF coil installation	23-22
23-7	Shield installation	23-24
23-8	Blanket installation and final reactor assembly	23-26

This section addresses siting aspects and the planned construction sequence for the facility including the reactor. The overall construction time is six years which includes one year of test and checkout prior to commercial operation. The schedule is paced by construction of the reactor and reactor building. Three years of initial construction work in the reactor building is required prior to starting the reactor assembly sequences which require two years. The basis for the schedule is that the plant is the 10th of a kind which includes the building arrangement and subsystem components so that only site specific modifications such as contour grading, access road construction and cooling water and transmission line routing are required. Credit is taken in the construction schedule for use of improved construction techniques. These include standardized pre-fabricated wiring harnesses, signal multiplexing to minimize the number of separate wires and off-site construction of modular components.

23.1 REFERENCE SITE

The facility will be located in a secured area within an approximate 365 ha (1000 acre) site adjacent to a river, lake, or other adequate supply of cooling water. The site boundary distance will limit the dose commitment from routine releases of all significant materials.

The reactor building and its supporting buildings, structures, and facilities will be located on level ground at an elevation unaffected by potential river floods, flood waves, or flooding from postulated dam failures.

The nearest river is navigable throughout the year and will be used for barge shipment of heavy items. Highway access is provided by 8 km of secondary road leading to a state highway. The secondary road requires no improvement to permit overload shipments. Railroad access will be provided by constructing an 8 km railroad spur from the main line to the plant site.

Other site-related assumptions have been established as follows:

- Adequate incoming power will be provided by two independent EHV power sources, probably 345 kV or higher voltage lines.
- Power and water for construction activities will be available at the site boundary.
- Communication lines will be provided at the site boundary.

- A sanitary sewage system will be available for tie-in at the site boundary.
- An auxiliary boiler, furnishing plant auxiliary steam, is included in the facility design.
- Plant utility systems including compressed air, inert gas storage and distribution, and potable and demineralized water are included in the facility design.
- Personnel parking will be located outside the facility perimeter close to the guard station that will control incoming and outgoing personnel, vehicles, and rail cars.
- Located in seismic zone 2.

Location at a site where a waterway is not available will require either advances in overland transportation techniques or the addition of on-site assembly facilities for the large components. At least two coil winding facilities will be required to permit winding the twelve TF coils and two large EF coils. Additionally, a few months would likely be added to the construction schedule to permit a full-up magnet test early in the reactor assembly sequence.

23.2 MODULAR CONSTRUCTION AND CONSIDERATIONS

STARFIRE is assumed to be the 10th of a kind power plant where modularization is used extensively and the design is standardized with module size and support methods fully defined. Equipment for handling these components is also assumed to exist and little site specific equipment will be required. This subsection discusses the potential for using modularization, whereby complete subsystem sections are either fabricated intact at a distant module assembly site, or are assembled at an uncongested location on the plant site. The approach described is also applicable to planning for transportation of heavy equipment by barge.

Factors that influenced the choice of the modular concept over conventional design and construction methods are primarily the desire to shorten the construction schedules, permit use of higher skill levels at the factory, improve productivity and improve quality control. Other factors that influenced the decision are:

- Unfavorable climatic conditions at the plant site prohibiting outdoor work for lengthy periods or significantly reducing manpower efficiency.
- Lack of skilled labor and supervisory personnel at or near the plant site.
- Highly congested work areas or stacked construction, e.g., the reactor building.
- High costs to procure and maintain skilled labor and supervisory forces at the construction site for an extended construction period.
- Lack of necessary construction equipment at or near the plant site, requiring its purchase, with the cost borne in full by the project.
- A construction schedule so abbreviated as to preclude a time-consuming program to train local personnel as construction craftsmen.

The module concept requires that the plant site meet specific conditions, principally related to the offloading and transporting of the modules to the site. A nearby waterway, of sufficient depth to accommodate loaded barges is required. If a dock with sufficient water depth is not available, construction of a dock in deeper water with a causeway to the shore or dredged channel is the preferred alternative. As a last resort, lightering may be considered, with modules and cargo capable of being lifted from barges by floating or barge cranes to light-draft barges for movement ashore.

Road conditions between the offloading area and the plant site, and the soil stability at the site must be suitable for loads imposed by crawlers and rubber-tired vehicles (RTV) while transporting modules. The distance from the dock area to the plant site may limit the use of crawlers; they are not normally designed for continuous service over great distances. Where RTVs must be substituted for crawlers, maximum permissible module weights will be reduced, with a corresponding increase in the number of modules.

Since it may not be practical to place the modules on the barges in strict accord with the construction sequence, sufficient land area near the offloading dockage will be required to temporarily store modules.

23.3 HANDLING AND SHIPPING CONSIDERATIONS

Ideally, the plant site would be located next to water. If not, the most feasible method of transporting heavy items and/or modules would be off-loading from barges and transporting the items via a highway route to the facility. Factors to be considered are:

- o Dredging may be required along the river bank and the barge slip or dock.
- o Construction of on- and off-ramps may be needed.

Review of the highway route is required to ensure unimpeded movement of large items, possibly involving:

- o Adding or strengthening bridges and culverts.
- o Providing temporary roads.
- o Temporarily raising or lowering of obstructing overhead wires.

Prior to receipt, loads can be removed from the barges and placed on heavy deck barges containing overland transportation equipment.

State-of-the-art hauling and lifting equipment capabilities are listed below. Loads anticipated for STARFIRE (maximum is 600 tonnes) are well within current state-of-the-art capabilities, as shown below:

- o Heavy lift ships - 545 to 727 tonnes
- o Roll on/roll off motorized barges - 1818 tonnes
- o Barges - depending on draft and strengthening of deck - 1500 to 2000 tonnes/module
- o Shore based derricks - 545 tonnes
- o Floating derricks - 545 tonnes
- o Hauling equipment - RTV, 1363 tonnes
  - crawler, 1818 tonnes
- o Cranes - Ringers, 545 tonnes
  - Transilift, 1363 tonnes
  - Guy derricks, 545 tonnes
  - Luffing booms, 909 tonnes
  - Tower, 364 tonnes
  - Bridge, 1273 tonnes

Projections of future hauling capacity for the year 2010 are at best very uncertain; however, it should be mentioned that even today there is a growing need for methods of transporting large equipment from factories to

construction sites. As the population increases, overland transportation will become more difficult and sites will be harder to find.

Large lighter-than-air ships have been proposed by several organizations.[1,2,3] Capacities of up to 1200 tonnes have been projected; however, fear of the vulnerability of these ships to weather conditions has generally restricted their acceptance. It should be remembered that past lighter than air ships have used early 1900's technology and substantial improvements in weather prediction have been made since then. In addition, structural improvements have made inflatable structures possible which permit deflation when a storm approaches. A United Kingdom group, Redcoat cargo lines, has recently placed orders for four airships for use in transporting cargo[4]. Further development of air ships may provide STARFIRE with an alternative shipping method and reduce the site selection constraints.

23.4 BALANCE OF PLANT SCHEDULE

This section provides the basis for and description of the proposed balance of plant schedule for STARFIRE.

23.4.1 Introduction/Summary

The conceptual balance of plant construction schedule (Fig. 23-1) is based on the drawings and descriptions generated for STARFIRE and the material quantities and equipment stated in the balance of plant cost estimate.

The schedule, focused on the activities of balance of plant construction and startup, identifies the time periods in which construction and startup are planned, and the time periods in which construction expenditures may occur for the conceptual design developed. It also identifies major milestones and control points for facility construction and startup activities.

The overall objective of the schedule is to produce a conceptual construction plan that defines major project schedule parameters including determination of the total time required for plant construction and the identification of pacing items.

The schedule presented compares favorably with current day power plants. Union Electric is currently building the Callaway PWR plant on a six year

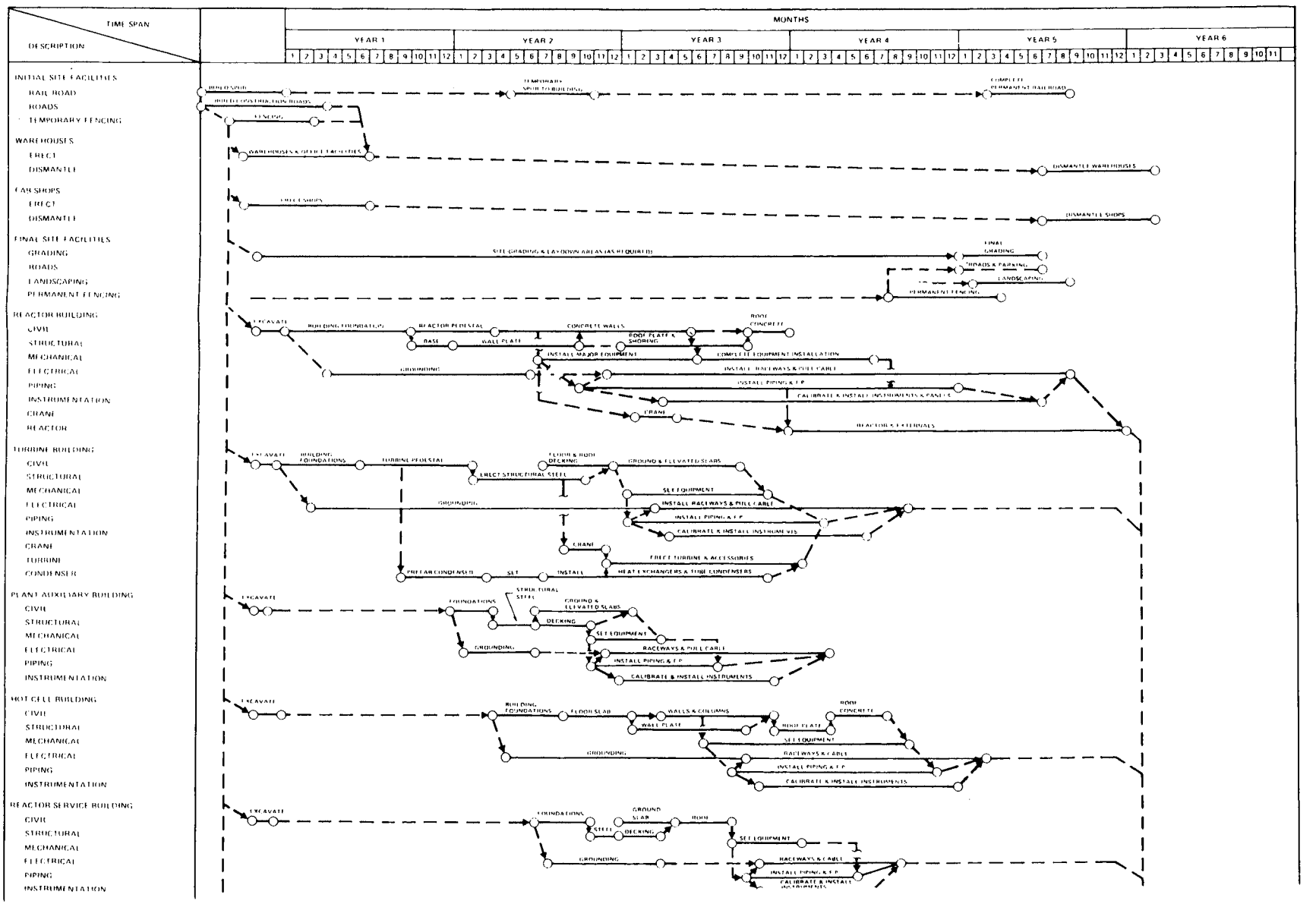
TIME SPAN
DESCRIPTION
MONTHS
YEAR 1
YEAR 2
YEAR 3
YEAR 4
YEAR 5
YEAR 6
INITIAL SITE FACILITIES
RAIL ROAD
ROADS
TEMPORARY FENCING
WAREHOUSES
ERECT
DISMANTLE
CAR SHOPS
ERECT
DISMANTLE
FINAL SITE FACILITIES
GRADING
ROADS
LANDSCAPING
PERMANENT FENCING
REACTOR BUILDING
CIVIL
STRUCTURAL
MECHANICAL
ELECTRICAL
PIPING
INSTRUMENTATION
CRANE
REACTOR
TURBINE BUILDING
CIVIL
STRUCTURAL
MECHANICAL
ELECTRICAL
PIPING
INSTRUMENTATION
CRANE
TURBINE
CONDENSER
PLANT AUXILIARY BUILDING
CIVIL
STRUCTURAL
MECHANICAL
ELECTRICAL
PIPING
INSTRUMENTATION
HOT CELL BUILDING
CIVIL
STRUCTURAL
MECHANICAL
ELECTRICAL
PIPING
INSTRUMENTATION
REACTOR SERVICE BUILDING
CIVIL
STRUCTURAL
MECHANICAL
ELECTRICAL
PIPING
INSTRUMENTATION
DISMANTLE WAREHOUSES
DISMANTLE SHOPS
FINAL GRADING
ROADS & PARKING
LANDSCAPING
PERMANENT FENCING
EXCAVATE
BUILDING FOUNDATIONS
REACTOR PEDESTAL
CONCRETE WALLS
ROOF CONCRETE
BASE
WALL PLATE
ROOF PLATE & SHORING
INSTALL MAJOR EQUIPMENT
COMPLETE EQUIPMENT INSTALLATION
GROUNDING
INSTALL RACEWAYS & PULL CABLE
INSTALL PIPING & E.P.
CALIBRATE & INSTALL INSTRUMENTS & PANELS
CRANE
REACTOR & FEEDRODS
EXCAVATE
BUILDING FOUNDATIONS
TURBINE PEDESTAL
FLOOR & ROOF DECKING
GROUND & ELEVATED SLABS
ERECT STRUCTURAL STEEL
SET EQUIPMENT
GROUNDING
INSTALL RACEWAYS & PULL CABLE
INSTALL PIPING & E.P.
CALIBRATE & INSTALL INSTRUMENTS
CRANE
ERECT TURBINE & ACCESSORIES
PREFAB CONDENSER
SET
INSTALL
HEAT EXCHANGERS & TUBE CONDENSERS
EXCAVATE
FOUNDATIONS
STRUCTURAL STEEL
GROUND & ELEVATED SLABS
DECKING
SET EQUIPMENT
GROUNDING
RACEWAYS & PULL CABLE
INSTALL PIPING & E.P.
CALIBRATE & INSTALL INSTRUMENTS
EXCAVATE
BUILDING FOUNDATIONS
FLOOR SLAB
WALLS & COLUMNS
ROOF CONCRETE
WALL PLATE
ROOF PLATE
SET EQUIPMENT
GROUNDING
RACEWAYS & CABLE
INSTALL PIPING & E.P.
CALIBRATE & INSTALL INSTRUMENTS
EXCAVATE
FOUNDATIONS
GROUND SLAB
STEEL
DECKING
ROOF
SET EQUIPMENT
GROUNDING
RACEWAYS & CABLE
INSTALL PIPING & E.P.
CALIBRATE & INSTALL INSTRUMENTS

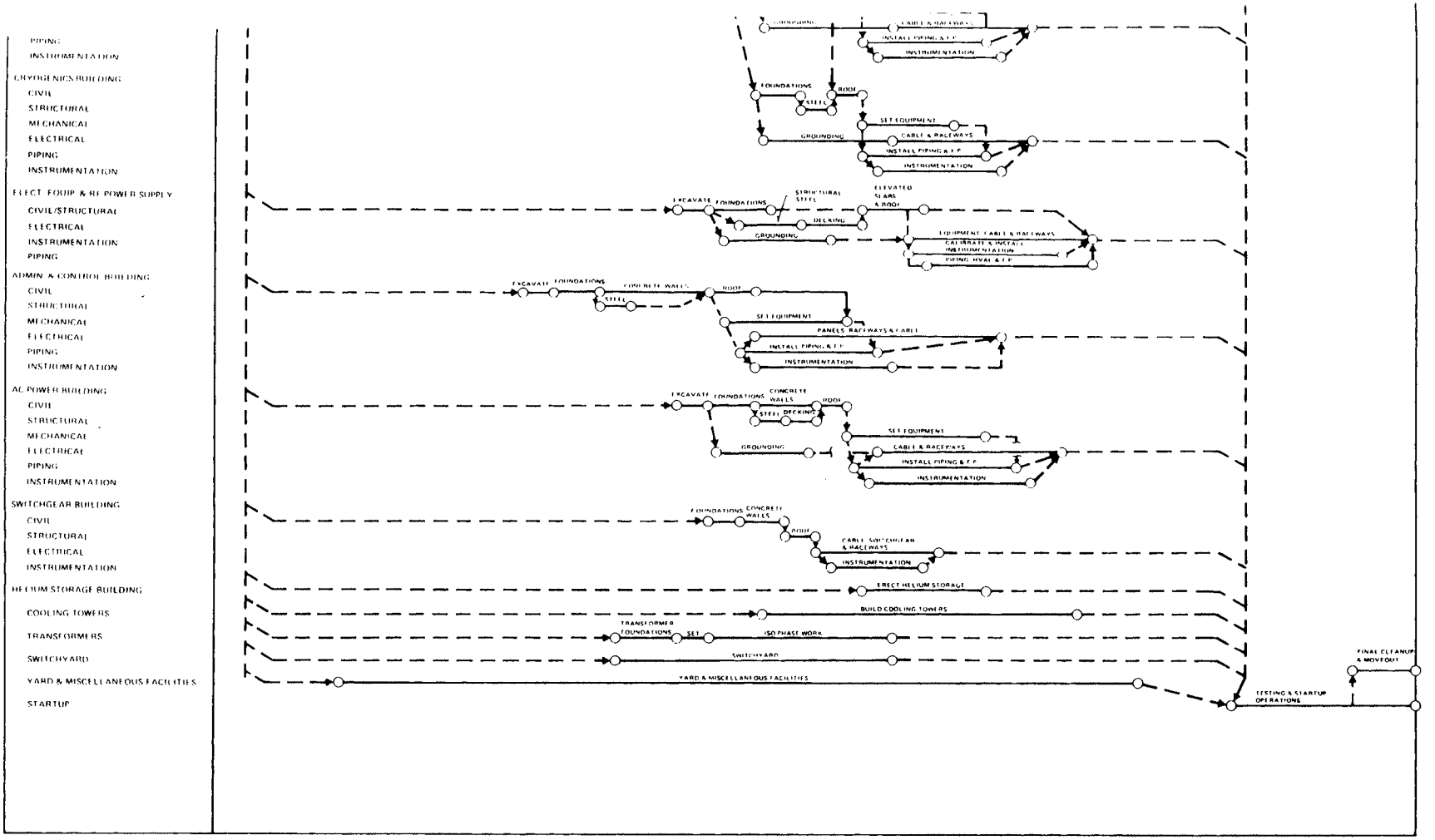

Figure 23-1. Plant construction schedule.

schedule. Union Electric suggests that the Callaway Plant could possibly be built in five years but that the six year schedule was easier to manage and contained provisions for unforeseen schedule slippage[5]. The additional subsystems required for STARFIRE would imply the need for a longer schedule; however, by 2010, improvement in construction methods, simplification of wiring requirements by multiplexing, modularization of components and an emphasis on factory assembly, checkout, and shipment to the site are expected to contribute toward time savings. We have estimated that STARFIRE could be constructed in approximately six years.

23.4.2 Schedule Assumptions and Basis

The following assumptions were made in establishing the schedule durations and sequences:

1. Schedule durations are based on optimistic times derived from current schedule and procurement times representative of large nuclear power plant projects. The schedule also assumes multiple shift operation, maximum level of effort, and total commitment to the project. No schedule contingencies are included.
2. The balance of plant drawings and descriptions, Chap. 20, cost estimate quantities, Chap. 22, and the anticipated reactor installation sequence, Fig. 23-2, are the basis for the schedule.
3. The schedule starting point indicates where facility construction essentially starts after a construction permit is approved. The reactor engineering and development interfaces are completed in sufficient detail to allow the plant construction to start.
4. The site has been preselected and acquired, and basic site data is available at the start of the schedule.
5. Environmental studies and licensing activities are not included and as such are not shown as schedule constraints.
6. The schedule format used is a milestone bar chart giving major construction durations for each building. The systems and major equipment are identified for each building in Sec. 23.4.4. The time scale is in years by months, with major blocks of work sequenced and identified. Startup activities are also identified.

7. The TF, EF, and OH coils will be fabricated offsite in a central component assembly facility and erected in the reactor building in parallel with reactor building construction.
8. Special temporary crane equipment will be provided to handle coils and other heavy items and to assist with their installation. Fabricated coils will be available for installation as completed and placed in position in the reactor building.
9. The 600-tonne reactor building crane will be available to assist in reactor assembly and installation.
10. Reactor installation will proceed with the reactor end of the reactor building open and the roof slab at that end of the building in place.

To determine the construction time for each major work scope item shown on the schedule, the lead times for the constituent items were considered. The pacing items determine the schedule duration for the overall work scope.

23.4.3 Site Development

Site development consists of initial and final site improvements as indicated below:

1. Initial site improvements:
   a. Local soils studies and mapping.
   b. Clearing, grading, and drainage.
   c. Temporary construction buildings, yards, and utilities.
   d. Temporary paving, parking, walks, curbs, and gutters.
   e. Road access.
   f. Railroad access.
   g. Utilities to perimeter of property (water, electricity, gas, sewer, phone, etc.).
   h. Temporary fire protection.
   i. Temporary utility, water, and electrical distribution.
   j. Construction security fencing.
2. Final site improvements:
   a. Yard piping, fire, and utility distribution.
   b. Yard electrical, distribution, and lighting.

2. Final site improvements: (cont'd)

c. Fire water storage.

d. Fuel oil storage.

e. Condensate transfer and storage.

f. Stack.

g. Sewage disposal system, piping, etc.

h. Security fence, alarms, and lighting.

i. Switchyard (substation) including control room.

j. Cooling towers.

k. Circulating makeup and blowdown water system.

l. Permanent roads, paving, parking, etc.

m. Finish grading.

n. Gas (helium) storage area.

o. Raw water reservoir.

p. Evaporation pond.

q. Service, main, and auxiliary transformers and transformer yard.

r. Water intake structure.

s. Railroad boundary inspection area.

t. Fire water loop.

u. Utility service, water, electrical, etc.

v. Landscaping.

23.4.4 Facility Buildings

To determine the construction times for the work scope items shown on the schedule, the major systems and equipment items were identified as a function of location in buildings, and the lead times for design, procurement, and construction were considered.

1. Reactor Building:

a. Reactor.

b. Foundation slab.

c. Walls to grade.

d. Walls above grade.

e. Roof slab.

f. Liner.

1. Reactor Building: (cont'd)

   g. Reactor support pedestal.

   h. Building services, HVAC, and fire protection.

   i. Piping and plumbing.

   j. Personnel and equipment hatches.

   k. Primary loop components.

   l. Other process modules.

   m. Atmospheric tritium cleanup systems.

   n. RF system components.

   o. Hangers, valves, fittings, insulation, etc.

   p. Piping, hangers, valves, fittings, insulation, etc.

   q. Electrical service, lighting, and communications.

   r. Instrumentation piping, conduit, and tubing.

   s. Building instrumentation and controls.

   t. Special doors and seals.

   u. Cranes and manipulators.

   v. Blanket module handling machine.

   w. Reactor shield door removal tools and fixtures.

   x. Hatches.

   y. Monorail track and switches.

2. Turbine Building:

   a. Footings and piers.

   b. Buried service water pipe.

   c. Duct runs.

   d. Base mat.

   e. Structural steel.

   f. Pit walls.

   g. Roofing and siding.

   h. Crane.

   i. Railroad spur.

   j. Turbine generator and accessories.

   k. Condensers.

   l. Component cooling water system.

   m. Air ejectors.

   n. Auxiliary steam boiler.

   o. Lube oil conditioning system.

2. Turbine Building: (cont'd)

   p. Demineralized water system.

   q. Heaters.

   r. Coolers.

   s. Condensate and feedwater system.

   t. Extraction steam system.

   u. Condensate demineralizer system.

   v. Condensate and feedwater chemical control.

   w. Turbine plant sampling system.

   x. Utilities, building services, and HVAC.

   y. Fire protection.

   z. Piping and plumbing.

   aa. Electrical bus distribution.

   bb. Electrical equipment.

   cc. Instrumentation and controls.

3. Plant Auxiliary Building:

   a. Structural (similar to the Turbine Building).

   b. Closed loop cooling system.

   c. Compressed air systems.

   d. Dryers.

   e. Machine shop.

   f. Freight elevator.

   g. HVAC system.

   h. Piping and plumbing.

   i. Electrical equipment.

   j. Instrumentation and controls.

4. Hot Cell:

   a. Structural (similar to the Reactor Building).

   b. Liner.

   c. Sliding shield doors.

   d. Monorail track.

   e. Turntables.

   f. Blanket inspection equipment.

   g. Blanket treatment and cutting equipment.

   h. Baking and outgassing equipment.

4. Hot Cell: (cont'd)
   i. Compaction and packaging equipment.
   j. Cranes and manipulators.
   k. Dry and wet storage.
   l. Reactor maintenance and repair equipment.
   m. Disassembly area.
   n. Atmospheric tritium cleanup systems.
   o. Liquid waste processing equipment.
   p. Decontamination equipment.
   q. Air lock.
   r. Piping and plumbing.
   s. HVAC equipment.
   t. Electrical equipment.
   u. Instrumentation and controls.
5. Reactor Service Building:
   a. Structural (similar to the Turbine Building).
   b. Equipment preparation and maintenance area.
   c. Spare parts storage.
   d. New blanket module storage.
   e. Piping.
   f. Electrical equipment.
   g. Instrumentation and controls.
6. Tritium Reprocessing Building:
   a. Structural (processing portion similar to the Reactor Building; remainder similar to the Turbine Building).
   b. Liner.
   c. Tritium processing equipment.
   d. Tritium and deuterium storage.
   e. Analytical laboratory equipment.
   f. Tritium control room.
   g. Atmospheric tritium processing equipment.
   h. Tritium waste treatment.
   i. HVAC equipment.
   j. Piping and plumbing.
   k. Electrical equipment.
   l. Instrumentation and controls.

7. Cryogenics Building:
   a. Structural (similar to the Turbine Building).
   b. Liquid helium and liquid nitrogen storage.
   c. Compressors.
   d. Cold box.
   e. Control room.
   f. Bridge crane.
   g. HVAC equipment.
   h. Piping and plumbing.
   i. Electrical equipment.
   j. Instrumentation and controls.
8. Electrical Equipment and RF Power Supply Building:
   a. Structural (similar to the Turbine Building).
   b. RF power supplies.
   c. EF trim coils energy storage.
   d. Coil power supplies.
   e. 13.8-kV switchgear.
   f. HVAC equipment.
   g. Piping.
   h. Wiring and cabling.
   i. Instrumentation and controls.
9. Administration and Control Building:
   a. Structural (similar to the Turbine Building, except for the control room, which is similar to the Reactor Building).
   b. Computer.
   c. I&C panels.
   d. HVAC equipment.
   e. Electrical equipment.
   f. Instrumentation and controls.
   g. Offices and conference room.
   h. Maintenance shop.
   i. Warehouse facilities.
   j. Bridge crane.

10. Onsite A/C Power Building:
    a. Structural (similar to the Reactor Building).
    b. Gas turbines.
    c. Turbine generators.
    d. Bridge cranes.
    e. Control room.
    f. Battery room.
    g. Piping.
    h. Electrical equipment.
    i. Instrumentation and controls.
11. Security Building:
    a. Structural (similar to the Turbine Building).
    b. Piping and plumbing.
    c. HVAC equipment.
    d. Electrical equipment.
    e. Instrumentation and controls.

23.4.5 Construction Plan

The overall construction schedule indicates a duration of about 72 months, including 12 months for testing and start up operations, paced by the anticipated 24-month period required for the reactor installation and assembly sequence. Installation of TF and EF coils will proceed in parallel with reactor building construction. It is assumed that these large coils will be fabricated and delivered in a sequence that meshes with the time-frame required for their installation in the reactor building.

It is assumed that the reactor engineering design conducted prior to the start of the schedule will provide the firm engineering design criteria defining all reactor/A-E interfaces essential for initiation of A-E work. An additional assumption is made that the site is preselected and acquired, and that basic site data is available. The schedule is also developed on the basis that licensing activities do not impose additional constraints.

A 52-week procurement lead time prior to start of reactor and major equipment assembly is anticipated. The preliminary design of site specific

items for the reactor building, turbine and support building, and the electrical equipment and rf power supply building must start about 18 months before procurement begins, to provide timely construction start of the buildings. This timing will allow installation of reactor equipment such as TF and EF coils to proceed in parallel with minor building construction. Facility design data is also needed to support overall site planning.

Excavation for the reactor building, turbine and support building, plant auxiliary building, hot cell, and reactor service building will proceed in that order, for optimum use of construction equipment.

During the 18-month period prior to reactor building equipment installation, only preliminary engineering will be done on the other site facilities to provide data for total site planning.

In order to keep capital investment as low as possible during the reactor building, turbine and support building, and electrical and rf power supply building construction, the other site facilities will be constructed later, more in line with actual need. The schedule is also predicated on the availability of certified craftsmen to meet required codes and standards.

The outlying buildings, pump houses, and cooling towers have been scheduled to allow optimum usage of construction equipment and to allow adequate access and manpower production.

A pass-through opening will be left in the reactor end of the reactor building during construction. This will be closed up after all equipment is installed, tested, and accepted.

Startup will be initiated in the sixth year, after completion of the reactor building and the turbine and support building. Startup data will be available to complete the operating procedures.

Underground major construction such as circulating water piping in heavily traveled areas will be completed during the latter portion of the schedule to avoid potential damage during installation of major equipment in the reactor building and turbine building.

Significant potential impacts on the construction schedule are the large quantities of bulk materials and the number of large modules and major

equipment items. Adequate lead times and initiation of procurement of these items early in the construction phase will be required.

23.5 REACTOR INSTALLATION AND SCHEDULE

This section presents the approach to reactor installation and construction schedule, Fig. 23-2. Delays in reactor assembly have a significant impact on plant costs since reactor assembly occurs late in the overall plant installation when most of the capital outlay has been made. STARFIRE has been designed to minimize the field construction time by designing components as modules that are manufactured off-site and fully tested prior to shipment to the reactor site. Shipment to the site by water is planned for the heavier components; however, by the projected construction date other means of transporting large heavy components may be available.

Major Assumptions -- The installation approach and schedule have been developed based on the following major assumptions.

- The STARFIRE reactor is the tenth of a standardized plant design to be constructed and the majority of the reactor construction crew has gained experience from previous plant construction. Three shift operations without labor strikes are assumed.
- All components are preassembled at a factory and are subjected to all necessary functional tests. Because confidence has been developed in the design and handling of the components, a minimum of field testing is required. Factory tooling is used to make parts that are interchangeable and matched tooling is provided to the construction site for use in locating all major interfaces (e.g., module connections, mounting base.,etc).
- Parts are delivered on time.
- Plant construction has progressed until the reactor building roof is installed. The reactor end of the building is left open and temporary crane rails protrude into a temporary construction enclosure (see figure 23-3) to permit heavy component installation. As one component is being set in place at the reactor, the next component is positioned under the crane way with all hoisting equipment installed. Access to the reactor building is available through the hot cell airlock for movement of smaller components such as equipment modules.

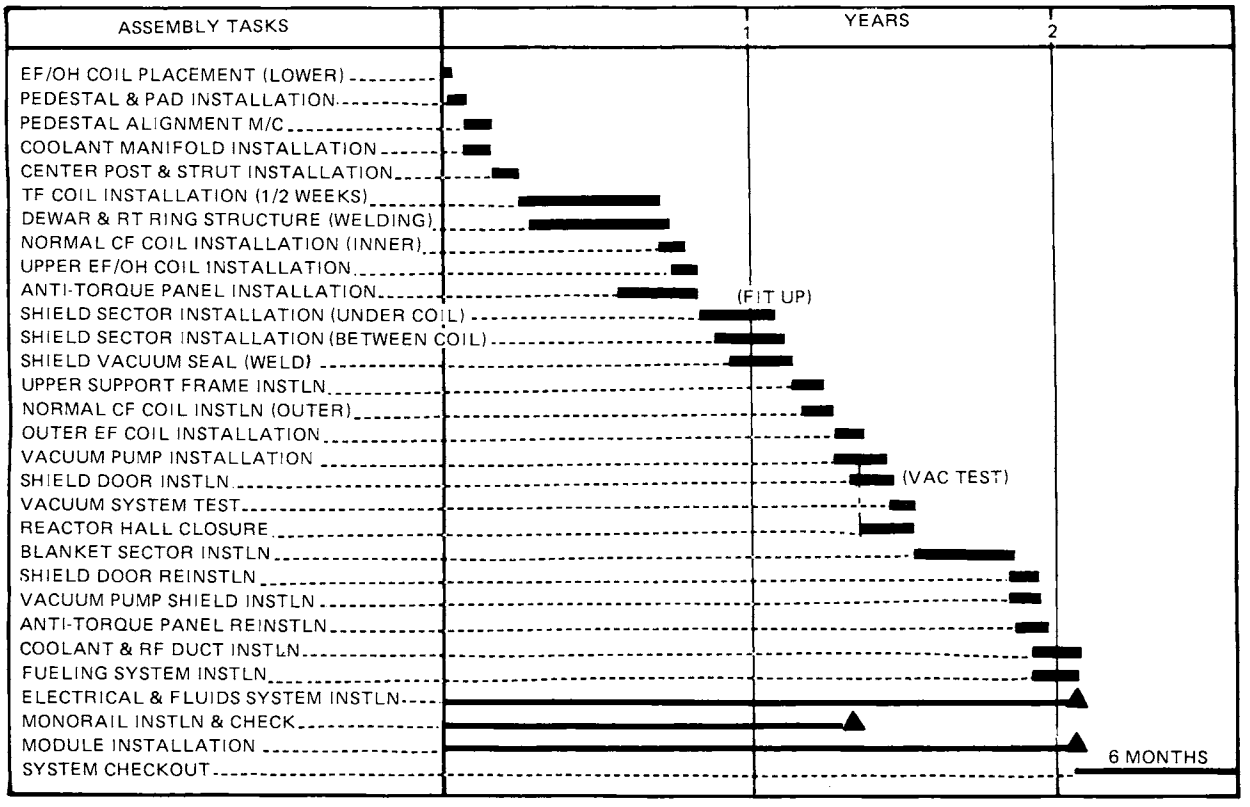

Figure 23-2. Reactor construction schedule.

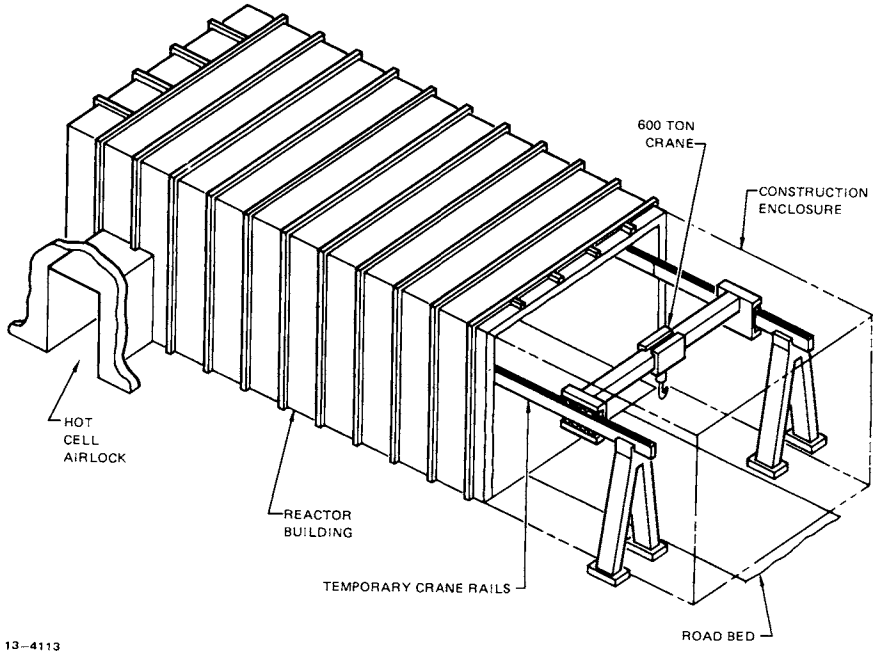

Figure 23-3. Reactor building provisions for reactor construction.

Installation Sequence -- Twenty-four months of installation time and six months of test and calibration are projected. The test and calibration time overlaps the balance of plant checkout. The reactor subsystem modules, electrical wiring and piping, and monorail equipment are installed in parallel with the erection of the reactor. Most of this equipment is brought in the building through the hot cell airlock and does not interfere with reactor erection. The installation of the monorail around the reactor will be coordinated with pedestal and TF coil construction by working diametrically opposite from where most reactor assembly is occurring.

Pedestal and Pad Installation -- A base plate and 12 TF coil support pads (Fig. 23-4) are mounted on the reactor building floor to provide support for the reactor assembly. The base plate is premachined and includes support lugs for the center post thermal isolation struts and a flange to provide the welded TF coil common dewar vacuum boundary. The pad is leveled by "floating-in" on epoxy or other material which hardens to provide a solid base. The base plate then provides a reference for location of the 12 TF coil support pads which are attached to the building floor. Each pad is then machined to the proper elevation and a radial groove is machined in each pad to provide angular alignment for the TF coils.

Two spare EF/OH coils are positioned around the center base plate and the operational coil is attached to the base plate. The spare coils are provided because of the number of components that must be removed to permit replacement in event of the failure of the operational coil. The ring manifolds around the reactor base are also laid in position by the overhead crane. Time required for installation of the pads, EF-OH coil and ring manifolds is estimated at two months.

Center Post Installation (Fig. 23-5) -- Prior to installation of the center post, a multilayer insulation blanket and liquid nitrogen shield is installed over the base plate to minimize heat leakage to the cryogenic coils. The base plate support lugs protrude through the insulation.

The center post is prefabricated at a factory and comes complete with a thermal isolation strut system that has been prealigned to match the base plate lugs. The EF and OH coils that fit inside the center post are installed

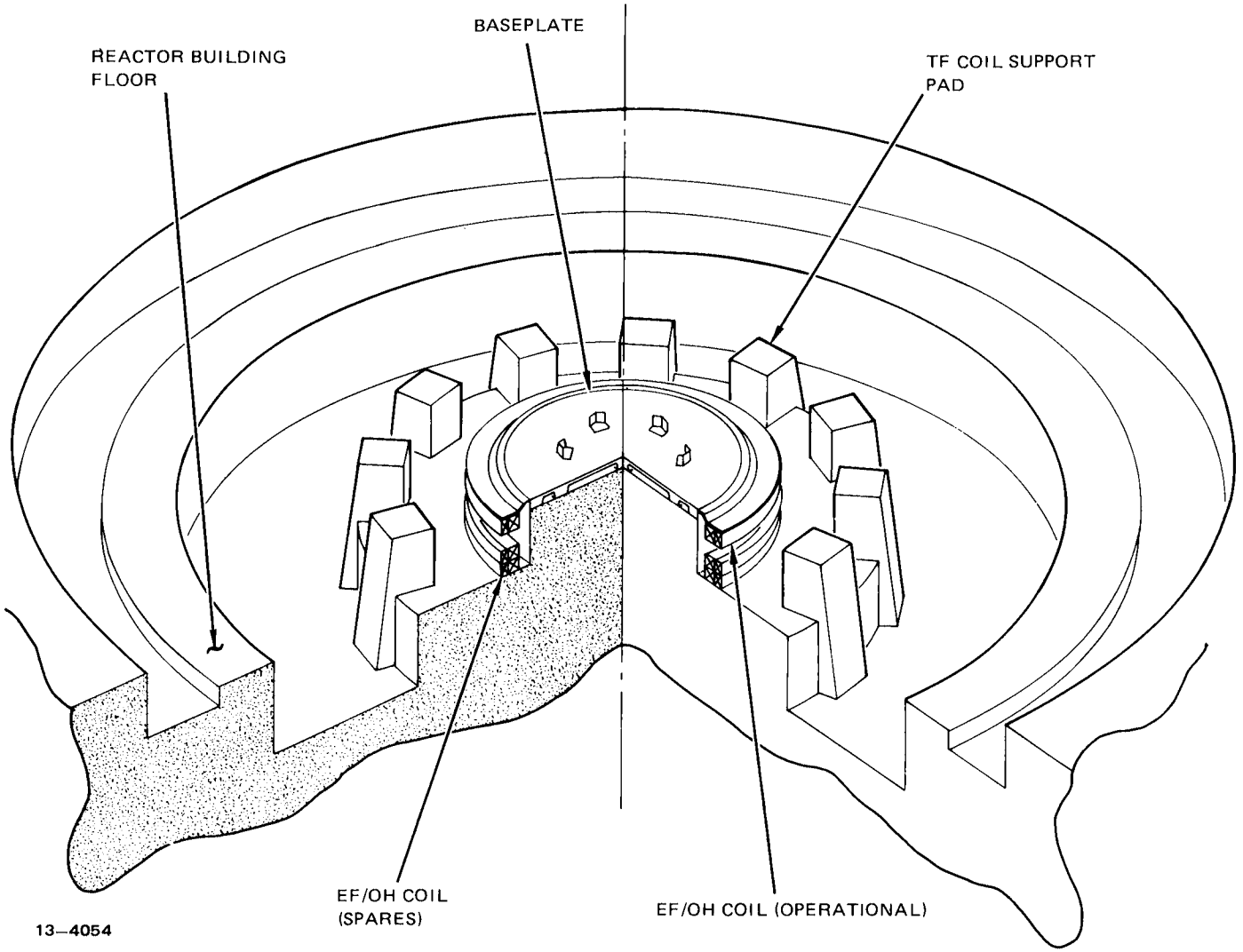

Figure 23-4. Reactor pedestal installation.

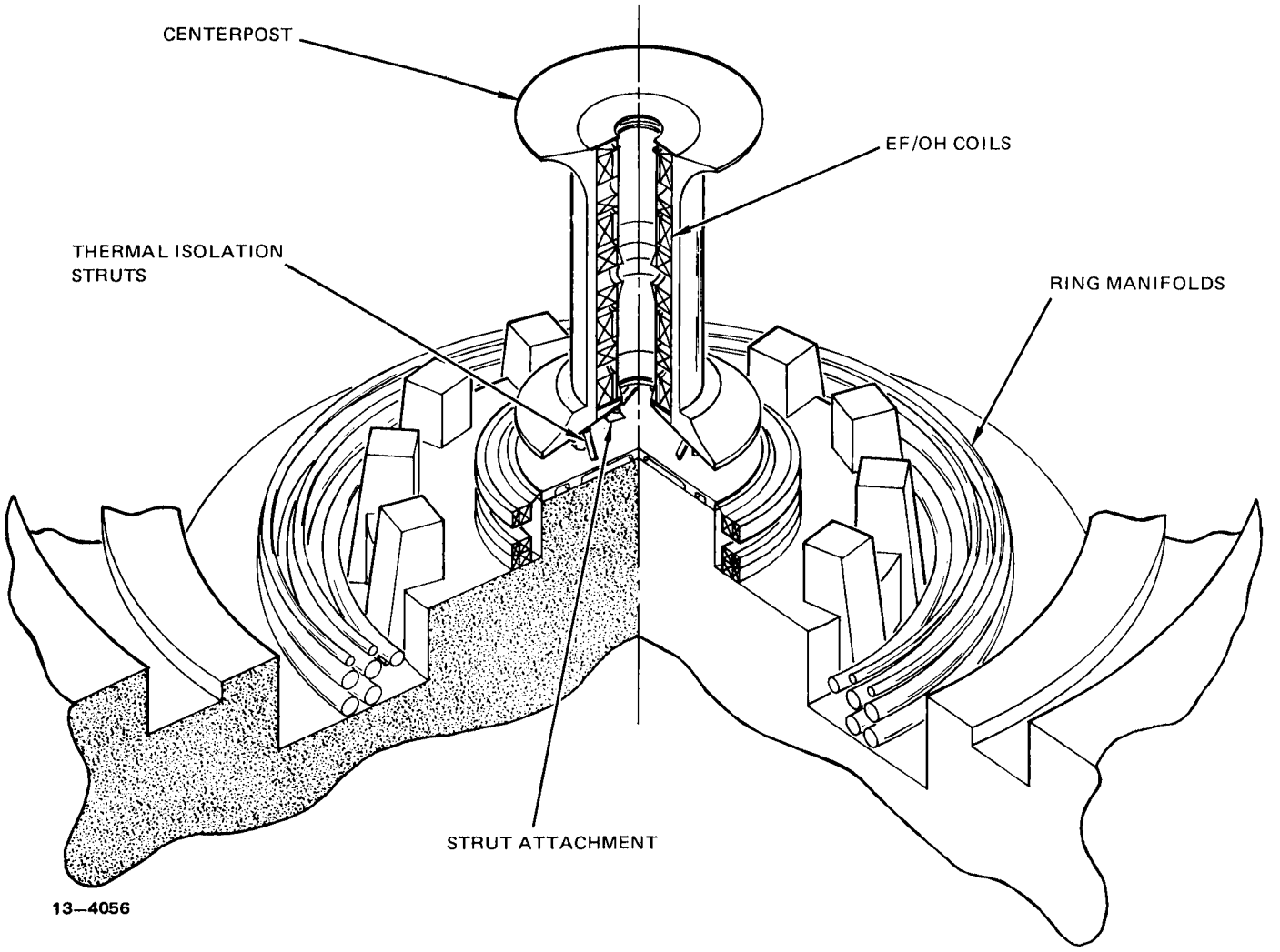

Figure 23-5. Centerpost installation.

prior to its installation into the reactor building. The center post weight is 224 tonnes and the combined coil weights are 282 tonnes. The overhead crane hoists the 506 tonne unit into place and holds it while clevis pins are installed through the strut clevis and baseplate lugs.

After centerpost installation, a location check is made to assure that proper alignment has been achieved before proceeding to the more complex assembly operations. Notches in the center post align with the machined groove in the TF coils support plates and provide definition of the TF coil mounting plane. Support tooling is installed under the center post to prevent deflection of the struts by asymmetric loading during TF coil installation. In conjunction with this activity, the ring manifolds for the blanket, shield and limiter coolant systems are installed, and welded in the well provided around the pedestal.

TF Coil Installation (Fig. 23-6) -- The TF coil installation sequence is overlapped with installation of the copper CF coils and anti-torque panels. Full field tests of the coils are performed in a test stand at the factory prior to shipment. Minimal inspection is required at the construction site. The overhead crane hoists a 583 ton TF coil in place by lifting the room temperature vacuum tank. The helium vessel deflects downward with respect to the room temperature vacuum tank by approximately 1 cm. (The TF coil supports are much more rigid in the out-of-plane direction). The 1 cm deflection permits the TF coil to be positioned against the center post and attached before the outer vacuum tank is bolted to the support pad. The outer vacuum tank is positioned radially, so the common dewar vacuum tank lines up with the base plate flange, and is then bolted in place at the outer support pad. Each TF coil vacuum tank includes a support base and two attachment points for the shield that has been located with respect to the three groove support points and the common dewar vacuum tank flange. Three days of crane use are allotted for setting each TF coil in place.

After the second TF coil is set in place the common dewar between coils is seal welded while the third coil is positioned. After four TF coils are in place the first segments of the inner upper and lower CF coils are installed. A small construction hoist is used for the operation. This

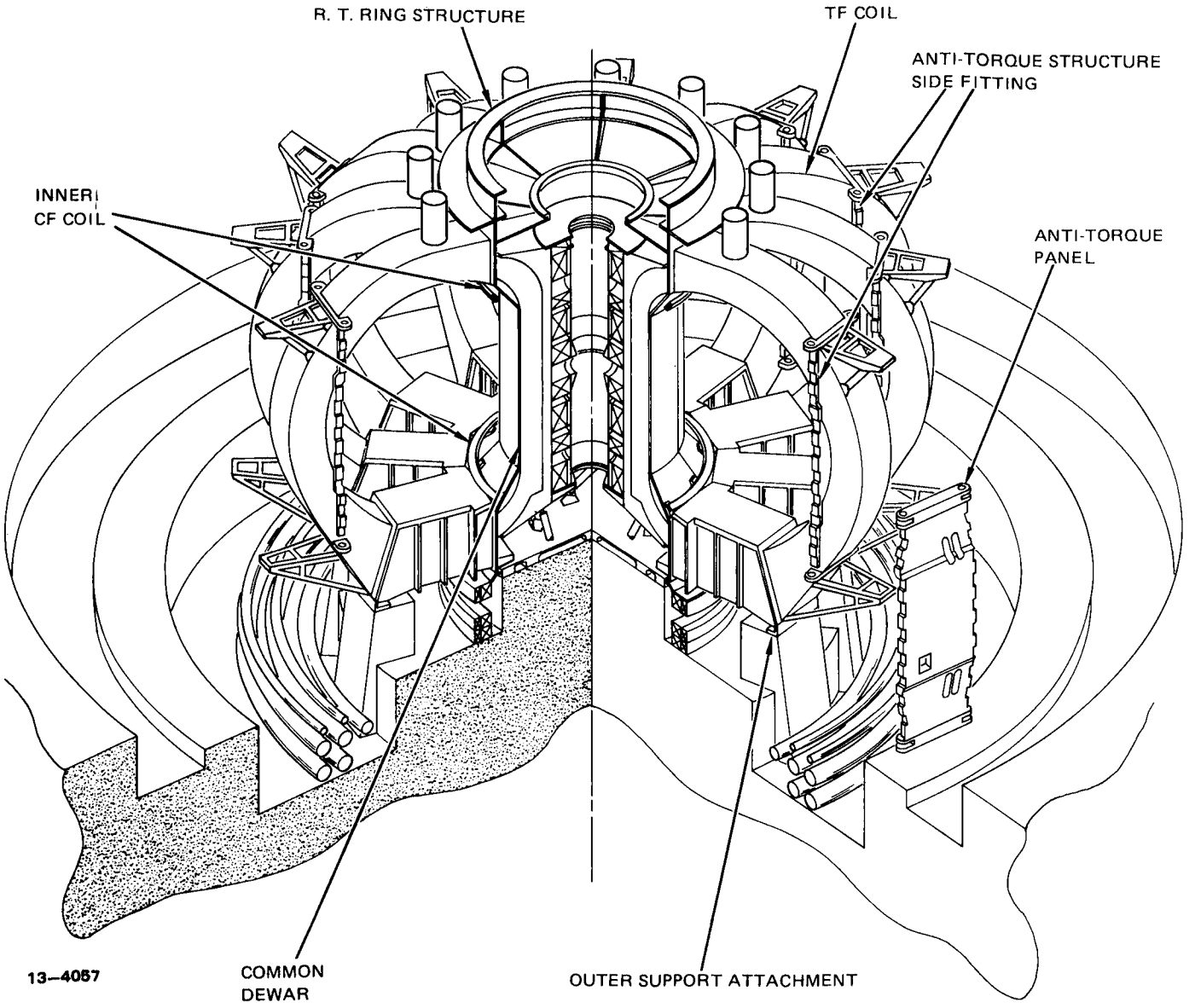

Figure 23-6. TF coil installation.

procedure continues until all TF coils are installed. While the final TF coil dewar welds are being made the overhead crane is available for approximately one month to install process modules in other parts of the building. The liquid nitrogen shield and superinsulation are installed over the center post and the cryogenic and electrical leads are connected. Finally the room temperature ring structure is installed at the top of the center post and welded to provide the final TF coil vacuum closure. A temporary vacuum pump down system is used for leak testing.

Anti-torque Structure Installation (Fig. 23-6) -- The anti-torque structure must be fitted between TF coils after their installation because of the need for precise fit and because it is unlikely that the structural surfaces of the room temperature TF coil case can be located accurately without excessive cost. Slight warpage could prevent the anti-torque structure from fitting. The structural panel and side fittings are installed between TF coils as an assembly and the side fittings are shimmed and fastened in place. The operation utilizes the dedicated maintenance equipment and monorail system to hold the panel in place while it is installed.

Shield Installation (Fig. 23-7) -- The small shield sectors are installed while the TF coil dewar leak testing is conducted. Access to the dewar welds is available with the small shield sectors in place. Each small sector is hoisted into place sequentially by the overhead crane and attached to the upper and lower support points on the TF coil room temperature dewar. After two adjacent small sectors are installed, a large sector is installed complete with the shielded vacuum ducts. Support is provided for the vacuum ducts by the hoisting equipment until it is in position against the floor bracket and overhead frame. The shield door is not installed at this time to keep the total component weight to less than the 600 tonne crane capacity. The internal seal weld between shield sectors is made by a separate work crew which uses automatic welding equipment mounted to tracks on the inside surface of the shield. All shield seals are tested at installation using the built-in leak detection feature of concentric seals (see Sec. 19.3.2). Shield access doors, with plugs in coolant line apperatures, are installed after leak detection of the sector joint welds is complete.

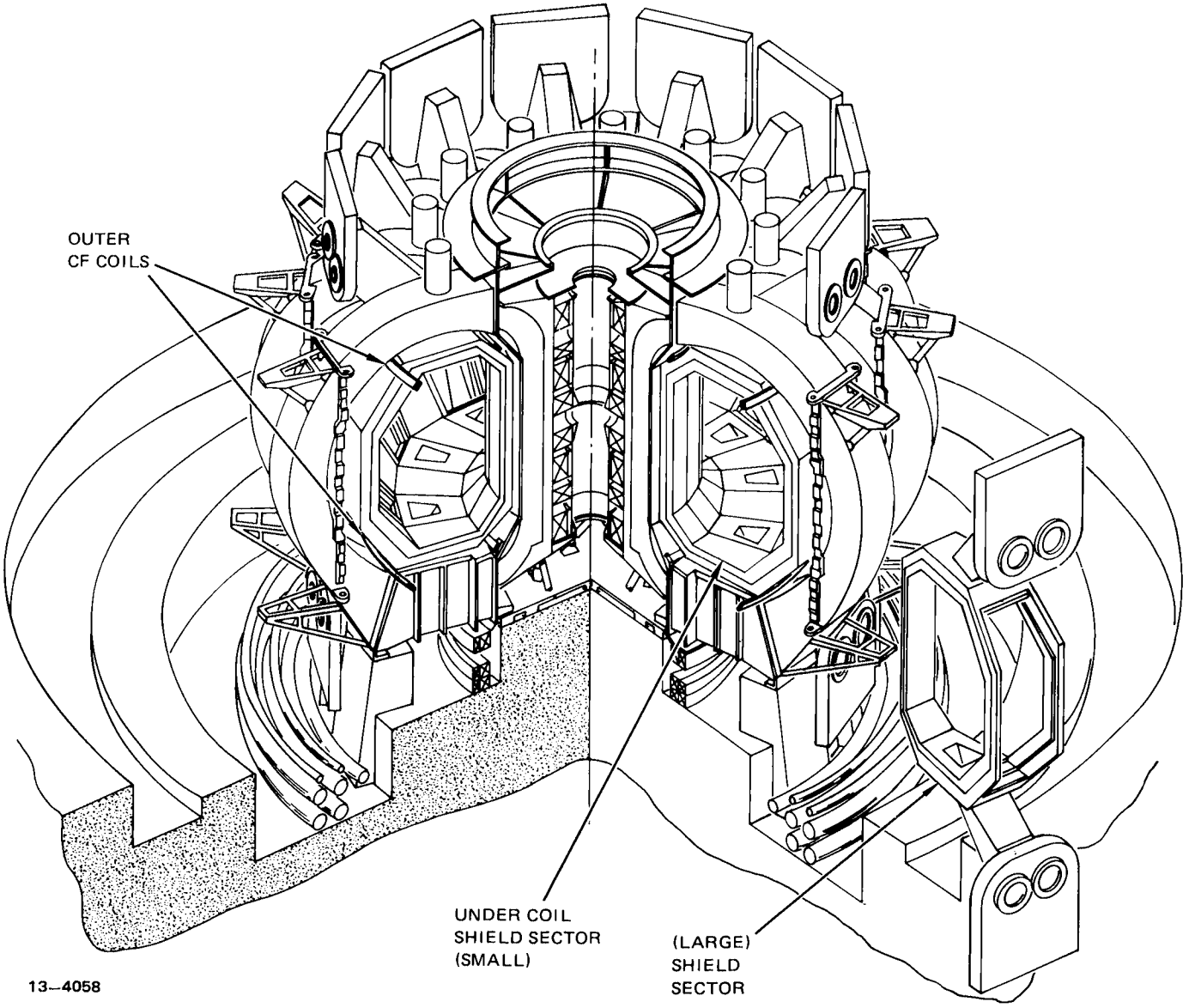

Figure 23-7. Shield installation.

Outer copper (CF) coil segments and lower vacuum pumps and valve installation and service line hook up to the shield sectors vacuum pumps and valves, and CF coils begins sequentially with sector installation.

Overhead Frame and EF Coil Installation (Fig. 23-8) -- Prior to installation of the overhead support frame, the upper EF/OH coil is installed to the TF coil common dewar using the overhead crane. Next, the overhead frame which has the upper EF and TF coil dump resistors and switches mounted to it is assembled to the common dewar. The overhead crane is used to install the two large EF coils to the TF coil room temperature structure. After EF coil installation, the upper vacuum pumps and valves are installed at the top of the reactor using auxiliary equipment. Upon completion of magnet and pump installation, all cryogenic lines and electrical leads are installed.

Vacuum System Test -- After completion of the vacuum boundary welding, it is necessary to thoroughly clean the chamber interior and perform and initial vacuum pumpdown. The pumpdown will utilize the reactor vacuum pump system. It is planned that most heavy construction in the reactor building will be complete at this time and the permanent reactor building wall can be installed. Vacuum pump shield pod covers are installed after the vacuum system test.

Blanket Sector Installation (Fig. 23-8) -- After the vacuum system tests, the shield doors are removed and blanket sectors are installed. It is planned that the monorail maintenance equipment will be used to handle the blanket sectors. Extra machines will be used as necessary to install two blanket sectors simultaneously.

Each blanket sector will be installed complete with rf duct and cooling line connections, and located by fittings installed in the shield sectors. A circumferential V-rail and stop is provided for the blanket sector inside the TF coil, and a radial V-rail and stop is provided for the blanket sector between TF coils.

Vacuum wall closure is finalized by installing the shield access doors and actuating mechanisms to make the seal on rf duct and coolant line plugs. The monorail equipment is used to install the shield door and the anti-torque

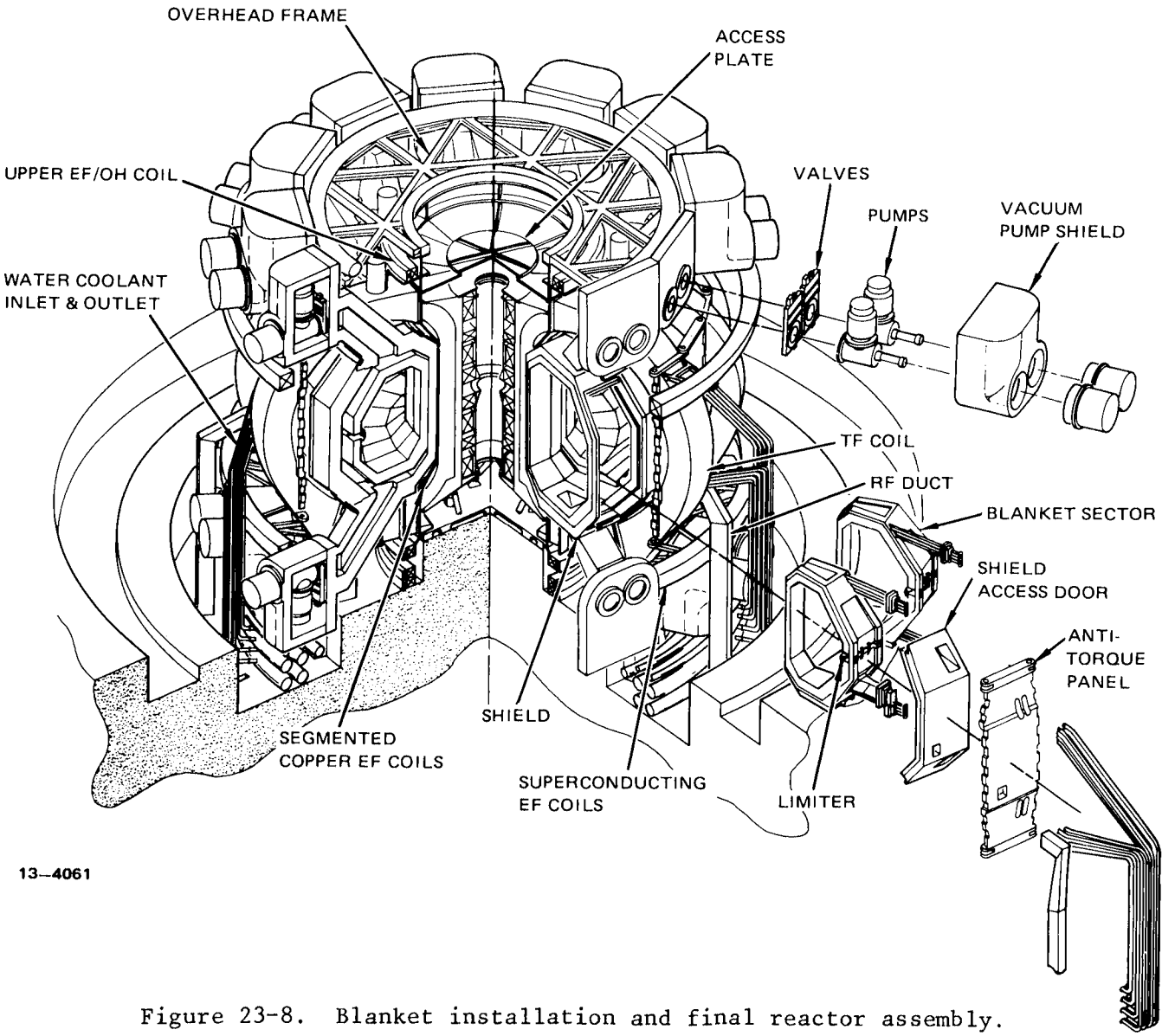

Figure 23-8. Blanket installation and final reactor assembly.

panels. After rf duct and coolant line elbow installation, the reactor is ready to begin the initial checkout operations that are included in the plant checkout process.

23.6 DECOMMISSIONING

The decommissioning of a commercial fusion reactor (CFR) is expected to show no insurmountable problems. All phases of disassembly and removal of the reactor are expected to be less difficult than that associated with present-day nuclear reactors. This factor stems from the character of the STARFIRE reactor and its built-in and associated maintenance capabilities which allow for normal remote removal and replacement of any reactor component or structure. This feature is complementary to decommissioning. In addition, the design of the shield of STARFIRE emphasized low radioactive inventories and segregation of activated materials which will reduce the problems of decommissioning. Almost all of the induced radiation is of low specific radioactivity. The bulk of materials may be easily handled for storage purposes, and because most are in solid form, are not easily dispersed. The plant is initially equipped for breaking down the massive components (e.g., shield sectors, TF coils, etc.) to appropriate size for shipment. Facilities are included for disassembly and transporting components to points where dissection may be done with maximum convenience.

For most of the reactor disassembly and packaging of radioactive materials and parts, the normal facility operating crew (reactor, hot cell maintenance, etc.) reduced to the day shift quota could probably perform this function in an 18 month period. Concurrent with this activity, other buildings and structures (e.g., turbine, cryogenic, electrical, etc. could be dismantled. A second interval of decommissioning of the reactor hall, hot cell and tritium reprocessing facilities would follow in a period of twelve to sixteen months leaving the facility in the "green grass" state unless it is desired to replace the facility with an updated power plant.

In conclusion, the STARFIRE facility can be readily decommissioned using self-contained equipment for disassembly of all radioactive parts and standard techniques for remaining structures. A period of less than three years is anticipated with no further development work required.

References

1. Feasibility of Modern Airships - Preliminary Assessment, M. D. Ardena, Journal of Aircraft, Vol. 14, Nov. 1977.

2. The Airfloat HL Project, E. Mowforth, Interagency Workshop on Lighter Than Air Vehicles, Monterey, CA, 9-13 Sept 1974.

3. The Skyship Project, Aircraft Engineering, Vol. 46, Dec. 1979, pp. 14-19.

4. "Redcoat Cargo Line Looks to Dirigibles to Cut Fuel Costs," Wall Street Journal, p. 16, 14 July 1980.

5. Personal Communication, R. Schukai, Manager Nuclear Serivces, Union Electric, 26 June 1980.

Table of Contents

		Page
A.1	INTRODUCTION AND SUMMARY	A-1
A.2	UTILITY ADVISORY GROUP FORMATION	A-4
A.3	EVALUATION CRITERIA	A-5
A.3.1	Cost of Electricity	A-7
A.3.2	Licensing	A-7
A.3.3	Reliability - A Quality Relating to the Performance of a Plant	A-8
A.3.4	Plant Availability	A-9
A.3.5	Cost/Generating Capacity	A-10
A.3.6	Tritium Inventory and Leakage	A-11
A.3.7	Maintenance Requirements	A-11
A.3.8	Construction Time	A-12
A.3.9	Operating Lifetime	A-13
A.3.10	Start-Up Requirements	A-13
A.3.11	Fuel Storage and Handling Requirements	A-14
A.3.12	Wall Life	A-14
A.3.13	Earliest Commercial Usage	A-15
A.3.14	Developmental Cost	A-15
A.3.15	Plant Efficiency	A-16
A.3.16	Unit Size (Net Power Rating)	A-17
A.3.17	Duty Cycle	A-17
A.3.18	Energy Storage	A-18
A.3.19	Waste Thermal Heat	A-18
A.3.20	Load Following Capacity	A-19

List of Figures

Number		Page
A.1	Summary of the STARFIRE utility Requirements	A-2

A.1 INTRODUCTION AND SUMMARY

A primary objective of STARFIRE has been to design a tokamak fusion power plant that was attractive to the utilities. To achieve this goal, several utility representatives were directly involved in the decision-making processes as the design evolved. Utility representatives from the eastern seaboard, the Midwest, the Northwest and California were selected to participate. This group provides a representative cross-section in terms of geographic location, size, climatic conditions, fuel mix, population density, customer mix and sociopolitical environment. Collectively, this group represents more than 60,000 MWe generating capacity with more than 20,000 MWe of operating or under construction nuclear capacity. The fuel mix for individual utilities, from the group, varies from 95% coal, 88% oil, 60% nuclear to an 80% dependence on hydro-electric. Their role has been to assist in developing utility requirements, to provide an initial set of design recommendations, to participate in the assessment of major trade-off study results, to serve as consultants throughout the study, and to provide a design review critique for reactor and plant systems which affect utility operations.

An initial step was to establish the relative importance to the utilities of an extensive list of economic, performance, safety and environmental issues. The top twenty issues are ranked according to mean value, in Figure A-1. The utility evaluators were requested to rate each of the factors on a scale of 1 to 10. Cost of electricity was clearly most important with very little spread in the ratings of individual evaluators. Licensing is a go/no-go factor and must be accomplished for the other factors to have meaning. The top nine factors were judged to be very important by all evaluators, as shown by the spread of ratings from 5 to 10. There is considerably more spread in the bottom eleven, which reflects a lack of consensus as to the relative importance of the evaluation factors. The factor with the greatest spread, rated both 10 and 1, was development cost, with some viewing it as very important since reducing the cost would expedite development while others viewed it as irrelevant to the utilities since the government is expected to bear the development costs.

Preliminary design concepts were developed and trade-off studies conducted, prior to convening the utility representatives in a workshop, to assist

SUMMARY OF THE COMMERCIAL TOKAMAK PROJECT UTILITY REQUIREMENTS

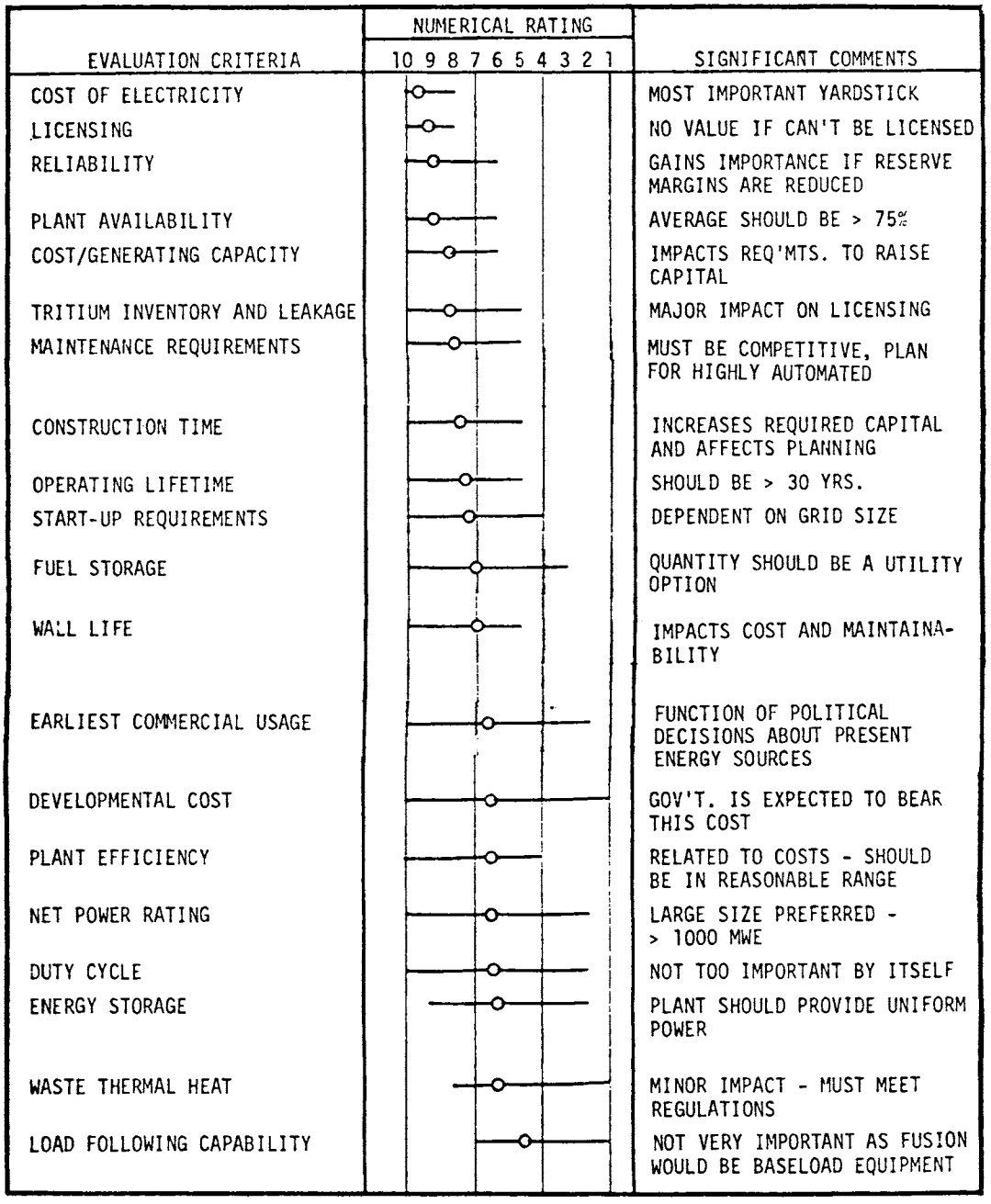

(a) — Bar denotes spread of values assigned by evaluators
o Circle denotes mean value

Fig. A-1. Summary of the STARFIRE utility requirements.

in defining the initial STARFIRE reference design. Comments and recommendations are shown below along with the implementation in STARFIRE, where appropriate:

- o Utility acceptance depends on developing reliable power at the lowest possible cost of energy. Fusion has a potential advantage in that costs are almost totally capitalized and therefore would be predictable in future years.
- o Utilities are experiencing, and project, growth rates averaging 4%.
- o New generating technologies will be accommodated by hiring the required expertise.
- o Economic studies are important as a means of identifying economic fatal flaws.
  - Detailed cost estimates were developed, see Section 22.
- o Unit generating capacities of up to 4000 MWth, 1250 MW(e) should be planned.
  - STARFIRE generates 4000 MWth and 1200 MWe (net).
- o Planning should be for a 30-year economic life and a 40-year design life.
  - Adopted in costing and design of STARFIRE.
- o At present a steam power conversion system is preferred.
  - Current PWR, with moderate modification, adopted for STARFIRE.
- o The reduction of field construction time and planning for standardized designs should be major goals.
  - Modular design and factory assembly/checkout of major assemblies expedite field construction time for STARFIRE.
- o Design for fully remote maintenance in the reactor hall.
  - Adopted for STARFIRE.
- o Prefer not to use liquid lithium as coolant because of perceived safety problems.
  - Water was selected as the coolant with a solid compound of lithium as the tritium breeder.
- o The primary concern in licensing will be tritium containment.
  - STARFIRE has incorporated triple containment where possible and minimized the vulnerable inventory of tritium.

After the conceptual design was further developed in concert with the utility inputs and prior to the detailed engineering phase, the utility representatives were again convened to critique the design. Their principal observations and recommendations are shown below:

- The steady state operation design of STARFIRE is a major step forward in utility acceptance of the tokamak.
- The STARFIRE maintenance concept with emphasis on modularization and factory assembly is endorsed as showing potential for significant cost savings.
- The quantity of reserve fuel on site should be a utility option.
  - In the interest of minimizing tritium inventory, STARFIRE has planned a small reserve to cover operations for two days. The quantity could be easily increased to meet the requirements of a utility.
- Geometry of blanket module should remain intact in the event of coolant flow loss.
  - External skin of a blanket module would maintain structural integrity.
- Personnel entry to the reactor hall should be allowed on a contingency basis and for retrofit.
  - STARFIRE is designed for personnel entry 24 hours after reactor shutdown.
- Recirculating power of 20% is acceptable.
  - STARFIRE recirculating power is 16%.
- Locate steam generator(s) within reactor hall.
  - STARFIRE steam generators are located in the reactor hall. This keeps the primary coolant totally within the reactor hall where remote maintenance is available.
- Plan to construct 2 or more units at the plant site.
  - STARFIRE costing is on the basis of a single unit at the plant site but it is readily recognized that multiple units would likely be constructed at most plant sites.
- Smaller unit capacity will likely be required for the introductory phase of fusion.
  - This is a significant point but STARFIRE is assumed to be the 10th commercial unit which would be built after the introductory phase.

A.2 UTILITY ADVISORY GROUP FORMATION

The approach was to bring utility representation into the project development process from widespread geographical regions of the United States to provide a mix of private and public utilities and a sampling of large and moderate sized utilities. Utilities from the eastern seaboard, the Midwest, the Northwest and California were selected for inquiry as to their participation in the study. This approach enabled STARFIRE to benefit from the inputs, review and assessment of several representative electric utilities in a more

comprehensive and credible way than the information furnished by a single utility could provide. There are approximately 3000 utilities in the United States, each with their own unique set of conditions. Approximately sixty of the larger utilities will eventually be the potential users of fusion base load power plants.

From the sixty larger utilities, several were selected and their participation requested in the study. Of the original eight utilities selected, five expressed willingness to actively participate and one utility agreed to provide some inputs to the study. Utilities which have participated to varying degrees in the advisory group are:

- Duke Power Company
- Northeast Utilities Service Company
- Pacific Gas and Electric
- Public Service Electric and Gas
- Union Electric Company
- Washington State

The purpose of the advisory group was to support the design project in the primary role of utility assessment. They assisted in developing the utility requirements, participated in the assignment of major trade-off study results and served as advisors, throughout the study, in a design review capacity for reactor and plant systems which impact the utility interface. The group provided a representative cross section on which the project could draw, in terms of geographic location, size, climate conditions, fuel mix, population density, customer mix and sociopolitical environment.

A.3 EVALUATION CRITERIA

To analyze and evaluate the merits of a commercial tokamak reactor, it is necessary to formulate evaluation criteria which are applicable to utility requirements. The ultimate goal of any commercial reactor is to provide a source of energy which is attractive to the utilities. In light of this, the evaluation criteria are slanted toward utility compatibility and acceptability factors (economic and performance oriented), along with the respective technical risk being reflected in the developmental costs and the earliest commercial usage data.

To illustrate the criteria considered most important for the commercial application of fusion power, a preliminary list of evaluation criteria was assembled. This list was intended to be brief enough to highlight the more significant factors, yet be able to encompass the important requirements. The relative importance of each of the criteria was to be indicated by the scoring value achieved by rating the criteria from 1 to 10 with 10 being the most important.

The requirements for evaluating a commercial tokamak were set into a questionnaire format outlining the specific categories and including a general category with room for additional criteria to be added by the advisors. A definition for each requirement as it pertained to the study was supplied. Each advisor was asked to rate each requirement and comment, if desired.

Responses were received from the following:

- Dr. Noel Amnerd - Electric Power Research Institute
- Mr. Clint Ashworth - Pacific Gas and Electric
- Mr. Fred Brunson - Union Electric Company
- Mr. Edward C. Fiss - Duke Power Company
- Dr. Robert Goodrich - Northeast Utilities Service Company
- Dr. Betty Jensen - Public Service Electric and Gas
- Mr. William C. Wolkenhauer - Washington State

The responses were compiled and the results showed the cost of electricity as the most important criteria, closely followed by licensing. The criteria were summarized in Fig. A-1. The criteria were ranked according to the mean rating. Section A.3 lists the criteria in order of their average rating, along with pertinent comments provided by the utility advisory group throughout the design development. Also shown is the STARFIRE response to the inputs. The criteria were not fusion unique but several criteria are sensitive to the requirements of fusion power plants; for example, cost/generating capacity, tritium inventory, maintenance requirements, startup requirements and energy storage.

A-3 EVALUATION CRITERIA

The criteria are listed in order of their importance.

A.3.1 Cost of Electricity (COE)

The unit cost of electricity is the mills per kilowatt hour of net power

Average Rating 9.5

Utility Comments:

- o Typically, a utility is required to furnish energy at the lowest possible cost of electricity.
- o Most important.
- o If this truly represented the actual COE, then it would be the most important. However, the availability of fusion plans is conjecture and the applicable environmental costs are unknown.
- o COE is a major yardstick used by utilities, engineering firms, and government regulatory agencies in judging justification of a power project, and in evaluating performance.
- o This is a go/no-go item. Cost need be only in the same ballpark as alternatives. If it has regulatory charisma, we can use it even if it costs double the alternatives provided the total capital required is not an undue strain.
- o COE for fusion power should be competitive with COE of other power sources which are or will be available in the same time frame. If one discounts "feasibility-type" requirements (technical feasibility, licensing feasibility, etc.), then the importance of all remaining requirements is determined by their impact on the cost of electricity.
- o Fusion has a potential advantage compared to current generating systems in that the costs are almost totally capitalized and would not be subject to the whims of 'cartel-like' operators. Future costs would be predictable.

STARFIRE Response:

Detailed cost estimates were developed and design changes were incorporated to reduce costs. The resulting design should be competitive with other energy sources in the future, although much cost optimizing needs to be accomplished (see Chap. 22).

A.3.2 Licensing

A licensed power plant must meet the requirements and regulations set by all applicable local, state and federal agencies for power plant operation which assures the health and safety of the public and which balances the

benefits of the electric power produced against the risk and environmental impact of the plants.

Average Rating 9.1

Utility Comments:

- o A plant which is not licensable is out of consideration. I don't think that one can rate an absolute go/no-go criteria.
- o Fully important and intertwined with cost, availability and construction time.
- o It is of no value if it cannot be licensed.
- o The design approach should be to minimize the potential hazard to operators and the public. It is insufficient to only consider existing regulations.
- o Failure to comply with regulatory requirements can result in stopping construction or terminating operation.
- o There is much more to public and political matters than "licensing.
- o The use of liquid lithium as a coolant is strongly discouraged. This avoids problems with respect to safety, design and supply.
- o Control and accounting of tritium will be the number one problem. Activated trace materials are also likely to be a problem.
- o Standardization of plant design would ease the licensing process.

STARFIRE Response:

Many features were incorporated into the design to enhance licensing. These include: solid breeding material and water coolant (no liquid metal), low tritium inventory and triple levels of tritium containment, totally remote maintenance in activated areas resulting in very low doses to plant workers, and the selection of low activation materials where compatible with other requirements.

A.3.3 Reliability - A Quality Relating to the Performance of A Plant

Reliability is measured by the forced outage rate portion of the plant availability factor.

Average Rating 8.8

Utility Comments:

- o Very important, especially with the decreasing reserve margins of the future.
- o This is a secondary effect which affects the cost/kWh.

- Modern LWR nuclear plants have average availability exceeding 75%, with forced outage rates less than 10%. This type of performance should be regarded as minimum acceptable.
- This is a go/no-go item. Reliability must be adequate or we won't use fusion power plants. It affects utilities more than just the effect on cost of electricity through availability. Forced outage time causes the next scheduled outage to slip thus complicating planning.
- Should be better than or equal to LWR.
- The use of redundant equipment to improve plant reliability will depend on the economic status and the pool relationship of the utility at the time of plant design/construction. It will be a business decision. Utilities rate the value of reliability differently as a function of their unique circumstances.

STARFIRE Response

The primary emphasis was on simplicity of design and provisions for ease of maintenance. It is recognized that much work and data will be required before the reliability of fusion reactors is assured. The scope of the STARFIRE study permitted only a limited assessment of the reliability of the plant design.

A.3.4 Plant Availability

The overall plant availability is calculated as the ratio of plant operating time compared to the elapsed time.

Average Rating 8.8

Utility Comments:

- This has a major impact on COE and general utility decision making.
- Modern LWR nuclear plants have average availabilities exceeding 75% with forced outage rates less than 10%. This type of performance should be regarded as the minimum acceptable.
- Go/no-go item. Availability must be adequate or utilies won't buy.
- Don't depend solely on one form of generation (fusion); diversify.
- A capacity factor of 70% is a good average. The plant needs an availability of approximately 80% to realize this.
- Reserve suffers when a big base plant is down. The utility pays a penalty when its reserve is below its requirement.

STARFIRE Response:

This study devoted a significant effort to developing the maintenance approach. Therefore we believe an availability of 75% is achievable. STARFIRE is assumed to be the 10th unit of a 'standard' design which eliminates many of the early problems through operating and design improvements along with the familiarity of utility personnel with fusion.

A.3.5 Cost/Generating Capacity

The capital cost of the power generating station with respect to the net power generated in units of dollars per kilowatt.

Average Rating 8.3

Utility Comments:

- Quite important, but the greater the portion of the energy cost related to capital costs, the more insensitive to inflation will be the future costs of energy.
- This affects the requirements to raise capital. However, the total cost/kWh is the real test of plant economics.
- Capital cost is the major component of COE for a nuclear plant. It must be kept in perspective.
- Cost per kilowatt is not important except as it impacts on cost of electricity. Total capital cost for a total net capacity is a Rating 10, go/no-go item. It is the ratio ($/kW) that is not important independently.
- This is not as important to public utilities as it is to private utilities because of the lower cost of capital to public utilities.
- Cost/generating capacity for fusion power should be competitive with cost/generating capacity of other power sources which are or will be available in the same time frame. If one discounts "feasibility-type requirements" (technical feasibility, licensing feasibility, etc.), then the importance of all remaining requirements is determined by their impact on the cost per unit of generating capacity.

STARFIRE Response:

See Cost of Electricity, A.3.1.

A.3.6 Tritium Inventory and Leakage

The tritium inventory and leakage is the amount of tritium maintained within the plant for fueling, which is replenished by tritium produced in the reactor, and the predicted release of tritium from the plant facility.

Average Rating 8.3

Utility Comments:

- Must be practicable from a personnel and public safety viewpoint, and must meet regulatory requirements. The actual quantity of fuel in reserve should be a utility option as a function of their unique set of conditions.
- Potentially a go/no-go problem.
- This may have a major impact on licensing and worker health.
- This will have a significant effect on the ability to license the plant.
- Reflected in economics and licensing.

STARFIRE Response:

A major emphasis of the design development has been to reduce inventory to as low a value as possible and to incorporate design features that make 90% of the tritium invulnerable to possible release and to triple confine the remaining 10%. Tritium leakage is expected to be less than 10 curies/day.

A.3.7 Maintenance Requirements

The scheduled maintenance requirements of the power generating station are planned on a yearly interval.

Average Rating 8.1

Utility Comments:

- Must be competitive with LWR's.
- Highly automated maintenance will be the trend in LWR's, fusion power plants should plan this mode of maintenance performance.
- Important to the extent of its impact on worker health and safety, availability, and cost. Yearly interval less important as systems grow.
- Related to reliability and economics.

- In order to perform properly, the maintenance requirements must be reasonable and achievable. Annual maintenance is the norm, but could be on a 15-18 month schedule. Plan for 4 to 5 week annual scheduled outage with 12 to 16 weeks planned every 5 to 10 years.
- Go/no-go item. The plant must be adequately maintainable or we won't use it. There is nothing magic about a yearly interval.
- Maintenance mockups and simulators will be required.
- Provide a special maintenance crew. Plan for 3 shift scheduled maintenance to minimize downtime.

STARFIRE Response:

A comprehensive maintenance approach was developed that is expected to be compatible with utility operations.

A.3.8 Construction Time

The construction time is defined as the interval between final engineering and construction preparation and the plant start-up.

Average Rating 7.8

Utility Comments:

- This has a major impact on interest during construction (IDC) and on utility planning. Shortening construction time decreases error bands on utility forecasts.
- While in the design and planning phase for fusion, you should emphasize modularization with off-site fabrication and checkout of major assemblies as a means of reducing construction time.
- Long construction time increases the capital cost.
- Unfortunately most plant schedules slip a bit during construction. This should be avoided, since additional escalation and interest during construction drive costs of a late unit upward at an unacceptable rate.
- Small times are easier to live with than long times.

STARFIRE Approach:

A modular design approach, with minimum installation complexity, is planned which would allow construction and checkout to be accomplished in less than 6 years.

A.3.9 Operating Lifetime

Operating lifetime is the plant's service life from startup to decommissioning.

Average Rating 7.6

Utility Comments:

- o Earthquake and licensing criteria are causing utilities to make this longer as time goes by.
- o Only as it affects the total costs in mills/kWh.
- o Plant lifetime should not be sensitive to possible accident events.
- o Coal plants last more than 50 years. The current generation LWR nuclear units are expected to operate at least 40 years, and to be extended beyond that age if practicable. Minimal age for a commercial plant is 30 to 40 years.
- o Go/no-go item. Must be long enough to be acceptable.
- o Has rather direct effect on economics, but probably not a major factor unless unduly short.

STARFIRE Response:

A design life of 40 years was adopted.

A.3.10 Start-up Requirements

Start-up requirements will determine the impact of the commercial tokamak on the grid. Pulsed operation would create a large power demand on a regular schedule.

Average Rating 7.4

Utility Comments:

- o Tokamak power requirements must be compatible with system capability. Requirements which would result in instability or which would cause frequent system trips could not be tolerated.
- o Go/no-go item. If the grid cannot handle these pulses, some form of buffer facility must be added to tokamak project cost.
- o Factor could become more important depending on how large and how frequent the power surge is. This problem may be overcome with suitable energy storage, which of course, comes at a price.
- o Important only in smaller, thermal dominated grids.
- o It will depend on how many tokamaks are on the grid. The more connected the less the significance.

STARFIRE Response:

STARFIRE was designed on the basis of a continuous plasma burn thereby obviating the need for frequent pulsing. The startup requirements are quite manageable on an infrequent basis.

A.3.11 Fuel Storage and Handling Requirements

This item concerns the facility required to store tritium and deuterium and the process for providing fuel to the reactor.

Average Rating 7.1

Utility Comments:

- The importance of this factor must be derived from its impacts on the system cost, reliability, maintainability, safety, etc. The quantity of fuel in reserve should be a utility option, subject to the limit specified by the license.
- Must be a practicable system, meeting regulatory requirements.
- Potentially a go/no-go problem.

STARFIRE Response:

Emphasis in STARFIRE has been to reduce the tritium inventory to a minimum. Therefore only 2 days supply of fuel is stored. This quantity can easily be increased in response to a utility's requirement.

A.3.12 Wall Life

The predicted life of the first wall is an important issue. It will drive the interval between scheduled downtime for wall maintenance operations.

Average Rating 7.0

Utility Comments:

- The importance of wall life is only through its impact on maintenance cost and availability.
- Intertwined with plant availability. Not really separable.
- Economic impact through its affect on availability and reliability.
- Utility operations can accept a maintenance interval of one to two years between scheduled outages.
- Go/no-go item. If this makes the plant inadequately operable or maintainable, utilities won't buy.

STARFIRE Response:

An improved austenitic stainless steel is specified as the first wall material. This is known as 'Prime Candidate Alloy' (PCA) and has an expected life, under STARFIRE'S operating conditions, of approximately 6 years. This is an adequate life to realize a high availability if replacement can be accomplished with reasonable time constraints.

A.3.13 Earliest Commercial Usage

When should the generating plant become operational to provide commercial power.

Average Rating 6.4

Utility Comments:

- o Utilities have coal and nuclear fuel now. It is more important that fusion be reliable and low cost than it be early.
- o The development costs are related to development time and the shorter the time, the less the cost.
- o Timing for a commercial plant is important to insure it is economically viable at the time of introduction.
- o If this estimate included some assessment of the number of R&D stages, the technical risk and cost, and the match of the commercial plant with electric utilities then I would raise its rating to 8.
- o Practically, fusion cannot be expected on a commercial basis until say 2025 or later.
- o Tokamaks diminish in value severely if time to first operation extends beyond 20-25 years from now.
- o The importance of this factor is a function of political decisions about present power sources.

STARFIRE Response:

An assumption is that operation would commence in the period 2010 to 2020.

A.3.14 Developmental Cost

Development costs include the costs in dollars incurred due to the research and development effort required to make the commercial tokamak a reality.

Average Rating 6.3

Utility Comments

- o Not of major importance to utilities as the major cost will be born by the federal government.
- o Costs of any development are high, especially in an exotic technology such as fusion. As in the space program, the federal government must bear the major cost, in the interest of the general public welfare.
- o Government expenditures are somewhat irrelevant because no one expects the Department of Energy's $12B/yr to give any kWhr return. First, industrial-involved project's total capital cost had better be small or it will never get built -- a few hundred million at most.
- o It appears that the required investment for commercialization is to shift from government to the utilities. Minimizing this cost would be a definite advantage. Limits on the allowable costs are, however, difficult to determine.

STARFIRE Response:

Development cost was not directly addressed in this study since the underlying assumption is that STARFIRE is the 10th commercial unit.

A.3.15 Plant Efficiency

This efficiency, in terms of plant performance, is the fraction of the total thermal power produced by the plant which is output as net electrical power.

Average Rating 6.3

Utility Comments:

- o Not important as long as cost criterion is met.
- o Not of importance by itself but instead through its impact on cost and waste heat.
- o Related to economics and possible thermal dump.
- o The LWR ratio of electrical to thermal is about 1/3. This is an acceptable level.
- o Steam power conversion systems are preferred at present.
- o Concerns about waste heat and energy efficiency are political arguments.

STARFIRE Response:

A proven power conversion system, basically a PWR system, was selected for STARFIRE with its' modest thermal conversion efficiency.

A.3.16 Unit Size (Net Power Rating)

Unit size is defined as the net generating station capability (MWe) at the bus bar.

Average Rating 6.3

Utility Comments:

- Not important as long as the cost criteria can be met.
- Fusion generating systems are expected to be capital intensive. Their size should be as large as regulations permit or to the limit of a single turbine (approximately 1300 MWe). Single turbines are preferred.
- Early plants must be small to keep costs down. However, commercial plants would be limited to from 3 to 5% of the peak load of the system or power pool it supplies, but would require a complete system or pool generation study to determine.
- Public acceptance has an effect on size.
- The utility would want to hold down the size of buildings.
- Rather than larger plants, it may be desirable to have larger sites with multiple units on the site. Once a utility has an acceptable site, it is easier to add another unit than to develop a new site.
- The unit must achieve a net generation reasonably close to design goals. Even some coal units may fall short by 5 or even 10%, but this is an undesirable condition. The capital investment is made on the basis that full net power will be obtained.
- All that matters on this point is what goes into the plant, what comes out, and what it all costs. Station uses are internal matters.
- Acceptability of large versus small or intermediate would be dictated by each electric system's requirements. The desirability of different sizes would be determined by cost of electricity comparisons.

STARFIRE Response:

STARFIRE is rated at 1200 MWe, which is in the range most preferred by utilities.

A.3.17 Duty Cycle

The duty cycle is the percent of time the plasma is burning to total time. This factor is a measure of the thermal storage required to obtain continuous thermal power to the power conversion system. This factor is not a measure of the time the generator is producing power.

Average Rating 6.2

Utility Comments:

- Not by itself of importance, but its impacts on the technology/wall life in the interest of maintainability, cost, etc., are very important factors.
- May be getting a little too specific. As long as the output to the grid is constant, the utility would not care what the reactor's internal duty cycle is.

STARFIRE Response:

STARFIRE is designed as a steady state machine with continuous plasma burn. This was viewed as a major step forward for tokamaks by the utility advisory group.

A.3.18 Energy Storage

Energy storage is defined as stored energy (both thermal and electrical) required to deliver continuous power to the grid during the downtime between burn cycles and provide all or part of the power for restart.

Average Rating 6.0

Utility Comments:

- Of no major importance except as to its impact on cost and availability.
- Another quantity that doesn't have an absolute rating except as it impacts the factors of importance to having an acceptable fusion plant.
- To be compatible with the system, the unit must be capable of producing a uniform, continuous net power output.
- Pulses of perhaps 100-200 MWe could be accommodated at some locations. Beyond that, storage would need to be included as part of the fusion project cost.

STARFIRE Response:

There is no requirement for energy storage since STARFIRE is steady state and the infrequent startup requirement (250 MW) can be planned for and drawn from the grid.

A.3.19 Waste Thermal Heat

Waste thermal heat is the unusable unconverted waste heat distributed to the environment.

Average Rating 6.0

Utility Comments:

- o Only a minor site problem as all plants require cooling towers anyway.
- o Main issue: wet versus dry cooling. Water resources likely to be very limited in the future.
- o Heat rejection to the environment must be acceptable under governmental regulations.
- o Projects usually are not torpedoed on the waste heat issue alone but bad waste heat problems compared to alternative generation should be avoided for political reasons.

STARFIRE Response:

The STARFIRE design is based on current practice.

A.3.20 Load Following Capability

Load following capability involves automatic load-following operation, e.g., from 20 to 100 percent of plant electrical and a daily load swing operation to 50 percent power.

Average Rating 4.8

Utility Comments:

- o Not very important in a new base loaded plant except if it is expensive.
- o No longer as important as it used to be.
- o A unit which can't load follow has a place in all electric systems.
- o Plant generation depends on its production costs in relation to other system plants. It must be able to swing up and down as economics require.
- o Our system urgently needs base load capacity only. Existing oil-fired steam plants can provide peaking.
- o LWR's (and base-loaded coal fired plants?) do not meet this requirement, why impose it on fusion?

STARFIRE Response:

STARFIRE is designed as a base load plant; however, it is capable of load following with operation at reduced power.

Table of Contents

Page

B.1 VACUUM SYSTEM CONDUCTANCE MODELING B-1

List of Figures

Number Page

B-1 Reciprocal conductance as a function of gas load, Q, and pressure B-1

B-2 Reciprocal conductance of 24 vacuum ducts with no bends as a function of duct diameter and duct length B-4

B-3 Reciprocal conductance of 24 vacuum ducts with one bend as a function of duct diameter and duct length B-4

B-4 Reciprocal conductance of 24 vacuum ducts with two bends as a function of duct diameter and duct length B-6

List of Tables

Number Page

B-1 Parameterized Vacuum Conductance Analysis for Helium B-5

B.1 VACUUM SYSTEM CONDUCTANCE MODELING

The main function of the STARFIRE vacuum system is the removal of generated helium ash. The classical equation Q/P = S relates the gas load (Q), the pressure (P), and the effective speed (S) where S is assumed to be equivalent to the total conductance (C). Thus for a given gas load and pressure, one can determine the minimum conductance required of the vacuum system. STARFIRE which is a constant power reactor has a fixed helium gas load of $\sim 8\ Pa \cdot m^3 s^{-1}$. For efficient operation of the limiter, the maximum helium pressure in the limiter slot should be < 20 mPa (2×10^{-4} torr). Using Fig. B-1, in which the reciprocal conductance is plotted as a function of the pressure and the gas load, one finds that STARFIRE requires for helium a reciprocal conductance $< 2.5 \times 10^{-3}\ sm^{-3}$. The total gas load is inversely proportional to the fractional burnup. As shown in Section 8 the use of a limiter/vacuum system results in a high fractional burnup (42%) and thus a reduced DT gas load ($\sim 11\ Pa \cdot m^3 s^{-1}$.) For DT the reciprocal conductance required is also $< 2.5 \times 10^{-3}\ sm^{-3}$.

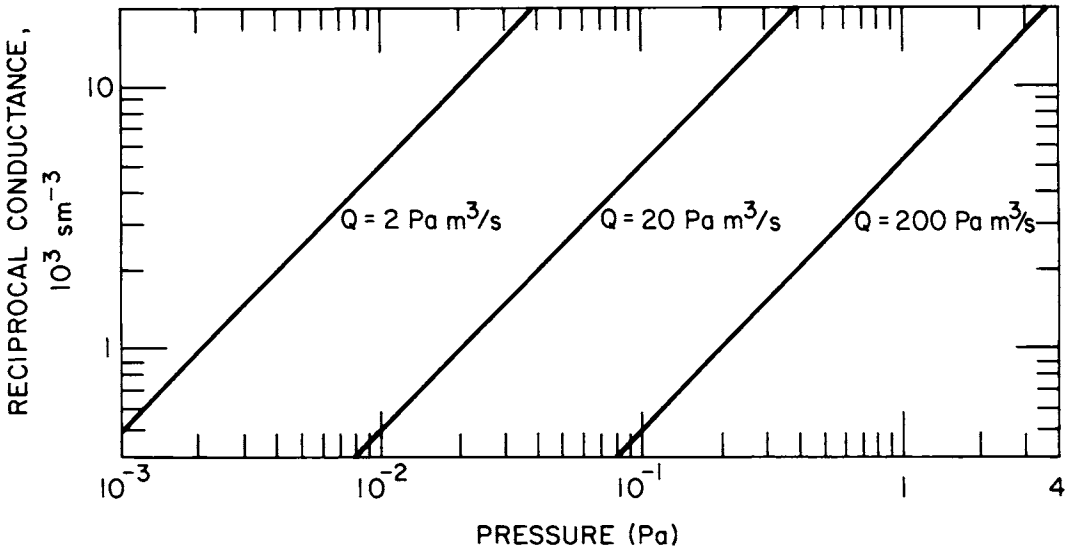

Figure B-1. Reciprocal conductance as a function of gas load, Q, and pressure.

In conventional vacuum theory[1], the reciprocal of the total conductance is equal to the sum of the individual reciprocal conductances, i.e.,

$$\frac{1}{C} = \sum \frac{1}{C_i} \tag{1}$$

Therefore, by performing scoping studies using the individual reciprocal conductances of the vacuum system components, one can determine, first, the relative contribution of each component to the total; second, the impact of temperature or dimensional variation on a component's performance, and third, possible configurations which would optimize the total conductance while satisfying other constraints, e.g., those imposed by neutronic considerations (ducts of minimal size and number) and geometric limitations. This method of scoping the design of the vacuum system results in flexibility in accommodating changes which occur during preliminary stages of the fusion reactor design.

The individual components are the following: 1) the two limiter slots which encompass the region between the back of the limiter and the first wall and which serve as a trap for most of the helium atoms and a large fraction of the DT; 2) the two limiter ducts which are openings extending through the blanket at the torus' mid-circumference; 3) the plenum which is the void region between the blanket and shield, and 4) the 24 circular vacuum ducts which connect the plenum and the compound cryopumps. The first three components are modeled as long rectangular ducts. Aperture and bend effects were assumed to be negligible; therefore at 293°K, the appropriate conductance equation for helium gas if a >10 b is:[1]

$$C_t = \frac{0.122\ a^2 b^2}{(a + b)\,\ell} \tag{2}$$

where a, b, and ℓ are the duct dimensions in cm and C_t is in $m^3 s^{-1}$. For the circular vacuum ducts, aperture and bend effects are significant; therefore the conductance (C_{VD}) includes contributions from the tube (C_t) and the aperture (C_a). The equations used for helium are:[1]

$$C_t = \frac{0.0332\ b^3}{\ell'} \tag{3}$$

$$C_a = 0.0250\ b^2 \tag{4}$$

and

$$C_{VD} = \frac{C_a C_t}{C_a + C_t} \tag{5}$$

where $\ell' = \ell + 1.33\ (b \cdot n)$, n being the number of bends. Units are the same as above. To utilize equations (2) - (5) at a temperature (T) other than 293 K, the appropriate conversion factor is $(T/293°K)^{1/2}$. The conversion factor for a gas (G) other than helium (α)at 293°K is $(\text{mass } \alpha/\text{mass } G)^{1/2}$; for DT, it is 0.89.

A summary of the reciprocal conductances for each of the vacuum components is shown in Table B-1. Changing the magnitude of "b" for the limiter slots from 10 to 5 cm triples the reciprocal conductance; a 100°K decrease in temperature produces a very minor increase (0.22 → 0.23) in the reciprocal conductance. In modeling the limiter ducts, the volume occupied by the coolant manifolding is accounted for by reducing the "a" dimension from 6000 to 3170 cm which results in a doubling of the reciprocal conductance (0.13 → 0.24). A 100°K decrease in temperature again has a minor effect. In the plenum, the volume occupied by the coolant manifolding is accounted for by reducing the "b" dimension from 80 to 67 cm. The conductance is reduced an additional 4% to account for the volume lost to the twelve rf ducts in the lower plenum. The plenum reciprocal conductance is minimally impacted by these changes. To have an appreciable effect on the plenum's reciprocal conductance the "b" dimension has to be reduced to 40 cm at which point, it has tripled. The plenum's reciprocal conductance in the reference case is an order of magnitude smaller than either the vacuum pump conductance or the limiter duct conductance. Together, these three components comprise only 30% of the total reciprocal conductance. The other 70% is represented by the vacuum ducts which are a prime design constraint. To derive an optimized vacuum design, it was found advantageous to generate plots of the reciprocal conductance of the 24 vacuum ducts as a function of duct diameter, duct length and number of duct bends. These are shown in Figs. B-2 through B-4 for DT gas at 293°K. Multiplication by the mass conversion factor for helium (1.12) yields the helium reciprocal conductance. For the reference design for

Table B-1 Parameterized Vacuum Conductance Analysis for Helium

	Dimensions (cm)		Length (cm)	Temp. (K)	Component Conductance ($m^3\ s^{-1}$)	Reciprocal Conductance ($10^{-3}\ sm^{-3}$)
	a	b	ℓ or ℓ'			
Limiter slots (2)	5650	10	50	673	4320	0.23[A]
	5650	10	50	773	4630	0.22
	5650	10	40	773	5780	0.17
	5650	5	50	773	1160	0.86
Limiter ducts (2)	3170	16	70	573	4090	0.24[A]
	3170	16	70	673	4420	0.23
	3170	14	70	673	3390	0.30
	4600	16	70	673	6430	0.16
	6000	16	70	573	7750	0.13
Plenum	6000	67	600	473	13660	0.07[A]
	6000	67	600	573	15140	0.07
	6000	76	600	573	19380	0.05
	6000	40	600	573	5380	0.19
	6000	80	600	473	20360	0.05[B]
Vacuum ducts (24)	{——	100	640}	293	730	1.37[A]
	{——	120	560}			
	——	100	800	293	850	1.17
	——	100	1000	293	700	1.42
	——	100	1200	293	600	1.67
	——	120	1000	293	1190	0.84
	——	120	1200	293	1010	0.99
	——	150	1000	293	2240	0.45
Vacuum pumps[C] (24)	——	——	——	——	2400	0.42
	——	——	——	——	2880	0.35[A]
	——	——	——	——	3360	0.30

[A] Reference STARFIRE vacuum design. [B] Uncorrected for rf ducts. [C] Helium pump speeds.

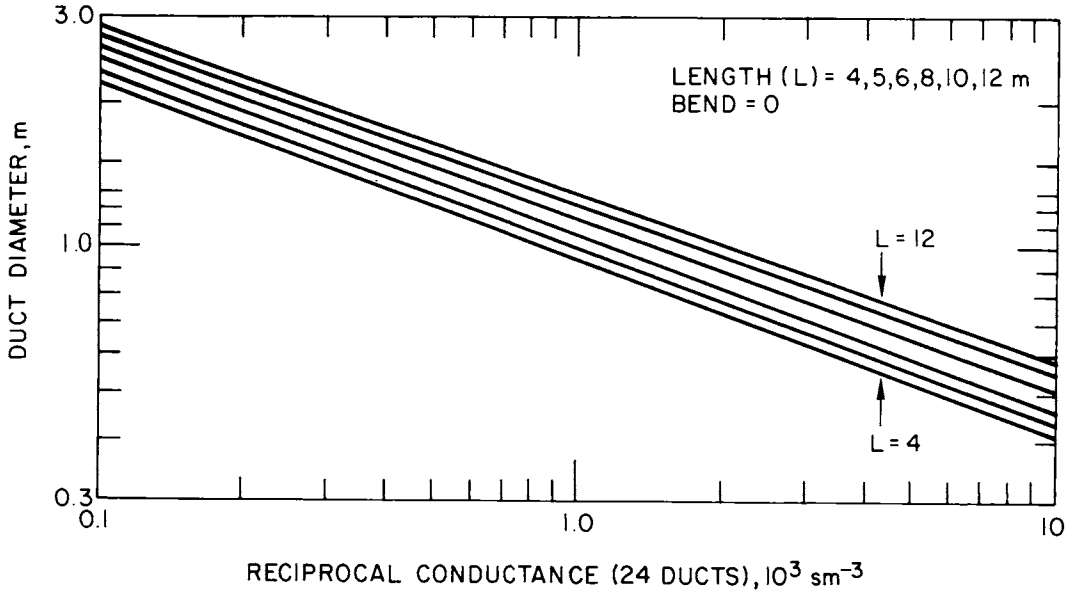

Figure B-2 Reciprocal conductance of 24 vacuum ducts with no bends as a function of duct diameter and duct length.

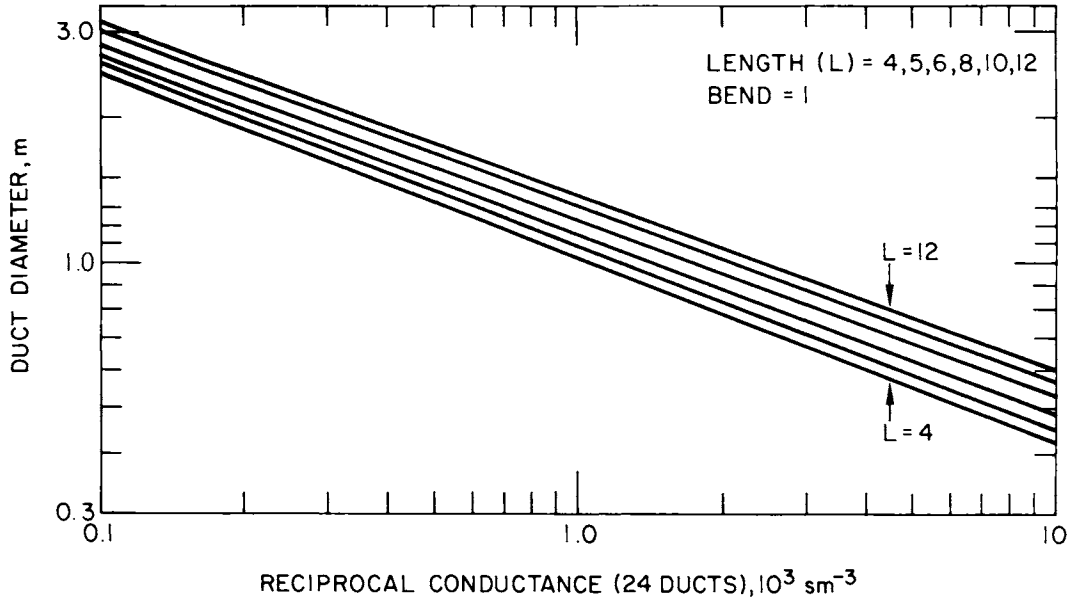

Figure B-3. Reciprocal conductance of 24 vacuum ducts with one bend as a function of duct diameter and duct length.

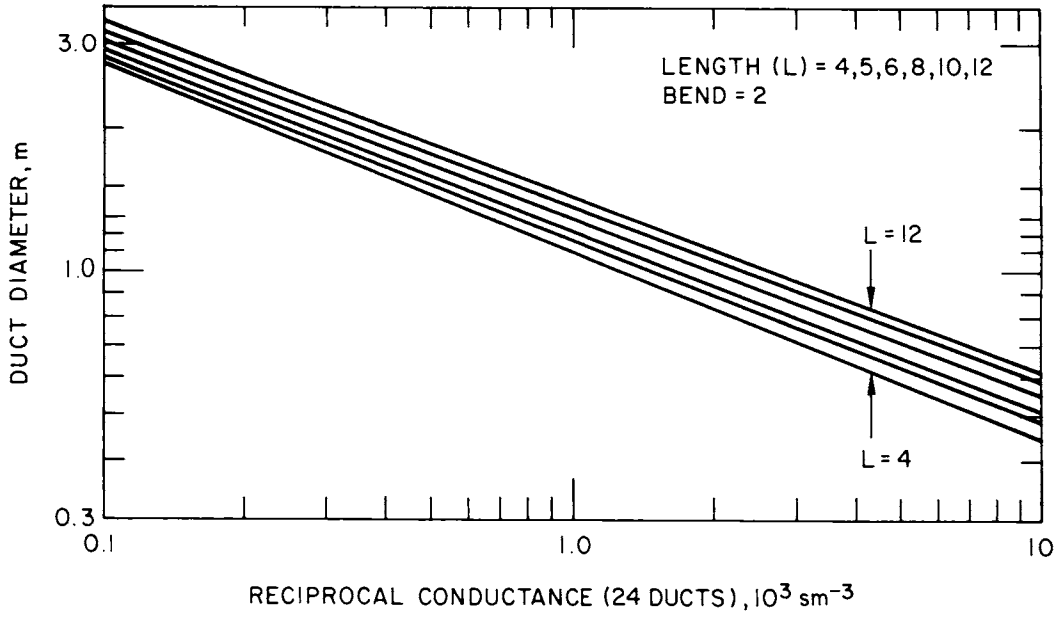

Figure B-4. Reciprocal conductance of 24 vacuum ducts with two bends as a function of duct diameter and duct length.

STARFIRE, each vacuum duct is composed of a front section 6.4 m long x 1.0 m in diameter and a back section 5.6 m long x 1.2 m in diameter. The reciprocal conductance (1.37×10^{-3} sm^{-3}) is less than that for a system of ducts each 12 m long by 1.0 m in diameter (1.67×10^{-3} sm^{-3}).

The reciprocal conductance for helium for the STARFIRE reference design is 2.03×10^{-3} sm^{-3} which corresponds to an effective speed of 490 $m^3 s^{-1}$. The total reciprocal conductance for DT is 2.1×10^{-3} sm^{-3} with an effective speed of 480 $m^3 s^{-1}$. Thus all constraints originally put on the vacuum system have been satisfied. In addition, the use of scoping studies based on reciprocal conductances has shown itself to be a simple and effective way of analyzing a fusion reactor vacuum system.

References

1. "Vacuum Equipment and Techniques", ed. A. Guthrie and R. K. Wakerling, McGraw-Hill Book Company, Inc. New York, 1949.

Table of Contents

		Page
C 1	MATERIALS REQUIREMENTS FOR STARFIRE REACTOR	C-1
C 2	MINERAL RESOURCES, RESERVES, PRICES AND PROJECTED DEMAND	C-2
C 3	COMPARISON OF STARFIRE MATERIALS REQUIREMENTS TO RESERVES AND RESOURCES	C-3

List of Tables

Number		Page
C-1	STARFIRE Reactor Component Volumes and Masses	C-6
C-2	Materials Inventory for Each STARFIRE Reactor Categorized by Material	C-7
C-3	Resource Requirements by Element for Each STARFIRE Reactor	C-10
6-4	Reserves and Resources Based on Metal Content	C-13
C-5	Projected Probable Demand for Primary Metal in The Year 2000	C-14
C-6	Projected Probable Average Annual Growth Rate for Primary Metal 1977-2000	C-15
C-7	Projected Probable Cumulative Demand for Primary Metal to the Year 2000	C-16
C-8	Recent Price Information for Metals as Unalloyed Primary Ingot	C-17
C-9	Materials Requirements and Estimates of Reserves	C-18
C-10	Total Resource Requirements for 100 STARFIRE Reactors	C-19
C-11	Comparison of E. Cameron et al., (UWFDM-313) Beryllium Reserve and Resource Values with U.S. Bureau of Mines Values	C-20
C-12	U.S. Net Import Reliance on Selected Minerals and Metals as a Percentage of 1978 Comparison	C-21

This appendix presents a discussion of the materials requirements for the STARFIRE reactor, and compares the total resource requirements for a 1.2×10^5 MWe generating capacity to available mineral reserves.

C.1. MATERIALS REQUIREMENTS FOR STARFIRE REACTOR

Tables C-1 through C-3 contain information about the materials requirements for STARFIRE (reactor only). Table C-1 is a compilation of information about the volumes and masses of materials in the form of alloys and compounds used in each of the primary components of the STARFIRE reactor. Helium is omitted.

In Table C-2 the requirements are expressed in terms of the total material requirements in the form of alloys and compounds as they will be used in STARFIRE. The initial and life of unit requirements are shown. Life of unit requirements for blanket structural materials for a 40 year design life are obtained by multiplying the initial mass requirement by a factor of 7.5. This factor is assumed to account for initial requirements plus scheduled and unscheduled replacements over the 40 year design life, with no recycling assumed within that period. The neutron multiplier and breeder materials in the blanket, and the limiter materials, have factors much lower than 7.5 because recycling of materials can be assumed within a relatively short time after removal from the reactor, as explained in the footnotes to Table C-2.

The materials in all STARFIRE reactor components outside the first-wall/blanket were selected to be recyclable within a human generation, i.e. 20-50 years. This would significantly reduce the demand on U.S. and world resources for an economy using a large number of reactors based on the STARFIRE design (see Sec. C.3).

Table C-3 is a compilation of information regarding the total elemental requirements for STARFIRE. The life of unit requirements of those materials which are routinely replaced are calculated in the same manner as for Table C-2. Lifetime requirements for materials which are not routinely replaced are simply those in the first two columns of Table C-3. Also shown in Table

C-3 are the total requirements in units of tonnes/MWe, which is one way of comparing the requirements of one design with those of another.

Comparisons of STARFIRE reactor material requirements with those of previous reactor designs, such as the UWMAK series and NUWMAK requirements tabulated in the Cameron report,[1] were performed. However, the results are not reported here because they could be misleading for certain elements, e.g., Fe. This is primarily because the reactor material requirements for previous designs could not be defined to the depth and extent done for the STARFIRE reference reactor design. As an example, support structure for the UWMAK and NUWMAK reactors would require further definition before valid comparisons could be made with the STARFIRE requirements, as expressed in terms of tonnes/MWe in the last column of Table C-3.

C.2. MINERAL RESOURCES, RESERVES, PRICES AND PROJECTED DEMAND

Tables C-4 through C-8 contain information obtained from recent U.S. Bureau of Mines Mineral Commodity Profiles. Unfortunately, such studies have not yet been done for all of the metals used in the STARFIRE design. However, that information which is available from the Profiles source is considered to be both current and reliable.

Table C-4 shows the reserves and resources of elements for the United States and for the entire world. Reserves are defined as amounts of elements actually mineable and available to man under current economic, social, and political conditions. The associated tonnages of ore and contained metal from discovered deposits have been calculated based on results of exploration and sampling. Other resources are different in that they are not readily available at present for various reasons, e.g., mining is uneconomic due to low metal content, mining is forbidden because of social or environmental reasons, insufficient exploration or sampling has been performed.

Table C-5 lists the projected probable demand for elements in the year 2000, which is the latest year for which there are projections. The anticipated annual growth rates between the present (1980) and the year 2000 are shown in Table C-6. Projected cumulative demand for primary metal to the year 2000 is shown in Table C-7. Recent price information for the raw metals is shown in Table C-8. This data has been provided for general

information purposes only and is not necessarily the same as that used in performing STARFIRE cost estimates.

C.3. COMPARISON OF STARFIRE MATERIALS REQUIREMENTS TO RESERVES AND RESOURCES

Table C-9 lists the STARFIRE material requirements by element for 100 reactors. All reactors are assumed to be operating in parallel, therefore no advantage is taken of the possible recycling of materials from one reactor to another. Also listed in Table C-9 are recent production figures and estimates of reserves of those elements for the U.S. and for the world.

The materials requirements for the reactor portion only are also given in Table C-10, again assuming 100 reactors based on the STARFIRE design, for a total capacity of 1.2×10^5 MWe. The materials are listed in three groups, according to availability from domestic sources.[2]

Group A consists of metals Be, B, C, Cu, Fe, Pb, Li, Mo, Si, and Zr, that should be available from domestic mines during the period 2000 to 2020 at market prices then current. Those prices will reflect whatever inflation the future may bring, plus increases due to development of lower-grade ores. However, domestic reserves of these materials are adequate. Appropriate increases in production capacity may be assumed to meet the increases over normal U.S. consumption that would be involved in meeting reactor requirements.

Beryllium, although somewhat controversial in terms of the resource availability, is listed among the Group A materials. Although the possibility of using beryllium as a neutron multiplier was investigated, the STARFIRE reference design uses beryllium only as a low-Z coating for the first wall and limiter. Thus, the total requirement over the life of each reactor is only 10 tonnes. The U.S. Bureau of Mines in its assessment of domestic and world resources of beryllium[3] places the U.S. reserves at 25,400 tonnes and the world reserves at 381,000 tonnes. The total resources are approximately three times those values.

Cameron et al.[1] in their evaluation of the minerals resource implications of a tokamak fusion reactor economy, advise against the use of beryllium. However, they apparently were basing their judgment on the large amounts of Be required in previous reactor designs, and on the availability of high-grade ore (pegmatite) for which they estimated reserves

in the U.S. of only 270 tonnes and world of 820 tonnes. They apparently did not have access to the information in the Bureau of Mines report which was published at nearly the same time. A comparison between Cameron's assessment of beryllium reserve and resources values the U.S. Bureau of Mines values is given in Table C-11. The Cameron report gives a large amount of information about the location of minerals in both the U.S. and the rest of the free world, along with production and consumption rates.

Group B consists of Al, Cr, Ti, Mn, Ni, Sn, V and Nb. Reserves of Al, Ti, Ni, and V metals will probably be too depleted by the year 2000 to furnish the required amounts. However, at prices 3 times normal prices all the Group B metals except perhaps Nb could be obtained from domestic deposits that are not now economically viable. Those deposits could be brought into production over a period of 3 to 5 years.

Niobium could present a problem. The U.S. currently does not produce niobium. At three times current prices, the total requirement (10 tonnes) could perhaps be obtained from the Powderhorn (Colorado) deposits (60 tonnes). World reserves of niobium, however, are very large relative to the requirement. If designs like STARFIRE are to be built, it would be well to consider stockpiling Nb over a period of years to take advantage of the production capability that exists abroad, which could be increased, especially in Canada and Brazil.

Group C consists of only Ta and W. U.S. reserves of W are approximately 2/3 of the total requirement. They furnish only about 40 percent of current U.S. consumption and they are steadily being depleted. It is increasingly difficult to find new tungsten deposits in the U.S. Canadian reserves are twice those of the U.S. and could help in supplying requirements, but major reserves outside North America would have to be tapped. The requirement is about two times total world annual production, hence tungsten availability should be a matter of concern. Tungsten is used only in the inner shield, based on economic incentives (i.e., minimizing shield thickness), but it can be readily replaced with another shielding material as discussed in Chap. 11.

Tantalum is also a matter of concern, even though (as a part of the STARFIRE limiter material) it could be recycled within five years after removal from the reactor. In 1979, world production was one million pounds. The domestic and world resources of that metal are not well known. The U.S. Bureau of Mines has not yet published a Mineral Commodities Profile for tantalum. Its present application is primarily for use in the manufacture of electronic components. Tantalum (as Ta-5W) has been proposed for use in the STARFIRE limiter (Chap. 8), but it is only one of several candidate materials.

Table C-12 has been included as a reminder of how much the United States presently relies on foreign sources for certain critical materials.[4] This fact does not necessarily imply that the U.S. does not have resources of some of those materials, but rather that some of them can be produced more cheaply in other countries. Unfortunately, there are others of the materials listed for which there are not sufficient domestic supplied. Those should be avoided, or substitutions made, if possible.

References

1. E. N. Cameron, et al., "Minerals Resource Implications of a Tokamak Fusion Reactor Economy," UWFDM-313, p.26 (1979).

2. B. Badger, et al., "NUWMAK: A Tokamak Reactor Design Study," UWFDM-330 (March 1979).

3. U.S. Bureau of Mines, Mineral Commodity Profiles.

4. U.S. Bureau of Mines, Import-Export Data (1978).

Table C-1. STARFIRE Reactor Component Volumes and Masses

Reactor Component	Material	Volume (m^3)	Mass (tonnes)
First wall	PCA	3.6	28.6
	H_2O	2.0	2.0
Multiplier	Zr_5Pb_3	36.8	328.0
Second Wall	PCA	2.6	20.5
	H_2O	1.2	1.2
Breeder (inner and outer)	$LiAlO_2$	177.9	606.5
	PCA	22.2	174.7
	H_2O	11.3	11.3
Reflector (outer only)	C	102.0	164.0
	PCA	5.7	44.7
	H_2O	5.7	5.7
Blanket jacket	PCA	19.0	149.3
Limiter	Ta5W	1.9	32.0
Inner Shield	W	44.0	840.0
	B_4C	26.3	66.0
	Fe1422	12.1	117.8
	H_2O	9.3	9.3
Outer Shield	Ti64	25.9	117.0
	TiH_2	336.0	1310.0
	Fe1422	487.0	3858.0
	B_4C	144.8	362.0
	H_2O	144.8	144.8
Penetration shield	Fe1422	742.9	5885.0
	Ti64	6.6	30.0
	TiH_2	86.1	336.0
	B_4C	174.8	437.0
	H_2O	175.0	175.0
TF magnets	Cu	179.3	1598.0
	304 SS	446.1	3428.0
	Insulator	32.1	61.0
	Fe1422	123.0	974.0
	Nb_3Sn	6.4	51.0
	NbTi	8.9	57.0
OH/EF magnets	Cu	50.5	450.0
	304 SS	134.5	1057.2
	Insulator	45.8	87.0
	Fe1422	38.3	304.0
	NbTi	5.1	33.0
CF magnets	Cu	1247.5	140.0
Support structure	Fe1422	199.1	1570.8
	G-10	147.7	280.7

Table C-2. Materials Inventory For Each STARFIRE Reactor Categorized by Material

Material	Initial Requirements Volume (m^3)	Initial Requirements Mass (tonnes)	Life of Unit Requirements[a] Volume (m^3)	Life of Unit Requirements[a] Mass (tonnes)
PCA				
FW	3.6	28.6	30.6	214.5
SW	2.6	20.5	22.1	153.8
Breeder	22.2	174.7	188.7	1310.3
Reflector	5.7	44.7	48.4	335.3
Jacket	19.0	149.3	161.5	1119.8
Headers & Manifolds	4.1	32.2	34.9	241.5
		450.0		3375.2
H_2O (Primary)				
FW	2.0	2.0		
SW	1.3	1.3		
Breeder	11.3	11.3		
Reflector	5.7	5.7		
Headers & Manifolds	29.5	29.5		
H_2O (Shield)	9.3	9.3		
Inner Shield				
Outer Shield	144.8	144.8		
Vacuum Duct Shield	175.0	175.0		
Zr_5Pb_3[b]				
Multiplier	36.8	328.0	73.6	656.0
$LiAlO_2$ (60% enriched)[b]				
Breeder	178.1	606.5	356.2	1213.0
C[b]				
Reflector	102.0	164.0	204.0	328.0
W[d]				
Inner Shield	44.0	840.0		
Outer Shield	0.0	0.0		
Vacuum Duct Shield	0.0	0.0		
		840.0		
B_4C				
Inner Shield	26.3	66.0		
Outer Shield	144.8	362.0		
Vacuum Duct Shield	174.8	437.0		
		865.0		
Ti64				
Inner Shield	0.0	0.0		
Outer Shield	25.9	117.0		
Vacuum Duct Shield	6.6	30.0		
		147.0		
TiH_2				
Inner Shield	0.0	0.0		
Outer Shield	336.0	1310.0		
Vacuum Duct Shield	86.1	336.0		
		1646.0		

Table C-2. Materials Inventory for Each STARFIRE Reactor Categorized by Material (Continued)

Material	Initial Requirements Volume (m^3)	Initial Requirements Mass (tonnes)	Life of Unit Requirements[a] Volume (m^3)	Life of Unit Requirements[a] Mass (tonnes)
Fe1422 (Low Mo steel)				
Inner Shield	12.1	95.9		
Outer Shield	487.0	3858.0		
Vacuum Duct Shield	736.0	5830.0		
RF Duct Shield	6.9	55.0		
TF Magnet Vacuum Tank	123.0	974.0		
Common Dewar	8.8	69.9		
Anti-Torque Panel	132.4	1050.9		
Blanket/Shield Pedestal	52.8	418.0		
Equipment/Coil Supports	4.1	32.2		
OH Magnet Vacuum Tank	6.9	54.9		
EF Magnet Vacuum Tank	31.4	249.1		
		12,687.9		
Cu				
TF Coil Stabilizer	179.3	1598.0		
OH Coil Stabilizer	8.6	77.1		
CF Coil Conductor	15.7	140.0		
EF Coil Stabilizer	41.9	372.9		
		2188.0		
G-10 Insulator				
TF Coils	32.1	61.0		
OH/EF Coils	45.8	87.0		
Centerpost Supports	0.7	1.4		
Centerpost	147.0	279.3		
		428.7		
Nb_3Sn				
TF Magnet	6.4	51.0		
NbTi				
TF Magnet	8.9	57.0		
OH, EF Magnets	5.1	33.0		
		90.0		
Ta5W[b,c]				
Limiter	1.9	32.0	3.8	64.0
Be				
FW Coating	0.5	1.0	4.3	8.5
Limiter Coating	0.1	0.2	0.9	1.7
		1.2		10.2
304 Stainless Steel				
TF Magnet Helium Tank	143.0	1124.0		
TF Coil	293.1	2304.0		
OH Magnet Helium Tank	12.8	101.0		
OH Magnet Helium Tank	10.2	80.2		
EF Magnet Helium Tank	62.1	488.0		
EF Coil	49.4	388.0		
		4,485.2		

Table C-3 Resource Requirements by Element for Each STARFIRE Reactor

Element	Material[b] (Component)	Wt. %	Requirements[a] Initial (tonnes)	Life of Unit Total (tonnes)	Life of Unit Total (tonnes/MWe)
Iron (Fe)	PCA	65	292.5	2486.	2.07
	304 SS	70	3140.	3140.	2.62
	Fe1422	81	10277.2	10277.2	8.56
			13709.7	15903.2	13.25
Nickel (Ni)	PCA	16	72.0	612.0	0.51
	304 SS	9	403.6	403.6	0.34
	Fe1422	2	253.7	253.7	0.21
			729.3	1269.3	1.06
Chromium (Cr)	PCA	14	63.0	535.5	0.45
	304 SS	18	807.3	807.3	0.67
	Fe1422	0	0	0	0
			870.3	1342.8	1.12
Molybdenum (Mo)	PCA	2	9.0	76.5	0.06
	304 SS	0.3	13.4	13.4	0.01
			22.4	89.9	0.07
Beryllium (Be)	(FW Coating)	100	1.0	8.5	0.01
	(Limiter Coating)	100	0.2	1.7	~0
			1.2	10.2	0.01
Titanium (Ti)	PCA	0.3	1.4	11.5	0.01
	Ti64	90	132.3	132.3	0.11
	TiH_2 (Shield)	98	1613.1	1613.1	1.34
	NbTi	66	90.0	90.0	0.08
			1836.8	1846.9	1.54
Manganese (Mn)	PCA	2	9.0	76.5	0.06
	304 SS	1.2	53.8	53.8	0.04
	Fe1422	14	1771.7	1771.7	1.48
			1784.5	1902.0	1.58
Silicon (Si)	PCA	0.5	2.3	19.1	0.02
	304 SS	0.5	22.4	22.4	0.02
	Fe1422	0.2	25.4	25.4	0.02
			50.1	66.8	0.06

Table C-3. Resource Requirements by Element For Each STARFIRE Reactor (Continued)

Element	Material[b] (Component)	Wt. %	Requirements[a] Initial (tonnes)	Life of Unit Total (tonnes)	Life of Unit Total (tonnes/MWe)
Carbon (C)	PCA	0.05	0.2	1.9	∿0
	304 SS	0.06	2.7	2.7	∿0
	B_4C (Shield)	22	191.3	191.3	0.16
	Fe1422	0.6	76.1	76.1	0.06
	(Reflector)	100	164.0	1394.	1.16
			434.3	1666.0	1.38
Zirconium (Zr)	Zr_5Pb_3 (Multiplier)	42.	137.8	275.6	0.23
Lead (Pb)	Zr_5Pb_3 (Multiplier)	58.0	190.2	380.4	0.32
Lithium (Li)	$LiAlO_2$[c,d] (Breeder)	19.	115.2	1866.2	1.56
Aluminum (Al)	Ti64	6.	8.8	8.8	0.01
	$LiAlO_2$[d] (Breeder)	37.	224.4	448.8	0.37
			233.2	457.6	0.38
Tungsten (W)	(Shield)[f]	100	840.0	840.0	0.70
	Ta-5W[d,e] (Limiter)	5	1.6	3.2	∿0
			841.6	843.2	0.70
Tantalum (Ta)	Ta-5W[d,e] (Limiter)	95	30.4	60.8	0.05
Boron (B)	B_4C (Shield)	78	655.2	655.2	0.55
Vanadium (V)	PCA[d]	0.1	0.5	3.8	∿0
	Ti64	4.0	5.9	5.9	∿0
			6.4	9.7	0.01
Copper (Cu)	304 SS	0.2	9.0	9.0	0.01
	(TF Coil)	100	1598.0	1598.0	1.33
	(OH Coil)	100	77.1	77.1	0.06
	(CF Coil)	100	140.0	140.0	0.12
	(EF Coil)	100	372.9	372.9	0.31
			2188.0	2188.0	1.82

Table C-3. Resource Requirements by Element For Each STARFIRE Reactor (Continued)

Element	Material (Component)	Wt. %	Requirements[a] Initial (tonnes)	Life of Unit Total (tonnes)	Life of Unit Total (tonnes/MWe)
Niobium (Nb)	Nb_3Sn (TF Coil)	70.1	35.8	35.8	0.03
	NbTi (TF Coil)	66.0	37.6	37.6	0.03
	(OH/EF Coil)		21.8	21.8	0.02
			95.2	95.2	0.08
Tin (Sn)	Nb_3Sn (TF Coil)	29.2	14.9	14.9	0.01

[a] Assumes design basis life of 40 years -- see Appendix C text. For reactor only.

[b] Structure material compositions from Table 21-3.

[c] Requirements for $LiAlO_2$ include a factor of 8.1 applied to lithium mass only. This reflects 60% enrichment with ^6Li of natural lithium which contains only 7.4% of ^6Li (60/7.4 = 8.1).

[d] Life of unit requirements for these materials are twice the initial requirements, to account for anticipated recycling within a short period of time following removal from the reactor.

[e] Tantalum (as Ta-5W) is only one of several candidates for the reference design limiter. (see Sec. C-3).

[f] Tungsten can be replaced by another shielding material (see Sec. C-3).

Table C-4. Reserves and Resources[a] Based on Metal Content

Metal	United States Reserves	United States Resources[b]	World Reserves	World Resources[b]
	(tonnes)		(tonnes)	
Aluminum (Al)	9.1×10^6	4.5×10^7	5.1×10^9	7.3×10^9
Beryllium (Be)	2.5×10^4	7.3×10^4	3.8×10^5	1.1×10^6
Boron (B)	1.8×10^7	N.A.	9.1×10^7	N.A.
Chromium (Cr)	4.5×10^4	4.1×10^5	5.9×10^8	1.2×10^9
Cobalt (Co)	0	7.7×10^5	1.4×10^6	2.3×10^8[c]
Copper (Cu)	9.2×10^7	3.8×10^8	4.9×10^8	2.3×10^9[c]
Iron (Fe)	3.6×10^9	1.8×10^{10}	9.4×10^{10}	2.0×10^{11}
Lead (Pb)	2.6×10^7	7.2×10^7	1.2×10^8	2.8×10^8
Lithium (Li)	3.6×10^5	7.3×10^5	1.9×10^6	7.3×10^6
Manganese (Mn)	---	6.7×10^7	1.6×10^9	1.9×10^{10}[c]
Nickel (Ni)	1.8×10^5	1.4×10^7	5.4×10^7	9.0×10^8[c]
Niobium (Nb)	---	1.4×10^5	1.0×10^7	1.5×10^7
Silicon (Si)		Not given, but are vast.		
Tin (Sn)	4.0×10^4	1.9×10^5	1.0×10^7	3.7×10^7
Titanium (Ti)				
in Ilmenite	1.6×10^7	8.6×10^7	1.6×10^8	5.4×10^8
in Rutile	1.4×10^6	3.0×10^6	7.3×10^7	1.6×10^8
Ti Total:	1.8×10^7	8.9×10^7	2.4×10^8	7.0×10^8
Tungsten (W)	1.2×10^5	4.5×10^5	1.9×10^6	5.4×10^6
Vanadium (V)	1.0×10^5	9.1×10^6	9.7×10^6	5.6×10^7

[a] U.S. Bureau of Mines Mineral Commodity Profiles.

[b] Includes reserves, but excludes speculative and submarginal resources.

[c] Includes seabed nodules.

Table C-5. Projected Probable Demand[a] For Primary Metal in the Year 2000

Metal	United States (tonnes)	World (tonnes)
Aluminum (Al)	1.44×10^7	5.07×10^7
Beryllium (Be)	1.54×10^2	2.68×10^2
Boron (B)	2.64×10^5	8.91×10^5
Chromium (Cr)	1.00×10^6	4.82×10^6
Cobalt (Co)	1.94×10^4	3.18×10^5
Copper (Cu)	3.18×10^6	1.77×10^7
Iron (Fe)	1.71×10^8	1.23×10^9
Lead (Pb)	1.34×10^6	6.47×10^6
Lithium (Li)	1.24×10^4	2.76×10^4
Manganese (Mn)	1.94×10^6	1.94×10^7
Nickel (Ni)	3.68×10^5	1.54×10^6
Niobium (Nb)	1.07×10^4	4.03×10^4
Silicon (Si)	1.18×10^6	5.07×10^6
Tin (Sn)	4.95×10^4	3.00×10^5
Titanium (Ti)[b]	1.28×10^6	5.07×10^6
Tungsten (W)	2.18×10^4	7.73×10^4
Vanadium (V)	3.00×10^4	8.18×10^4

[a]U.S. Bureau of Mines Mineral Commodity Profiles.

[b]Use of metals and nonmetals combined.

Table C-6. Projected Probable Average Annual Growth Rate For Primary Metal 1977-2000[a]

Metal	United States (%)	World (%)
Aluminum (Al)	5.2	5.5
Beryllium (Be)	4.1	2.2
Boron (B)	3.9	3.6
Chromium (Cr)	3.4	3.6
Cobalt (Co)	3.3	3.6
Copper (Cu)	2.9	3.8
Iron (Fe)	1.6	2.9
Lead (Pb)	1.9	2.8
Lithium (Li)	5.4	6.2
Manganese (Mn)	1.6	2.9
Nickel (Ni)	3.2	3.6
Niobium (Nb)	5.6	4.9
Silicon (Si)	3.1	3.6
Tin (Sn)	0.3	1.0
Titanium (Ti)[b]	4.3	5.0
Tungsten (W)	4.9	3.2
Vanadium (V)	5.2	4.4

[a]U.S. Bureau of Mines Mineral Commodity Profiles.

[b]Use of metals and nonmetals combined.

Table C-7. Projected Probable Cumulative Demand[a] For Primary Metal to the Year 2000

Metal	United States (tonnes)	World (tonnes)
Aluminum (Al)	2.50×10^8	8.70×10^8
Beryllium (Be)	2.36×10^3	4.80×10^3
Boron (B)	4.09×10^6	1.42×10^7
Chromium (Cr)	1.73×10^7	8.12×10^7
Cobalt (Co)	4.89×10^4	8.00×10^5
Copper (Cu)	5.45×10^7	2.79×10^8
Iron (Fe)	3.43×10^9	2.17×10^{10}
Lead (Pb)	2.59×10^7	2.17×10^{10}
Lithium (Li)	1.74×10^5	3.63×10^5
Manganese (Mn)	3.73×10^7	3.31×10^8
Nickel (Ni)	6.09×10^6	2.42×10^7
Niobium (Nb)	1.46×10^5	5.88×10^5
Silicon (Si)	1.96×10^7	8.15×10^7
Tin (Sn)	1.16×10^6	6.60×10^6
Titanium (Ti)	2.00×10^7	7.36×10^7
Tungsten (W)	3.08×10^5	1.28×10^6
Vanadium (V)	4.27×10^5	1.24×10^6

[a]U.S. Bureau of Mines Mineral Commodity Profiles.

Table C-8. Recent Price Information[a] For Metals as Unalloyed Primary Ingot

Metal	Current Price ($/kg)	Year
Aluminum (Al)	1.14	1977
Beryllium (Be)	215.60[b]	1978
Boron (B)	0.14[c]	1978
Chromium (Cr)	0.46	1976
Cobalt (Co)	55.00	1979
Copper (Cu)	1.46	1978
Iron (Fe)	0.34	1978
Lead (Pb)	1.12	1976
Lithium (Li)	3.08[d]	1978
Manganese (Mn)	0.14	1978
Nickel (Ni)	4.58	1978
Niobium (Nb)	0.97	1977
Silicon (Si)	6.01	1976
Tin (Sn)	11.77	1977
Titanium (Ti)	6.56	1977
Tungsten (W)	21.49	1977
Vanadium (V)	11.40[e]	1976

[a] U.S. Bureau of Mines Mineral Commodity Profiles.

[b] Prices quoted in the American Metal Market as of June 1979 were: Vacuum cast ingot, $264/Kg; Be powder (97%), $227/Kg; and Be rod, $367/Kg.

[c] For borax pentahydrate.

[d] For $LiOH \cdot H_2O$.

[e] For vanadium pentoxide.

Table C-9. Materials Requirements and Estimates of Reserves[a]

(Units of 1000 Tonnes)

Element	STARFIRE Maximum Requirement,[b] 100 Reactors	U.S. Production: From Domestic Ores & Scrap	U.S. Production: Total Production	U.S. Consumption	World Production (1978)	Reserves at Present Prices: U.S.	Reserves at Present Prices: World	Reserves at 3 Times Present Prices[c]: U.S.	Reserves at 3 Times Present Prices[c]: World	Principal Present Sources
Al	46	960	4,350	5,380	13,860	8,500	5,450,000	∿5,000,000	Very Large	Australia, Guinea, Jamaica
B	66	207	207	118	390	∿28,500	∿124,000	Very Large		U.S.A., Turkey
C	167									
Cr	124	43[e]	43[e]	∿534	3,180	None	11,000,000	7,300	20,000,000	S. Africa, U.S.S.R., Albania
Nb	10	0	3	3	11	None	10,000[d]	∿60	>20,000	Brazil, Canada, Malaysia
Cu	219	1,780	1,785	2,250	7,620	107,000	∿500,000	No data	No data	U.S.A. Chile, Zambia, Zaire
Fe	1,590	52,000	79,000	79,800	485,600	>10,000,000	100,000,000	>20,000,000	Very Large	(Iron Ore) U.S.A., Canada, Venezuela
Pb	38	1,026	1,090	1,440	3,506	26,000	157,000	>40,000	>500,000	Canada, Mexico, Peru
Li	187	∿6	∿6	3.9	NA	450-600	2,000	2,500	>10,000	U.S.A.
Ti	185	NA	15	17	46	17,700	235,000	Large	Very Large	Australia
Mn	190	Small	110	1,280	10,190	None	>14,000,000	>30,000	>20,000,000	Gabon, Brazil, S. Africa, Australia, U.S.S.R.
Sn	2	Small	23	49[f]	247	740	10,000	No data	720,000	S. E. Asia, Malaysia, U.S.A.
Mg	0	∿100	∿100	∿100	140	Inexhaustible				
V	1	5.3	5.3	7.2	32	113	10,000	600	20,000	U.S.A., S. Africa, U.S.S.R.
Ni	127	47	79	210	588	180	54,000	12,700	136,000	Canada, New Caledonia, U.S.SR.
Zr	28	NA	NA	<3	<6	3,550	18,000	No data	Very Large	U.S.A., Australia
W	84	4.1	10.2	9.3	43.0	125	1,990	No data	No data	China, U.S.A., Bolivia, Thailand
Mo	9	60	60.0	30.0	98.0	4,500	9,300	27,000	No data	U.S.A., Canada, Chile
Co	0	0.3	0.3	8.5	30.8	None	72,600	No data	No data	Zaire, New Caledonia, Australia
Be	1	<0.1	<0.2	<0.1	<0.3	28	380	55	No data	U.S.A., Brazil, S. Africa

[a] Information on U.S. and World production and consumption are from the U.S. Bureau of Mines. Information on reserves is partly from the U.S. Bureau of Mines, partly from Brobst and Pratt, and partly from other miscellaneous sources.

[b] Reactor only.

[c] Includes reserves at present prices.

[d] Reserves in non-Communist countries only.

[e] From stainless steel scrap.

[f] Primary

Table C-10. Total Resource Requirements[a] for 100 STARFIRE Reactors

Group and Metal	Total (1000 tonnes)
Group A - Materials available from domestic mines at market prices	
Beryllium (Be)	1
Boron (B)	66
Carbon (C)	167
Copper (Cu)	219
Iron (Fe)	1,590
Lead (Pb)	38
Lithium (Li)	187
Molybdenum (Mo)	9
Silicon (Si)	7
Zirconium (Zr)	28
Group B - Materials available from domestic mines at three times (3X) market prices	
Aluminum (Al)	46
Chromium (Cr)	134
Titanium (Ti)	185
Manganese (Mn)	190
Nickel (Ni)	127
Tin (Sn)	2
Vanadium (V)	1
Niobium (Nb)	10
Group C - Materials available in adequate amounts only from foreign sources	
Tantalum (Ta)[b]	6
Tungsten (W)[c]	84

[a] Reactor only, assuming all 100 reactors are operating in parallel (i.e., no advantage is taken of the possible recyclability of materials from one reactor to another).

[b] Tantalum (as Ta-5W) is only one of several candidates for the reference design limiter (see Sec. C-3).

[c] Tungsten can be replaced by another shielding material (see Sec. C-3).

Table C-11. Comparison of E. Cameron et al. (UWFDM-313) Beryllium Reserve and Resource Values with U.S. Bureau of Mines[a] Values

Reference	Domestic Reserves (tonnes)	Domestic Resources[b] (tonnes)	World Reserves (tonnes)	World Resources[b] (tonnes)
Cameron				
a. pegmatitic only[c]	270	820	820	5400
b. pegmatitic plus nonpegmatitic[c]	54700	282000	38500	679000
U.S. Bureau of Mines	25400	72600	380000	1105000
Ratio (Cameron to USBM)				
a. pegmatitic only	0.0107	0.0112	0.0021	0.0049
b. pegmatitic plus nonpegmatitic	2.15	3.84	0.222	0.614

[a]Ref. Mineral Commodity Profile, "Beryllium" (Aug. 1979) which was not included in the Cameron report.

[b]Includes reserves.

[c]These were the values in which Cameron et al. expressed confidence.

Table C-12. U.S. Net Import Reliance on Selected Minerals and Metals as a Percentage of 1978 Consumption[a]

Mineral or Metal	Net Import Reliance (%)
Niobium[b]	100
Mica (sheet)	100
Strontium	100
Manganese	98
Tantalum	97
Cobalt	97
Aluminum (bauxite & alumina)	93
Chromium[b]	92
Platinum-group metals	91
Asbestos	84
Fluorine	82
Tin	81
Nickel[b]	77
Cadmium	66
Zinc	62
Potassium	61
Selenium	61
Mercury	57
Gold	54
Tungsten[b]	50
Antimony	48
Silver	41
Barium	40
Titanium (ilmenite)	39
Gypsum	34
Iron ore	29
Vanadium	27
Copper	19

[a]Source: Bureau of Mines, U.S. Department of Interior (import-export data from the Bureau of the Census).
[b]U.S. resource would be strongly impacted by requirements for 100 STARFIRE reactors.

TABLE OF CONTENTS

		Page
D.1	INTRODUCTION AND SUMMARY	D-1
D.2	SEISMIC DESIGN GUIDELINES	D-2
	D.2.1 Design Philosophy	D-2
	D.2.2 Primary Structure Design	D-4
	D.2.3 Subsystem Component Design	D-5
	D.2.4 Variance from Subsystem Design Guideline	D-7
	D.2.5 Subsystem Design Based on Floor Response Spectra	D-8
D.3	STARFIRE REACTOR FLOOR RESPONSE	D-8
	D.3.1 Soil-Foundation-Reactor Dynamic Model	D-8
	D.3.2 Earthquake Time History	D-11
	D.3.3 Floor Response Results	D-11
D.4	STARFIRE TOROIDAL FIELD COIL SEISMIC ANALYSIS	D-11
	D.4.1 Structure Description	D-15
	D.4.2 TF Coil System Dynamic Model Development	D-15
	D.4.3 Seismic Response Results	D-18
	D.4.4 Analysis Limitations	D-20
D.5	CONCLUSIONS	D-21

List of Figures

Number		Page
D-1	Seismic risk map of the United States	D-4
D-2	Equivalent static horizontal acceleration for seismic risk Zone 2	D-6
D-3	Equivalent static vertical acceleration for seismic risk Zone 2	D-6
D-4	STARFIRE/foundation/soil dynamic model	D-10
D-5	El Centro (1940) earthquake time history-simulated	D-12
D-6	Ground response spectra comparison	D-12
D-7	STARFIRE floor response - horizontal (Z)	D-13
D-8	STARFIRE floor response - vertical	D-13
D-9	STARFIRE floor response spectrum - horizontal seismic Zone 2, 2 percent damping	D-14
D-10	STARFIRE floor response spectrum - vertical seismic Zone 2, 2 percent damping	D-14
D-11	STARFIRE reference design	D-15
D-12	STARFIRE TF coil/centerpost dynamic model	D-16
D-13	STARFIRE TF coil system 'rigid' model	D-17
D-14	STARFIRE TF coil system dynamic response model	D-19

List of Tables

Number		Page
D-1	Typical Damping Coefficient Values for Various Structural Systems	D-7
D-2	STARFIRE Soil-Foundation-Reactor Dynamic Model Properties	D-9
D-3	TF Coil Preliminary Modal Analysis Results	D-17
D-4	TF Coil System Modal Analysis Results	D-18
D-5	Effect of Centerpost Support Strut Properties on TF Coil Modal/Seismic Response Results	D-20

D.1 INTRODUCTION AND SUMMARY

This appendix presents the results of a seismic evaluation of the STARFIRE fusion reactor conceptual design, performed by McDonnell Douglas Astronautics Company (MDAC-St. Louis). The evaluation was limited in scope to establishment of criteria and procedures required prior to design, and to seismic analysis of one particular subsystem of the reactor. The study was divided into three phases:

(1) development of seismic design guidelines for fusion energy commercial power plants (Sec. D.2);

(2) computation of floor response spectra to be used in seismic analysis of floor-mounted reactor subsystems (Sec. D.3); and

(3) performance of seismic analysis of the cryogenic structure (helium vessels) of the TF coils, centerpost, and support structure system (Sec. D.4).

The seismic design guidelines developed were general and did not consider specific site geologic conditions or structure-equipment dynamic characteristics. Major recommendations of the guidelines were that

(a) reactor design meet seismic risk Zone 2 requirements,

(b) primary reactor structure be designed according to seismic criteria provisions of the Uniform Building Code (UBC)[1],

(c) the initial design use reactor subsystem equivalent static design acceleration of ± 4.4 g, applied simultaneously in three directions, and that

(d) dynamic analysis techniques be used to verify structural and operational integrity of critical reactor subsystems and equipment.

The guidelines provided a basis for further seismic analysis and recommended a dynamic analysis technique for reactor subsystem design based on floor response spectra. This technique was used in the seismic study presented here. STARFIRE floor response spectra were computed from the results of a dynamic transient response analysis of a soil-foundation-reactor dynamic model subjected to earthquake excitation. Peak floor spectrum accelerations were ± 2.75 g horizontally and ± 1.93 g vertically.

The TF coil cryogenic structure was identified as a critical reactor subsystem potentially susceptible to earthquake excitation and was therefore analyzed. Maximum computed Zone 2 horizontal coil displacement was ± 7.95 cm (± 3.13 in) relative to the reactor floor which was considered to result in excessive loads in the strut system connecting the dewar and helium vessel of each TF coil. Axial dynamic response forces in the centerpost support struts exceeded critical buckling load capability, 4.36×10^6 Kg (9.6×10^6 lb) compared to $P_{cr} = 3.64 \times 10^6$ Kg (8.0×10^6 lb). Parametric study results indicated that this unacceptable dynamic response could be adequately reduced by minor detail modification of the centerpost support strut baseline design, either by increasing cross sectional area or by changing material.

D.2 SEISMIC DESIGN GUIDELINES

This section presents tentative seismic design guidelines prepared by MDAC-St. Louis for fusion energy commercial power plants. The guidelines were based on building code requirements[1-3], U.S. Nuclear Regulatory Commission (NRC) recommendations[4] and general seismic design documents.[5-14]

D.2.1 Design Philosophy

The basic design philosophy presented in this section was predicated on the safety aspects of fusion energy relative to fission reactors and the desire to provide an efficient commercial power plant design with the most widespread application. Structure and equipment must be categorized with respect to safe plant operation and shutdown capability. Development of general design criteria for power plants to be located in any geographic area of the U.S. necessitated a trade-off study to determine whether design for most severe seismic intensity (Zone 3) places an unrealistic burden on design for the vast majority of applications (Zones 1 and 2).

D.2.1.1 Classification of Structures and Equipment

NRC regulations for nuclear fission power facilities classify structures and equipment into three categories[4]:

Category I - Those structures or equipment whose failure might cause or contribute to a nuclear incident, or alternatively, those structures or equipment which are believed necessary for containment of fission products and safe shutdown of the plant.

Category II - Structures or equipment essential to power plant operation but whose individual failure would not cause or contribute to a nuclear incident, and would not impair the ability for safe shutdown.

Category III - Structures or equipment convenient to the operation of the facility but not essential to plant dependability or public safety.

Fusion reactors are considered to possess inherent safety and environmental advantages compared to fission reactors as discussed in Ref. 5. The lower hazard assumed during an incident at a fusion power plant was the basis for establishing seismic design guidelines on procedures similar to NRC Category III recommendations.

D.2.1.2 Seismic Risk Zone Applicability

Figure D-1 reproduces the seismic risk map of the mainland United States from the UBC. This map shows by zone the probable severity of earthquake damage. Zone 0 implies no damage, Zone 1 minor damage, Zone 2 moderate damage, and Zone 3 major damage. It is based on the known distribution of damaging earthquakes plotted by the U.S. Coast and Geodetic Survey. Earthquake intensity was considered in assigning zonal rating but probable frequence of occurrence was not a criterion.

Design for most severe conditions (Zone 3) places an undue handicap on seismic design of structure for the majority of the U.S. Zone 3 locations comprise only about 13% of the United States by area and 11% by population (based on 1970 census). Exclusive of California, Zone 3 locations are 8.5% of the country by area but only 2.5% by population.

Zone 2 design, sufficient for almost 90% of the country, is easier to achieve and is more economical than that for Zone 3 since earthquake excitation is much more severe for Zone 3 compared to Zone 2 (0.33 g vs. 0.13 g). The geographic area not covered by Zone 2 design can be further reduced as follows. It is feasible that non-California Zone 3 areas be served by

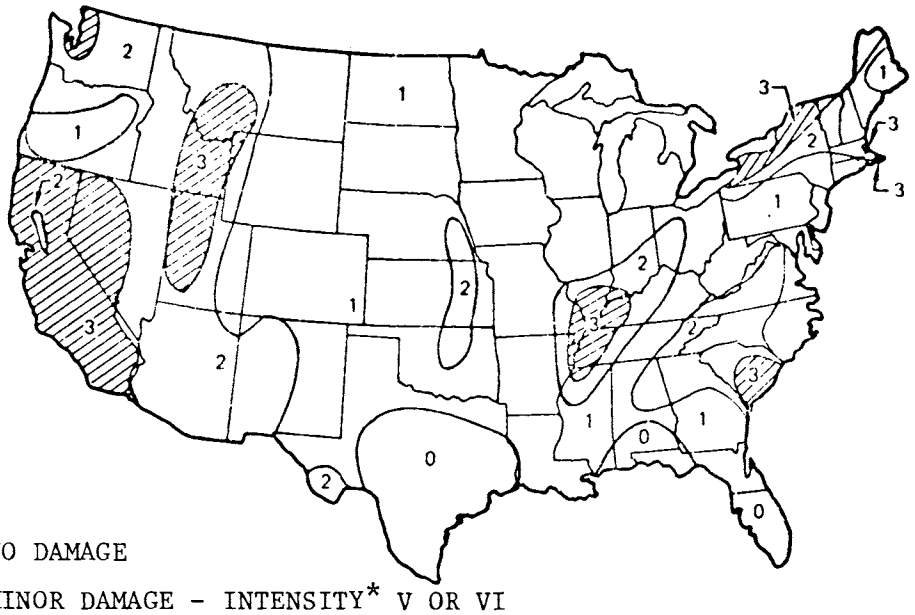

ZONE 0 - NO DAMAGE

ZONE 1 - MINOR DAMAGE - INTENSITY* V OR VI

ZONE 2 - MODERATE DAMAGE - INTENSITY VII

ZONE 3 - MAJOR DAMAGE - INTENSITY VII OR HIGHER

*MODIFIED MERCALLI INTENSITY

Figure D-1. Seismic risk map of the United States. (Uniform Building Code, 1973)

commercial plants located in less severe zones. Similarly, service in eastern California and western Nevada could be provided by facilities in adjacent Zones 1 or 2. This would reduce the area not covered by a Zone 2 design to western California. Therefore, seismic guidelines and analysis presented in this document were based on Zone 2 design for a commercial fusion facility, realizing that construction in western California might necessitate a unique design with more stringent requirements.

D.2.2 Primary Structure Design

Per Ref. 4, NRC Category III structure and equipment are to be designed to provisions of the UBC, unless local building codes are more stringent. Horizontal forces to be considered in seismic design of buildings and building appendages are established in the UBC. These design forces are based on structure type, location, and dynamic response characteristics.

UBC earthquake design forces are defined as lateral base shear, V, distributed over the building height. Maximum V is 0.15W for Zone 2, where W is the total dead load of the structure. Appendage forces vary from 0.10 to 0.20 times the appendage weight for various parts of buildings regardless of seismic risk zone. Static design accelerations for primary reactor structure will therefore be equal to or less than 0.2 g. The provisions of the UBC should be applied to each power plant structure for compliance with these seismic design guidelines.

D.2.3 Subsystem/Component Design

A technique for determining equivalent static accelerations for NRC Category III supported equipment and components is established in Ref. 7 consistent with the NRC Standard Review Plan[6]. A factor of 8.0 is to be applied to ground response spectrums to establish equivalent static accelerations. NRC Regulatory Guide 1.60[8] horizontal and vertical seismic design ground response spectrums are normalized to 1.0 g horizontal ground acceleration. Peak horizontal ground acceleration in common usage[9-10] for seismic risk Zone 2 is 0.13 g. Renormalizing NRC 1.60 spectra to the 0.13 g horizontal ground acceleration value and applying the factor of 8.0 yielded design curves of equivalent static acceleration versus subsystem/component natural frequency. Figures D-2 and D-3 are Zone 2 horizontal and vertical seismic design curves respectively for various values of damping coefficient.

Table D-1 presents typical damping coefficient data for various structural systems per NRC Regulatory Guide 1.61[11]. With the exception of small diameter piping systems, the minimum damping value is two percent of critical for typical building structures. The two percent damped spectra for Zone 2 (Fig. D-2 and D-3) were utilized here to define general static design accelerations.

Peak acceleration values were ± 4.4 g horizontally (at 2.5 Hz) and ± 4.2 g vertically (at 3.5 Hz). Equivalent static design accelerations for conceptual design of supported equipment and components were established as ± 4.4 g applied simultaneously in the vertical and two horizontal directions.

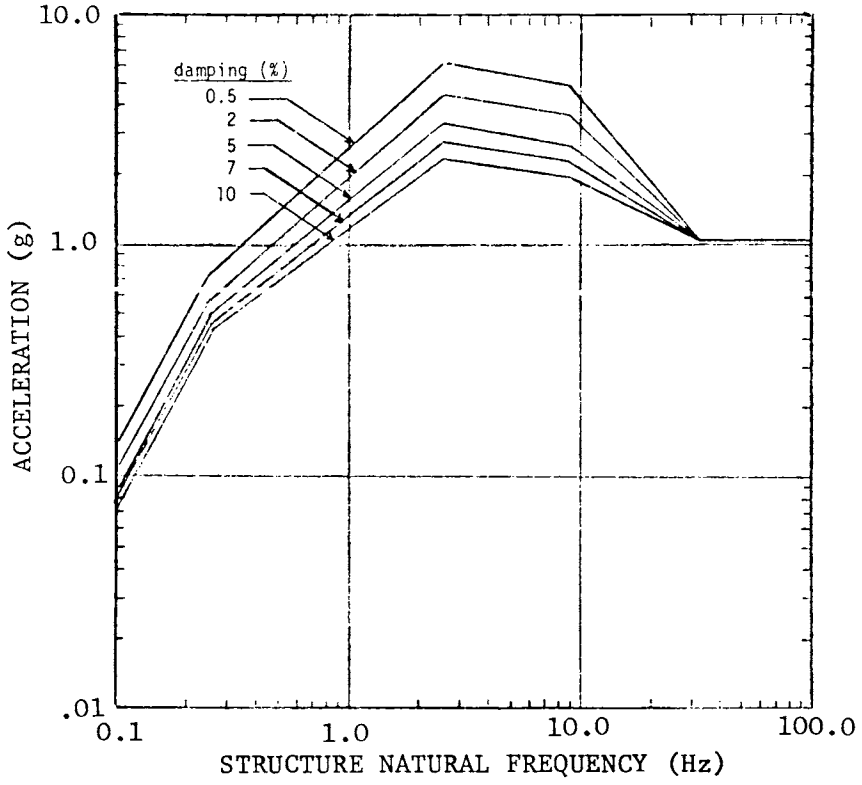

Figure D-2. Equivalent static horizontal acceleration for seismic risk zone 2.

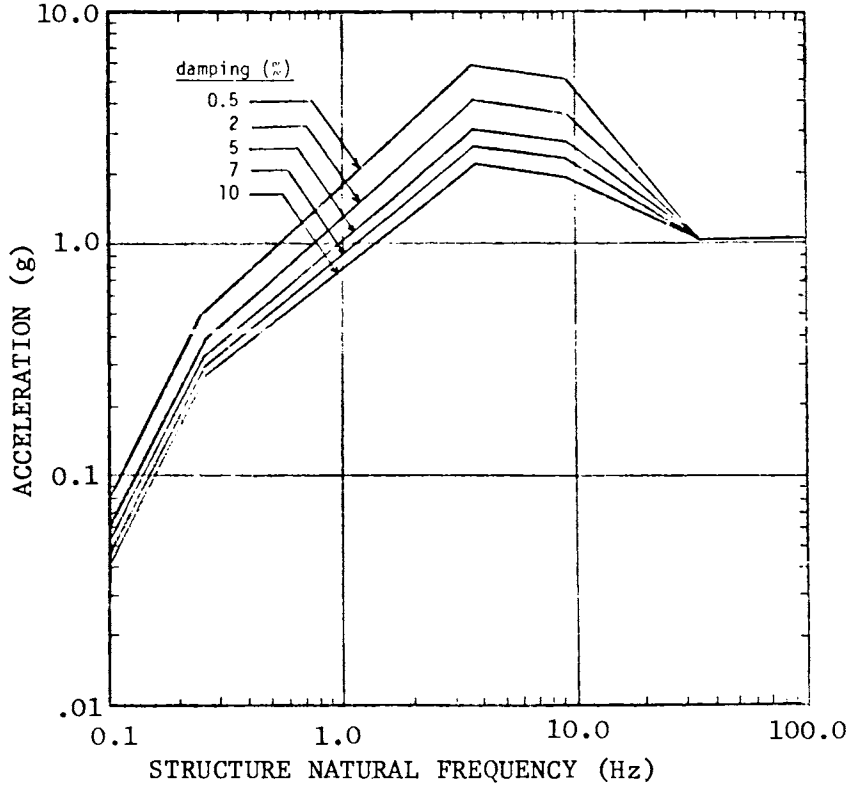

Figure D-3. Equivalent static vertical acceleration for seismic risk zone 2.

Table D-1. Typical Damping Coefficient Values For Various Structural Systems

Structural System	Per Cent of Critical Damping
Equipment and large diameter piping systems, pipe diameter greater than 12 inches.	2-3
Small diameter piping systems, pipe diameter equal to or less than 12 in.	1-2
Welded steel structures	2-4
Bolted steel structures	4-7
Prestressed concrete structures	2-5
Reinforced concrete structures	4-7

D.2.4 Variance from Subsystem Design Guideline

In Sec. D.2.3, a static design acceleration of ± 4.4 g in all directions was established. For particular subsystems, the designer may deviate from this value by either of two methods:

(a) Verification that reactor primary structure damping values are not equal to two percent. Design accelerations are then the maximum spectral values for the appropriate damped curves of Figs. D-2 and D-3.

(b) Performance of modal analyses to differentiate between dynamic characteristics of individual components. Static acceleration is then based on component resonant frequency and the corresponding spectral value from Figs. D-2 and D-3.

Establishment of the ± 4.4 g design acceleration was structure independent, requiring no information on STARFIRE. The above procedures require some knowledge of the structure, which becomes available during conceptual design activity. An alternate, and preferred, method of subsystem design, which likewise requires reactor design data, is discussed in Sec. D.2.5.

D.2.5 Subsystem Design Based on Floor Response Spectra

The ± 4.4 g static design accleration is to be used for preliminary conceptual design development. As the design evolves, dynamic analyses are performed to verify design adequacy for floor-supported equipment. The recommended procedure follows.

a. Generation of a mathematical model representing soil, foundation, and primary reactor structure.
b. Selection of an artificial acceleration time history to be used as bedrock input to the dynamic model.
c. Dynamic transient response analysis yielding floor time history response to the input acceleration.
d. Computation of floor response spectrums for the floor time history response.
e. Performance of seismic response spectrum analyses of floor mounted subsystems to verify structural integrity.

The basic difficulty of this method involves definition of the bedrock acceleration time history. This simulated earthquake record should yield a response spectrum consistent with that from NRC Regulatory Guide 1.60. Sections D.3 and D.4 discuss the application of this procedure to STARFIRE.

D.3 STARFIRE REACTOR FLOOR RESPONSE

This section presents the seismic analysis of the entire STARFIRE reactor and its foundation-soil support system, which utilized the ICES-STRUDL DYNAL computer code. The results defined floor response spectra for use in subsequent seismic analysis of floor-mounted reactor subsystems.

D.3.1 Soil-Foundation-Reactor Dynamic Model

The soil-foundation-reactor system was represented as a three dimensional finite element model shown in Fig. D-4 with properties listed in Table D-2. Foundation stiffness values were calculated by ratioing similar values for the Power Generating Fusion Reactor (PGFR)[12], by a factor relating the size and weight of STARFIRE to PGFR properties. The method of dynamic subgrade[12] was used to calculate the soil spring rates. The vertical subgrade moduli is defined as the pressure which must be applied uniformly to

Table D-2. STARFIRE Soil-Foundation-Reactor Dynamic Model Properties

Inertial Properties:	Node No./ Structure	Weight ($kg \times 10^{-7}$)	Moments of Inertia ($kg\text{-}m^2 \times 10^{-11}$) Torsion-Ixx	Rocking-Iyy	Rocking-Izz
	1/Reactor	15.6	1.563	1.60	0.465
	2/Floor	6.90	1.22	1.056	0.165
	3/Foundation Mat	9.77	1.735	1.505	0.236

Stiffness Properties:	Spring No./ Structure	Stiffness Values Vertical (N/m)	Horiz-Y (N/m)	Horiz-Z (N/m)	Torsion (N-m/rad)	Rocking-Y (N-m/rad)	Rocking-Z (N-m/rad)
	1/Foundation	9.11×10^{11}	1.40×10^{11}	2.77×10^{11}	1.2×10^{14}	2.4×10^{13}	1.22×10^{13}
	2/Soil	4.71×10^{11}	2.42×10^{11}	2.68×10^{11}	1.25×10^{15}	2.09×10^{14}	1.44×10^{13}

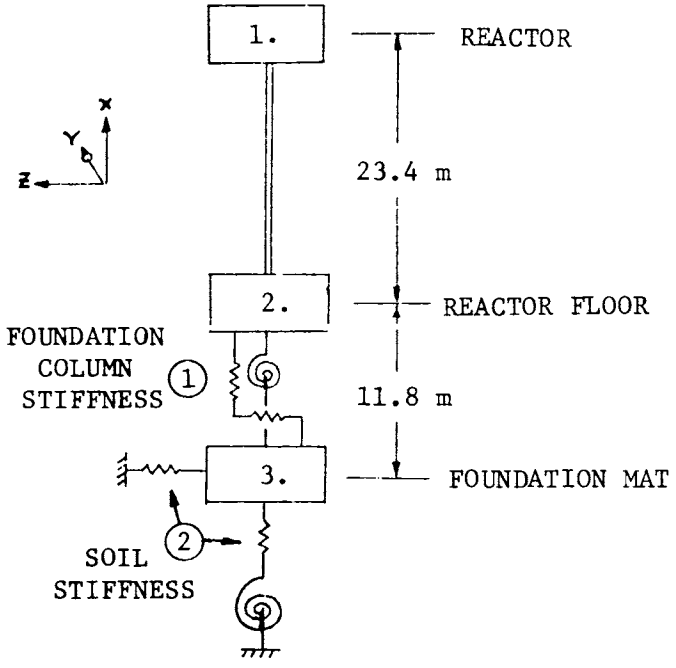

Figure D-4. STARFIRE/foundation/soil dynamic model.

a plate resting on soil to displace it one unit of length. A representative range of subgrade modulus based on plate bearing field tests, 3.0×10^7 N/m^3 to 1.0×10^8 N/m^3, was used in combination with the foundation geometry to obtain linear elastic spring rates for conditions of weak soil to rock. A value of 5.0×10^7 N/m^3 was used in this analysis. The equations used to calculate the spring rates are shown below:

$Ksv = Kz\ Az\ \lambda v$ — Ksv = soil vertical spring rate

$Ksh = 0.5\ Kz\ Ah\ \lambda\eta$ — Ksh = soil horizontal spring rate

$Ks = 2.0\ Kz\ I\ \lambda\phi$ — $Ks\phi$ = soil rocking spring rate

Kz = vertical subgrade modulus

Az - contact area between foundation and soil for vertical motion

Ah - contact area between foundation and soil for horizontal motion

I - area moment of inertia of foundation about rocking axis through foundation centroid

$\left.\begin{matrix}\lambda v \\ \lambda\eta \\ \lambda\phi\end{matrix}\right\}$ - stiffening factors related to embedment depth

Realistic equivalent viscous damping ratios are .05 to .15 for soil and .04 and .07 for foundation structure[7]. For this analysis, modal damping of .07 (7% of critical) was used as a reasonable value for all modes.

D.3.2 Earthquake Time History

Reference 13 presents a number of simulated earthquake time histories. The horizontal ground acceleration time history selected (Fig. D-5) is representative of the 1940 El Centro, California earthquake. Figure D-6 shows the 7% damped response spectrum for this time history compared to the corresponding NRC 1.60 spectrum normalized to maximum ground acceleration. Adequate correlation was noted and the Fig. D-5 earthquake record, normalized to Zone 2 maximum acceleration was used as bedrock input to the dynamic model.

D.3.3 Floor Response Results

The input time history was applied simultaneously in three mutually perpendicular directions. The vertical time history magnitude was two-thirds of the horizontal input shown in Fig. D-5. Resulting horizontal and vertical floor response time histories are presented in Fig. D-7 and D-8. Two percent damped floor response spectra were calculated from these time histories. (Two percent is the minimum damping value for building structures recommended by the NRC Regulatory Guide 1.61.) The resulting floor response spectra with smoothing and peak broadening per NRC Guide 1.122[14], are shown in Fig. D-9 and D-10. Peak spectral accelerations were ± 2.75 g (2.3 to 5.0 Hz) in the horizontal direction and ± 1.93 g (4.0 to 7.5 Hz) in the vertical direction. These computed floor spectra can be used as base input for seismic response spectrum analysis of floor mounted reactor subsystems.

D.4 STARFIRE TOROIDAL FIELD COIL SEISMIC ANALYSIS

This section presents the seismic response spectrum analysis of the STARFIRE TF coil system performed using the NASTRAN computer code. The TF coil structure was chosen as a reactor subsystem particularly susceptible to earthquake excitation since it is massive and base supported. This type of structure generally has low natural frequencies which can coincide with dominant earthquake input frequencies.

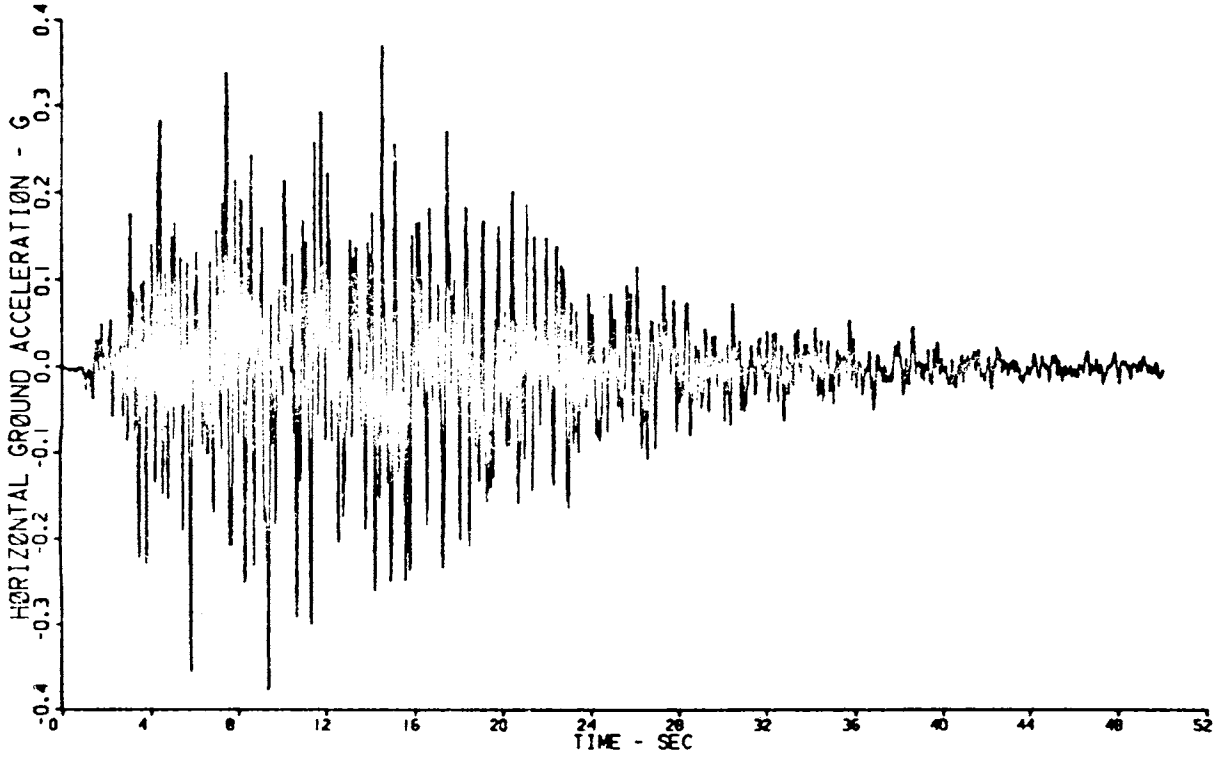

Figure D-5. El Centro (1940) earthquake time history-simulated.

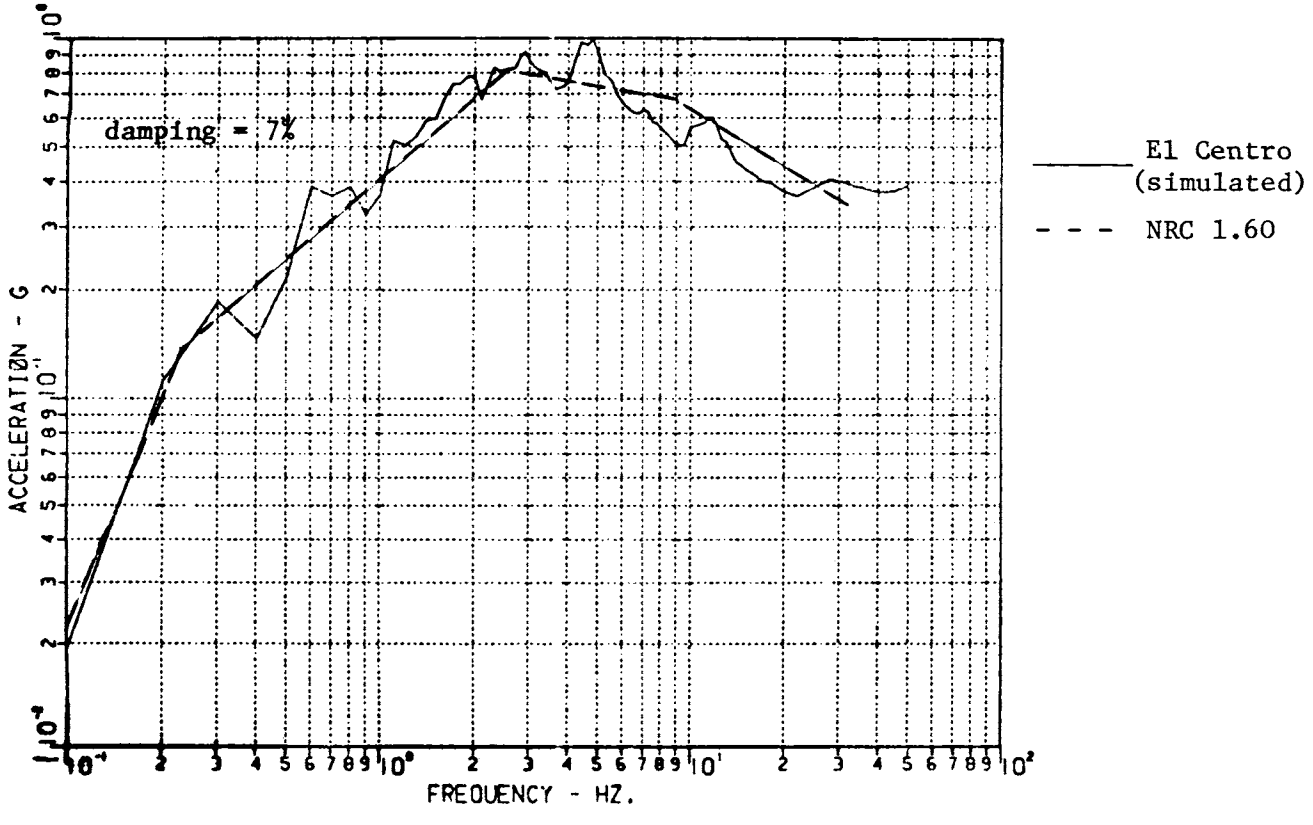

Figure D-6. Ground response spectra comparison.

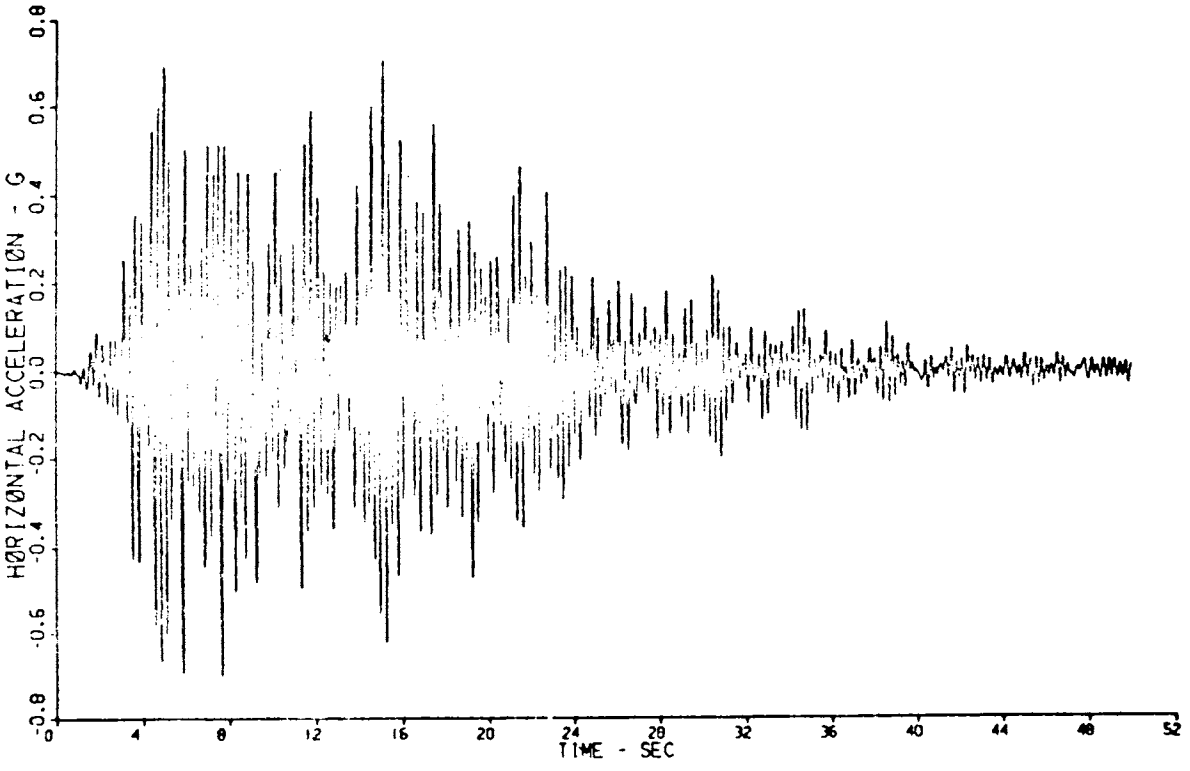

Figure D-7. STARFIRE floor response - horizontal (z).

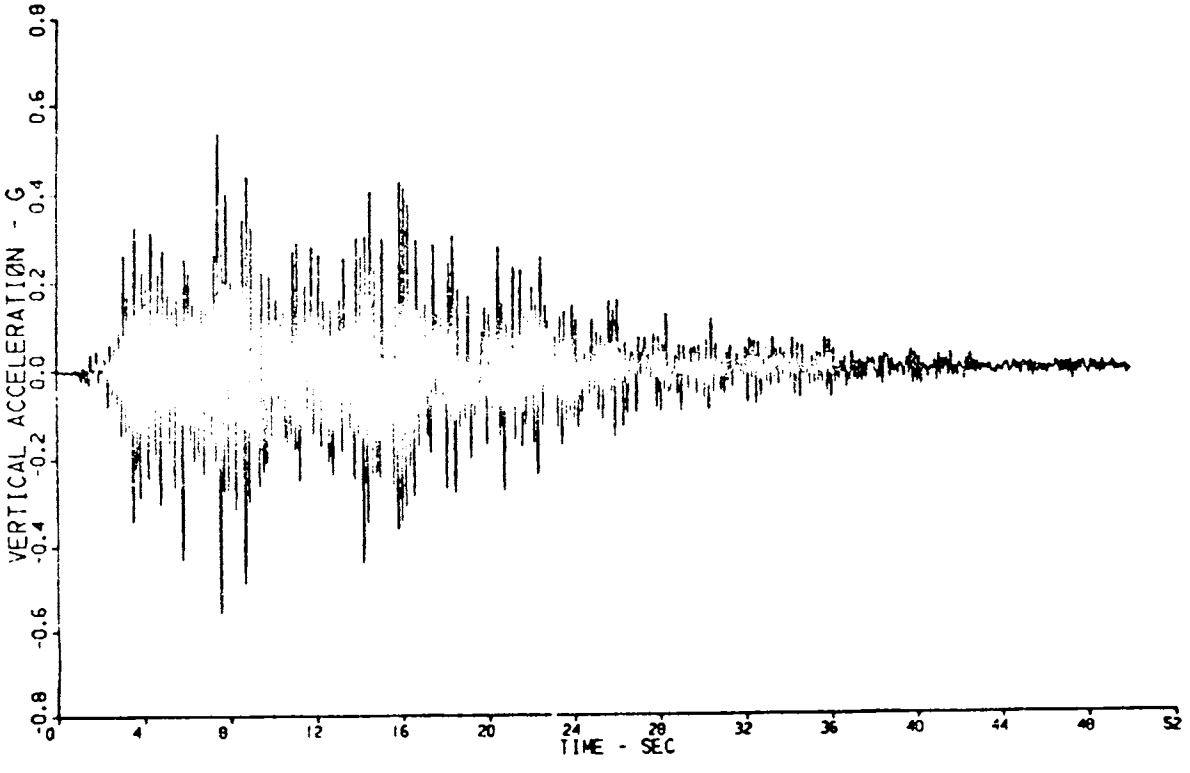

Figure D-8. STARFIRE floor response - vertical.

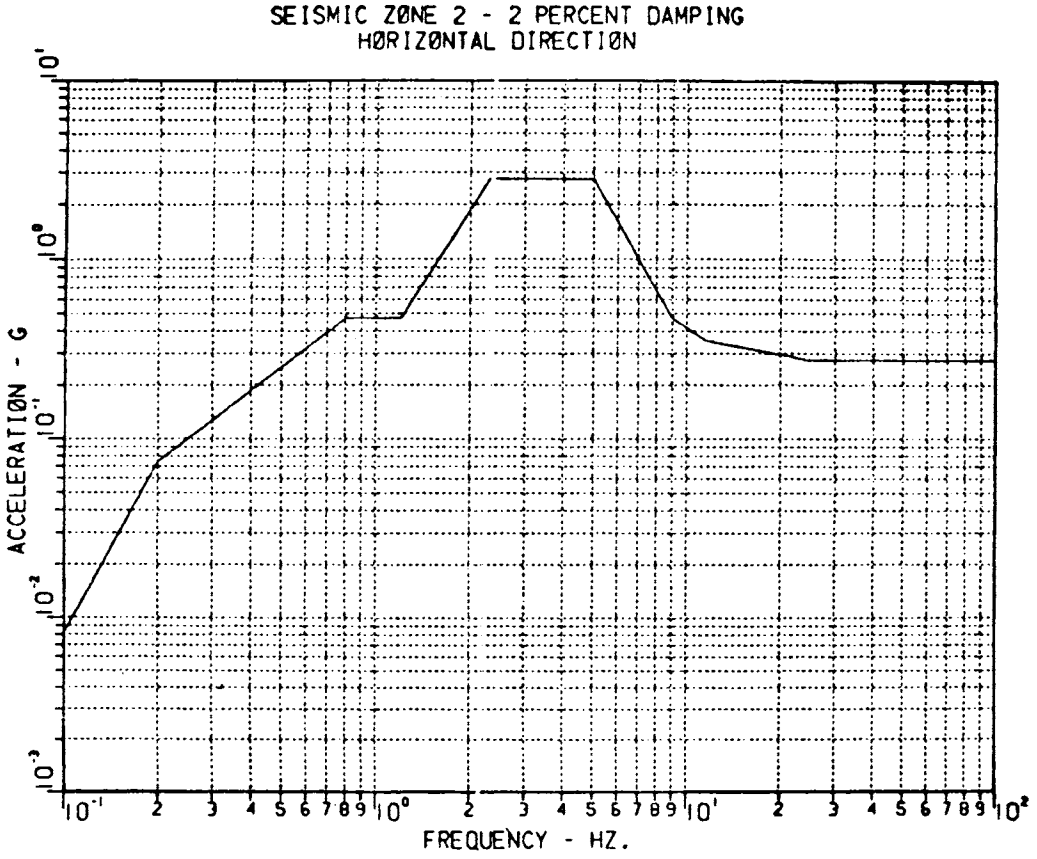

Figure D-9. STARFIRE floor response spectrum.

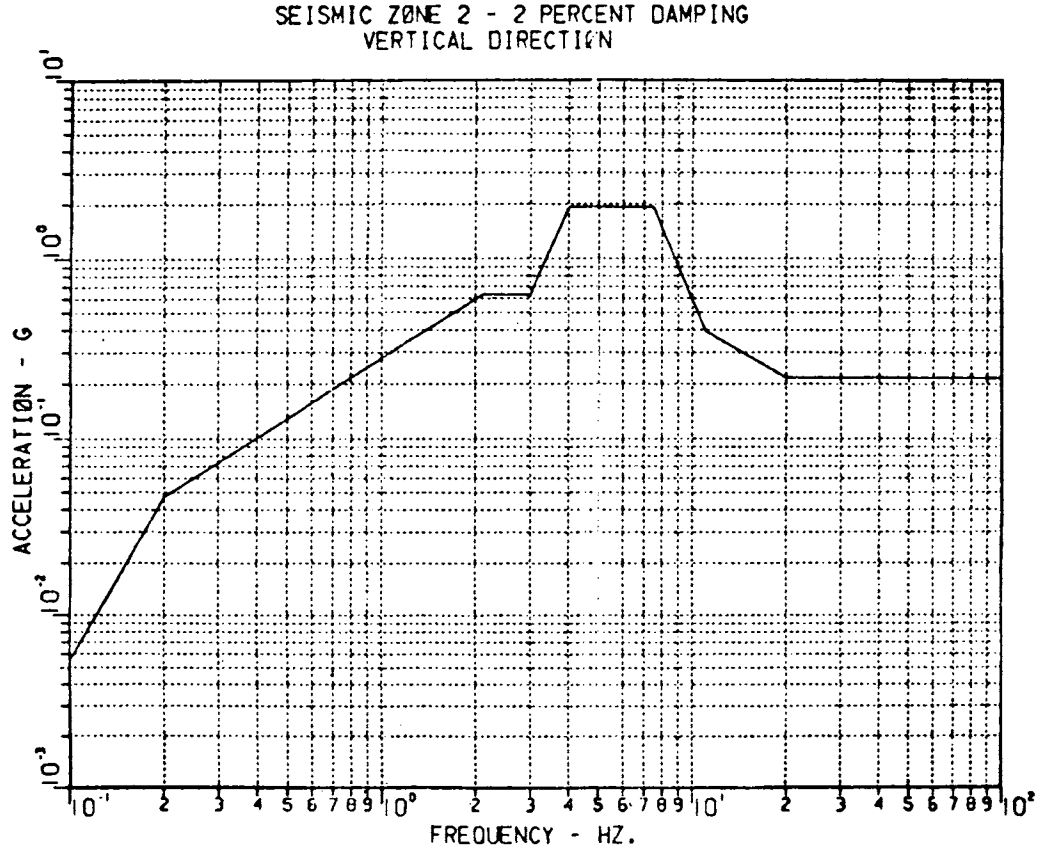

Figure D-10. STARFIRE floor response spectrum.

D.4.1 Structure Description

A cross sectional view of major elements of the STARFIRE reactor is presented in Fig. D-11. Relative displacements between each coil and the room temperature (RT) vacuum tank in which the coil is encased are of primary interest during an earthquake. For this analysis, motion of the RT vacuum tank was assumed not significant compared to that of the more flexible TF coil. The twelve TF coils are supported by a common centerpost which is mounted on six inverted V truss supports to the reactor floor. The twelve fiberglass struts, comprising the truss supports, are considered the most flexible members of the coil support system.

D.4.2 TF Coil System Dynamic Model Development

Since the RT vacuum tank is assumed to be relatively rigid, it was not included in this analysis. The cryogenic structure, consisting of the TF coils, the centerpost, and the inverted V trusses, was analyzed. A comprehensive dynamic model of the "cold" structure including stiffness and iner-

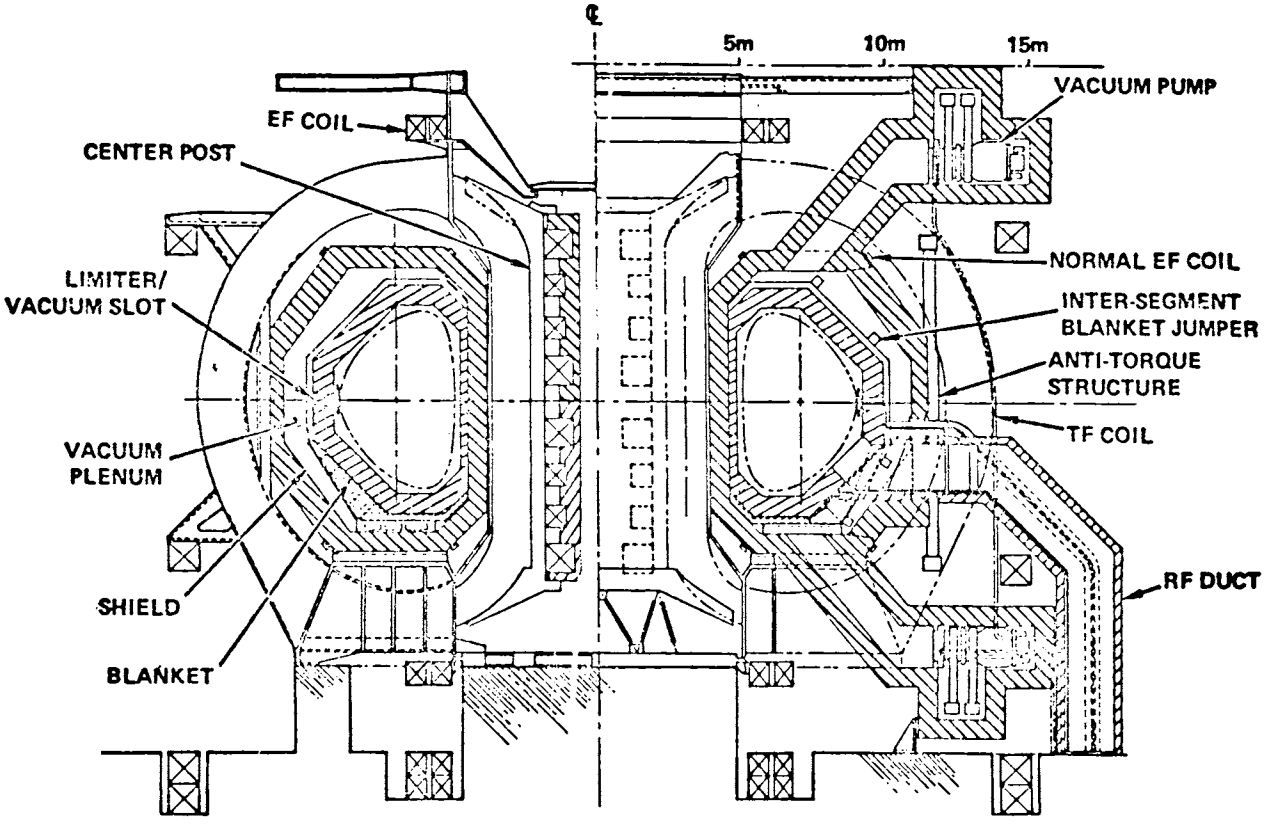

Figure D-11. STARFIRE reactor design for seismic analysis.

tial representations of all twelve coils and their support structures was shown to be unnecessary by results of preliminary analyses of a simplified dynamic model.

The simplified model is referred to as the "rigid" model, in which the centerpost support struts, and the twelve coil/RT vacuum tank vertical connections are elastically represented with the centerpost and coils assumed rigid. This model is shown in Fig. D-12. Justifying use of this model would require verification that centerpost and individual coil modes do not couple with the overall motion of the structure. Therefore, a second dynamic model was developed (Fig.D-13), consisting of one TF coil and a 30° segment of the centerpost. Out-of-plane connections between the coil and RT case are sufficient to reduce the model to two in-plane dimensions. The vertical coil/RT vacuum tank connection was included at the outer coil location.

Modal analyses were performed for both the TF coil/centerpost model and the "rigid" model and results are shown in Table D-3. The 5 Hz centerpost bending mode from the TF coil/centerpost model was considered to be low since only 1/12th of the centerpost stiffness was included in the model. However,

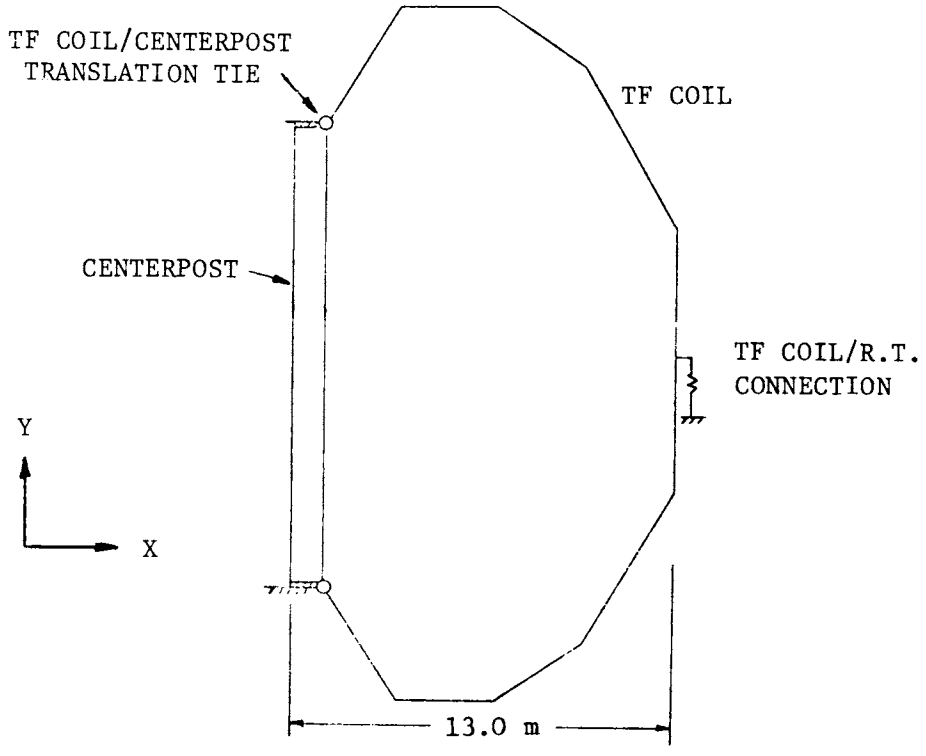

Figure D-12. STARFIRE TF coil/centerpost dynamic model.

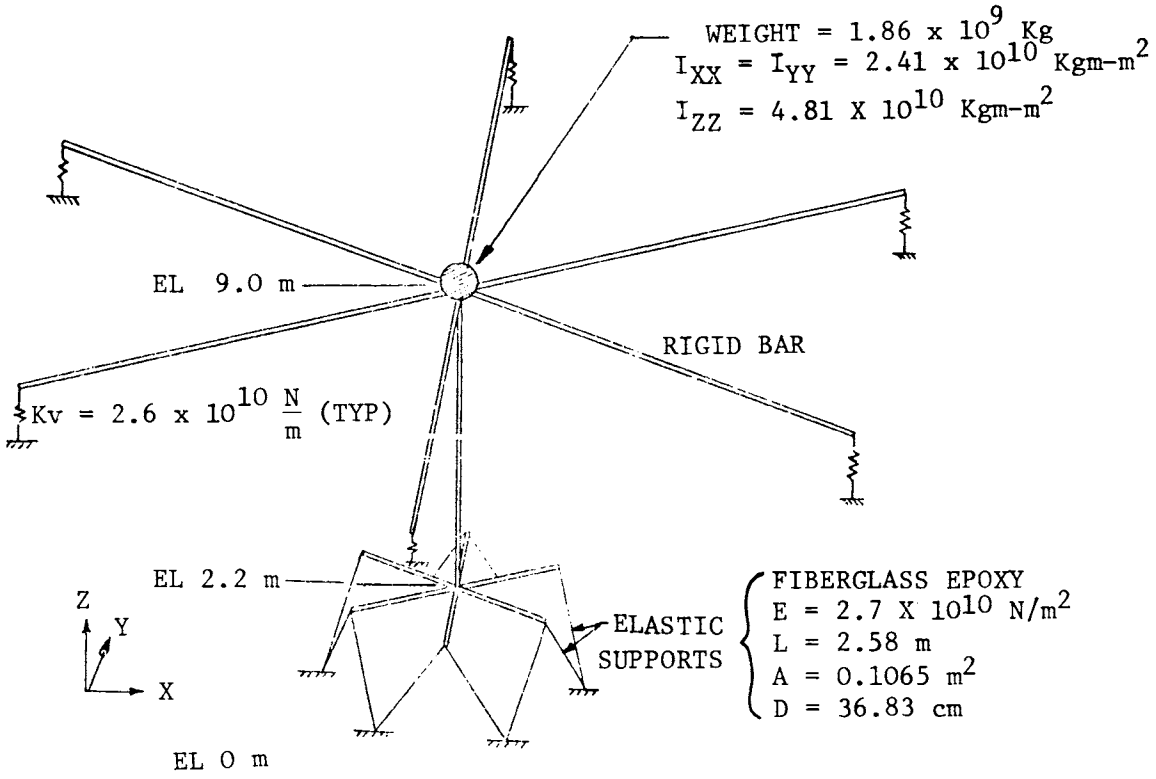

Figure D-13. STARFIRE TF coil system 'rigid' model.

due to the proximity of this frequency with the 3 Hz overall structure mode, the centerpost flexibility should be included in the response analysis. The first bending mode of the individual TF coil had sufficient frequency separation from the overall structure mode, 16.8 Hz compared to 3 Hz, so that the coils were represented as rigid elements in the analysis.

Table D-3. TF Coil Preliminary Modal Analysis Results

Dynamic Model	Frequency (Hz)	Mode Shape Description
"Rigid" Model	3.06	1st horizontal mode
	29.6	1st vertical mode
TF Coil/Centerpost	5.05	1st bending mode of centerpost
	11.1	1st coupled coil/centerpost mode
	16.8	1st coil bending mode

The "rigid" dynamic model was therefore modified to include centerpost flexibility. The revised model, shown in Fig. D-14, consisted of elastic representations of the inverted V, truss supports, centerpost, and the TF coil/RT case outboard connections and rigid representation of the coils. Table D-4 presents modal analysis results for this model.

Table D-4. TF Coil System Modal Analysis Results

Frequency (Hz)	Mode Shape Description
2.91	1st horizontal mode of supports/centerpost
8.02	1st coupled bending mode of centerpost and supports
8.97	2nd horizontal mode of supports/centerpost
25.8	1st vertical mode

Comparison of these results with those of Table D-3 show that:

a) inclusion of centerpost flexibility had little effect on the first horizontal frequency of the system but decreased the vertical frequency by 13%;

b) the 5 Hz centerpost modal frequency from the TF coil/centerpost dynamic model was low as expected.

D.4.3 Seismic Response Results

The floor response spectra of Sec. D.3 were input to the STARFIRE "cold" structure dynamic model of Fig. D-14. Excitation was applied simultaneously in the vertical and two horizontal directions and a root sum square (RSS) combination of individual modal responses was specified to obtain the total system response. The computed maximum horizontal deflection of the coil, ± 7.95 cm (± 3.13 in) relative to the RT vacuum tank was considered excessive in terms of the resultant stresses in the coil/tank strut system. The vertical response of ± 0.4 cm ($\pm .16$ in.) was negligible. In addition to excessive horizontal deflections, peak dynamic axial force computed for the centerpost support struts was 4.36×10^6 kg (9.6×10^6 lb) which exceeded the critical buckling load of 3.64×10^6 kg (8.0×10^6 lb) for those members. The design analyzed, therefore, did not meet seismic Zone 2 requirements.

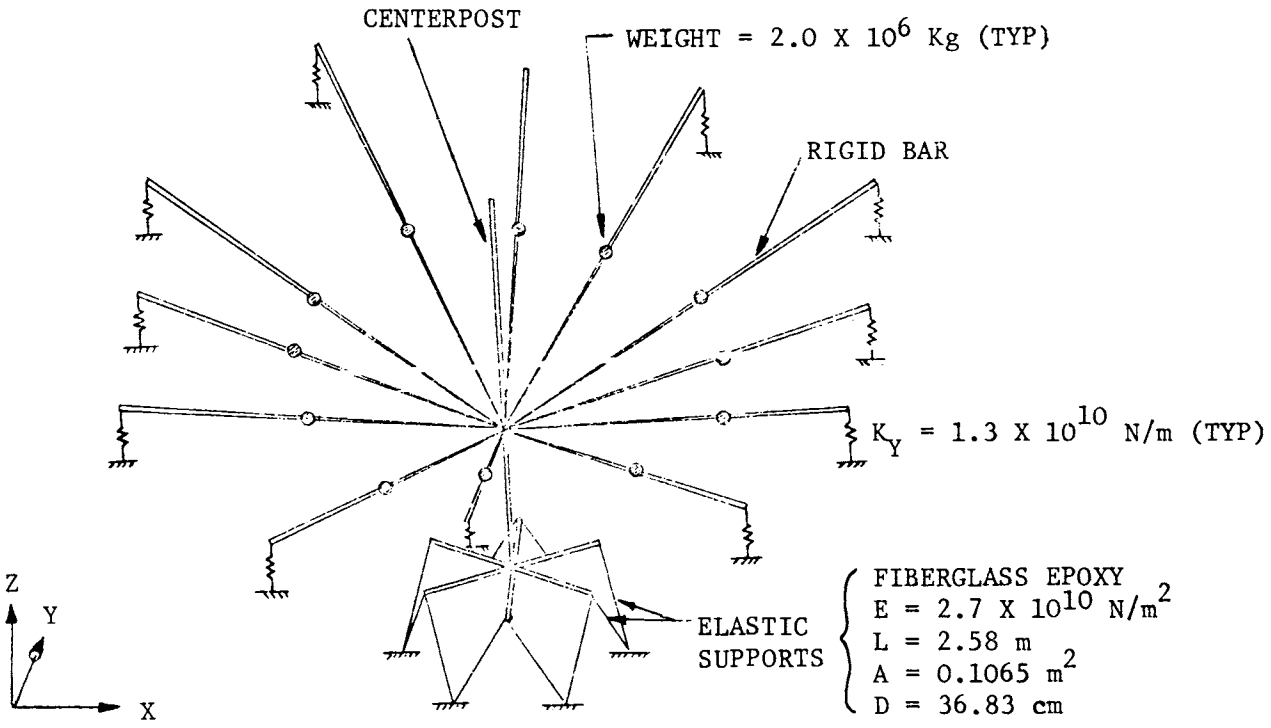

Figure D-14. STARFIRE TF coil system dynamic response model.

Investigation of modal participation factors indicated that the 2.91 Hz first mode response was predominant, contributing 98% of the total response. Since this mode was primarily a function of centerpost support flexibility, modification of the strut design was a viable means of decreasing excessive deflections and increasing the buckling stiffness of the members. Two options which had been considered during the STARFIRE design process--increasing strut cross section and changing from fiberglass to stainless steel struts--are shown in Table D-5 to be effective in reducing seismic Zone 2 TF coil response.

Table D-5. Effect of Centerpost Support Strut Properties On TF Coil Modal/Seismic Response Results

Strut Description	Fundamental System Frequency (Hz)	Maximum Horizontal Coil Deflection (cm)
Baseline Design (Dia. = 36.8 cm)	2.91	±7.95
Double cross sectional area (Dia. = 52.1 cm)	3.91	±4.32
Four times cross sectional area (Dia. = 73.7 cm)	5.0	±2.39
Stainless Steel Strut (Dia. = 36.8 cm)	6.31	±1.75

D.4.4 Analysis Limitations

Several simplifying assumptions were made in this analysis, the most significant of which were the following:

1. Torsional motion of the reactor about the vertical was not considered since the current level of design definition does not allow for accurate estimation of eccentricity.
2. The floor response spectrum analysis technique did not allow for dynamic coupling effects between the floor-supported structure and the floor/foundation/soil. This is a preliminary analysis technique which permits low-cost estimates of subsystem seismic response.
3. The elastic spring soil representation is a commonly used design technique which ignores a number of important soil parameters such as physical structure, porosity, density, moisture content, stress history, geologic features, etc. Analysis of a reactor for usage in many geographical areas justified such a simplified soil idealization for preliminary design work.

These assumptions were necessary during conceptual design phase analyses. Their impact is unknown and should be evaluated by results of more detailed dynamic analyses as the design process continues.

D.5 CONCLUSIONS

The following conclusions are based on the results presented, which are applicable to the STARFIRE cryogenic or "cold" structure design.

a) Vertical seismic Zone 2 deflection response of the baseline TF coil system was insignificant ($\pm$0.4 cm).

b) Horizontal seismic Zone 2 deflection response of the baseline TF coil system was excessive ($\pm$7.95 cm).

c) Horizontal seismic response resulted primarily from a flexible centerpost support system consisting of fiberglass struts. The baseline struts were structurally inadequate to meet seismic Zone 2 requirements.

d) Minor detail design modification of the centerpost support struts was an effective means of reducing seismic response to acceptable levels.

The analysis presented in this appendix indicated that preliminary seismic analyses can impact detail design. The need for consideration of seismic effects in the conceptual design of fusion reactors is therefore evident. As the STARFIRE design evolves, more complex and accurate dynamic analyses should be performed to evaluate previous conclusions and to assure that the design meets requirements selected as guidelines, during initial stages of reactor development.

References

1. Uniform Building Code, International Conference of Building Officials, Whittier, California, 1973.

2. "Recommended Lateral Force Requirements and Commentary," Seismology Committee, Structural Engineers Association of California, San Francisco, California, 1973.

3. The National Building Code, American Insurance Association Engineering and Safety Service, New York, N.Y., 1976.

4. J. A. Martore, "Seismic Analysis and Design of Nuclear Power Plants," U.S. Nuclear Regulatory Commission Engineering Branch, June, 1979. (Prepared for MDAC-St. Louis.)

5. J. Holdren, "Safety and Environmental Aspects of Fusion Reactors," Lawrence Livermore Laboratory, Preprint VCRL-7859, October 1976.

6. Standard Review Plan, NUREG-75/087, U.S. NRC Office of Nuclear Reactor Regulation, 1975.

7. "Seismic Requirements for Design of Nuclear Power Plants and Test Facilities," RDT Standard F9-2T, Division of Reactor Research and Development, U.S.A.E.C., January, 1974.

8. "Design Response Spectra for Seismic Design of Nuclear Power Plants," NRC Regulatory Guide 1.60, Revision 1, December, 1973.

9. G. V. Sheffield, J. T. Giarrusso, H. Wepler, "The General Requirements Sections of the TFTR System Descriptions," Plasma Physics Laboratory, Princeton University, Princeton, N.J., December, 1977.

10. C. M. Harris, C. E. Crede, Shock and Vibration Handbook, Vol. 3, Ch. 50, McGraw-Hill, 1961.

11. "Damping Values for Seismic Design of Nuclear Power Plants," NRC Regulatory Guide 1.61, October, 1973.

12. "GA TNS Project - Status Report for FY-78," Vol. V, GA-A15100, General Atomic Co., October 1978.

13. ICES STRUDL Users Manual, McDonnell Douglas Automation Company, Appendix F, April 1980.

14. "Development of Floor Design Response Spectra for Seismic Design of Floor-supported Equipment or Components," NRC Regulatory Guide 1.122, Revision 1, February, 1978.

Table of Contents

	Page
E.1 STRUCTURAL MATERIALS	E-1
E.1.1 Composition	E-1
E.1.2 Thermophysical Properties	E-1
E.1.3 Mechanical Properties	E-1
E.1.4 Swelling	E-8
E.2 NEUTRON MULTIPLIERS	E-8
E.3 LOW-Z COATINGS	E-8
E.3.1 Sputtering Model	E-8
E.3.2 Beryllium Vapor Pressure	E-15
E.4 BREEDER MATERIALS	E-16
E.4.1 Diffusion Controlled Inventory	E-16
E.4.2 Percolation of Tritium Through Interconnected Porosity	E-18
E.4.3 Thermochemical Data	E-23
E.4.4 Preparation and Fabrication	E-27
E.5 WATER COOLANT CORROSION	E-32
E.5.1 Rate Constants	E-32
References	E-33

List of Figures

Number		Page
E-1	Thermophysical properties of structural materials. (a) thermal expansion, (b) thermal conductivity, (c) specific heat, and (d) modulus of elasticity	E-3, E-4
E-2	Tensile strength structural materials. (a)-(b), 0.2% yield strength, and (c)-(d), ultimate tensile strength	E-5, E-6
E-3	100,000 h creep-rupture strength of selected structural materials	E-7
E-4	Fatigue life of 20% CW Type 316 stainless steel irradiated in HIFR at 430°C and tested at irradiation temperature (200-1000 appm He, 5-15 dpa)	E-7
E-5	Thermophysical properties of neutron multiplier materials. (a) thermal expansion, (b) thermal conductivity, and (c) specific heat	E-9, E-10
E-6	Calculated energy-dependent physical sputtering yields for deuterium on candidate first-wall materials	E-11
E-7	Calculated energy-dependent physical sputtering yield for helium on candidate first wall materials	E-12
E-8	Plot of calculated energy-dependent sputtering yield curves for iron (stainless steel) showing comparison with experimental data (Refs. 14-21 in Ref. 19 plus recent data of Bohdansky, et al. in Ref. 23)	E-12
E-9	Plot of calculated energy-dependent physical sputtering yield curves for molybdenum showing comparison with experimental data[19,23,24]	E-13
E-10	Plot of calculated energy dependent physical sputtering yield curves for carbon showing comparison with experimental data.[19,23]	E-13
E-11	Plot of calculated energy-dependent physical sputtering yield curves for SiC showing comparison with experimental data for Bohdansky.[23]	E-14
E-12	Plot of calculated energy-dependent physical sputtering yield curves for B_4C showing comparison with experimental data of Bohdansky.[23]	E-14
E-13	Variation of Be evaporization rate with temperature. Horizontal lines indicate Be loss in terms of mm/yr. Lower scale shows the thickness of Be on the leading edge of limiter required for the surface to reach the temperature indicated	E-15

List of Tables

Number		Page
E-1	Nominal Composition of Structural Materials (weight %) . .	E-2
E-2	Calculated Diffusive Tritium Inventory in STARFIRE	E-17
E-3	Diffusion Controlled Tritium Inventories	E-18
E-4	Average Equilibrium Concentration, c (wt. %) and Peak Partial Pressure, p^P (Pa) of T_2O and the Elevation of Total Pressure p (Pa) for Three Values of Central Temperatures, T_i (°C). Calculations done for STARFIRE Base Case.	E-21
E-5	Thermochemical Data For: $2\ LiOH \rightleftarrows Li_2O + H_2O$	E-24
E-6	Thermochemical Data For: $2\ LiOH + Al_2O_3 \rightleftarrows 2\ LiAlO_2 + H_2O$.	E-24
E-7	Thermochemical Data For: $2\ LiOH + SiO_2 \rightleftarrows Li_2SiO_3 + H_2O$	E-25
E-8	Thermochemical Data For: $2\ LiOH + TiO_2 \rightleftarrows Li_2TiO_3 + H_2O$	E-25
E-9	Thermochemical Data for: $2\ LiOH + ZrO_2 \rightleftarrows Li_2ZrO_3 + H_2O$	E-26
E-10	Steady State Corrosion and Release Rates	E-31

Additional materials properties and calculations are presented. The data and calculations are divided into sections corresponding to their uses in the reactor.

E.1 STRUCTURAL MATERIALS

E.1.1 Composition

The compositions of the structural materials are presented in Table E-1.[1-6]

E.1.2 Thermophysical Properties

The thermophysical properties of potential structural materials as a function of temperature are shown in Fig. E-1.[1-4,6,7] These property values have been used to estimate the temperature and stress gradients in the first wall and limiter. The values used for PCA are those of Type 316 stainless steel.

E.1.3 Mechanical Properties

The values of the yield strengths and ultimate tensile strengths of potential structural materials as a function of temperature, are shown in Fig. E-2.[1-4,6,8,9] The 100,000 h creep rupture strengths of several structural materials, as a function of temperature, are shown in Fig. E-3.[1-3, 10] The mechanical strength of PCA has been assumed to be the same as 20% cold-worked Type 316 stainless steel. The mechanical property data have been used to determine allowable stress values.

The effect of irradiation and high helium concentrations on the fatigue properties of 20% cold-worked Type 316 stainless steel is shown in Fig. E-4.[11] The fatigue lifetimes are reduced at high strain ranges, but they are not significantly effected at low strain ranges. The crack growth rate, da/dn, in 20% cold-worked Type 316 stainless steel has been estimated using the data of James and Sadanda,[12,13] and is given by

$$da/dn \text{ (m/cycle)} = \left(\frac{346\ \Delta K_{eff}}{E}\right)^5 f^{0.447} \qquad \text{(E-1)}$$

and

$$\Delta K_{eff} = K_{max}\ [1-R]^{0.6} \qquad \text{(E-2)}$$

Table E-1. Nominal Composition of Structural Materials (weight %)

Alloy	B	C	N	O	Al	Si	P	S	Ti	V	Cr	Mn	Mg	Fe	Co	Ni	Cu	As	Zr	Nb	Mo	Ta	W
PCA	0.001	0.05	0.01		0.03	0.5	0.01	0.005	0.3	0.04	14.0	1.8		64.68	0.03	16.0	0.02	0.02	0.02	0.03	2.0	0.01	
316 SS		0.06	0.007			0.46	0.03	0.01	0.04		16.7	1.43		64.44	0.03	13.9	0.06				2.84		
Ti-6242		0.01	0.008	0.06	6.0	0.01			85.84		0.01	0.002		0.02		0.005	0.01		4.0		2.0		
INCO-718		0.04			0.5	0.18			0.9		19.0	0.18		18.6		52.5				5.1	3.0		
HT-9		0.20				0.4	0.02	0.02		0.3	11.5	0.55				0.5					1.0		0.5
FS-85		0.01	0.01	0.02															0.8	62.2		27.0	10.0
TZM		0.01		0.005					0.5					0.02		0.01			0.08		99.4		
Ta-5W		0.02	0.01	0.005										0.01						0.10		94.8	5.0
AMAX-MZC											0.40		0.05				99.4		0.15				
W		0.01	0.01	0.01										0.03							0.04		99.9
V-20Ti		0.02	0.05	0.05	0.004	0.03	0.01		20.0	79.79				0.01							0.008	0.003	0.01

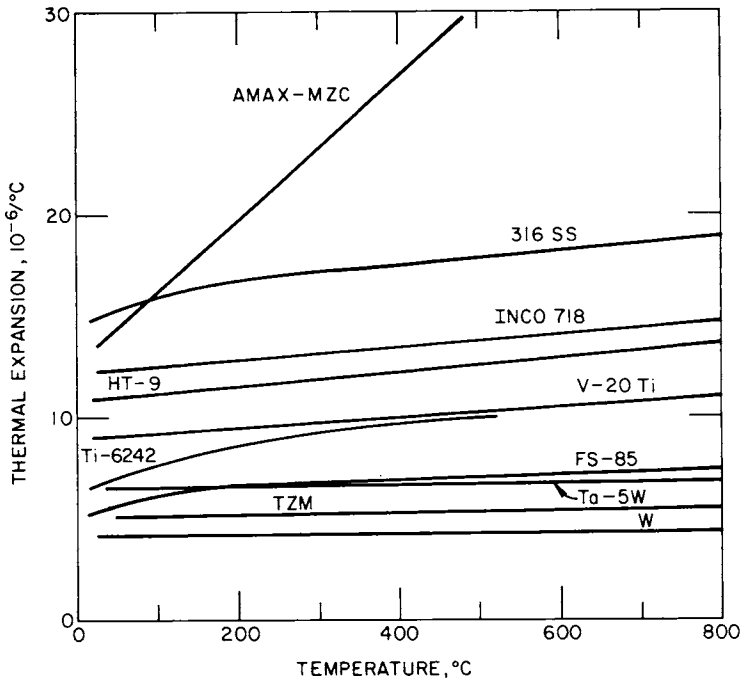

(a)

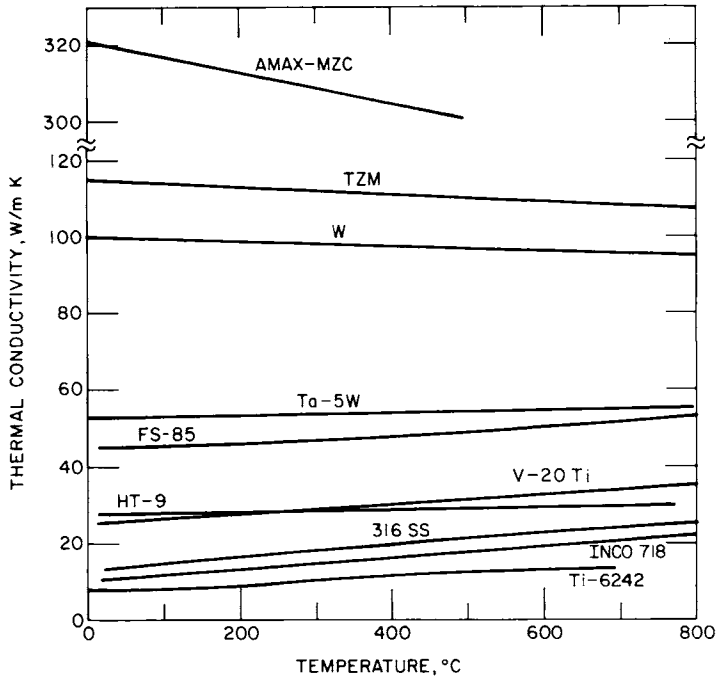

(b)

Figure E-1. Thermophysical properties of structural materials. (a) thermal expansion, (b) thermal conductivity, (c) specific heat, and (d) modulus of elasticity.

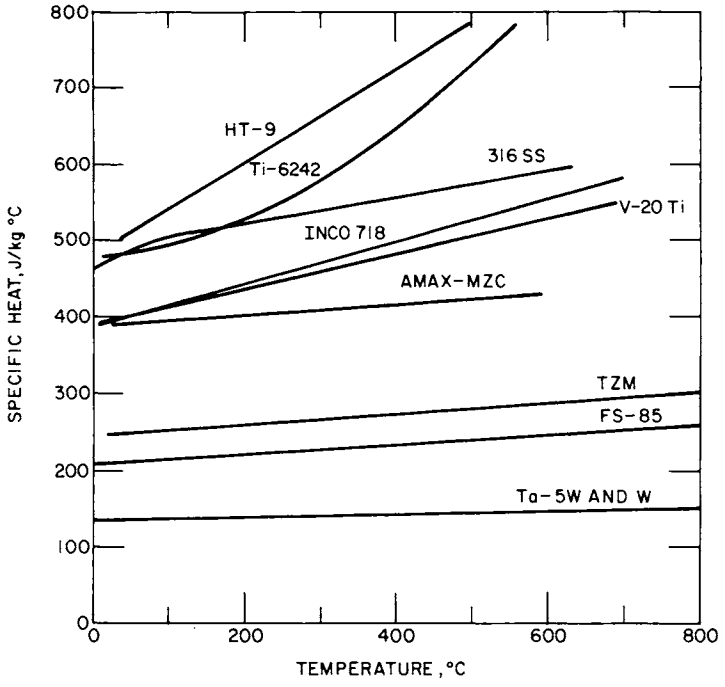

(c)

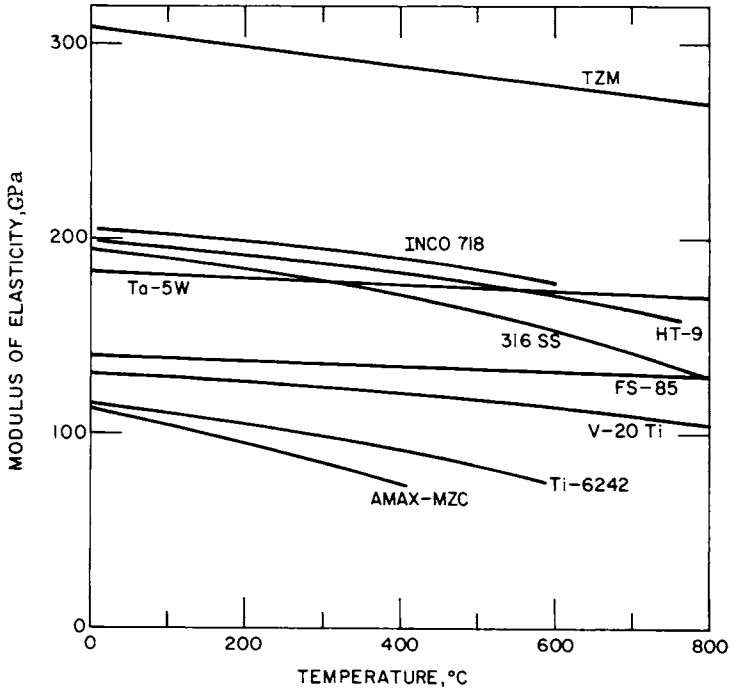

(d)

Figure E-1. Thermophysical properties of structural materials. (a) thermal expansion, (b) thermal conductivity, (c) specific heat, and (d) modulus of elasticity. (continued)

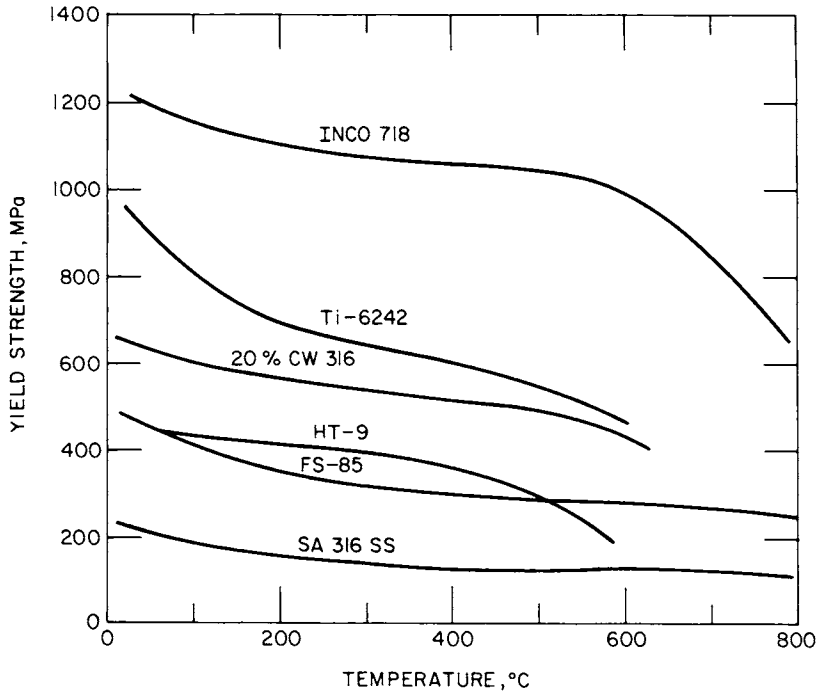

(a)

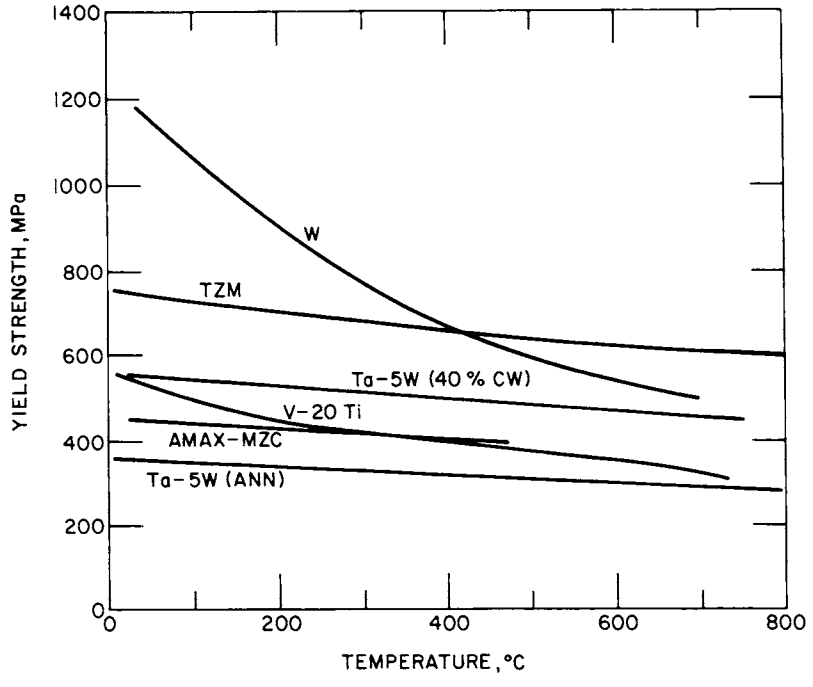

(b)

Figure E-2. Tensile strength of structural materials. (a)-(b), 0.2% yield strength, and (c)-(d), ultimate tensile strength.

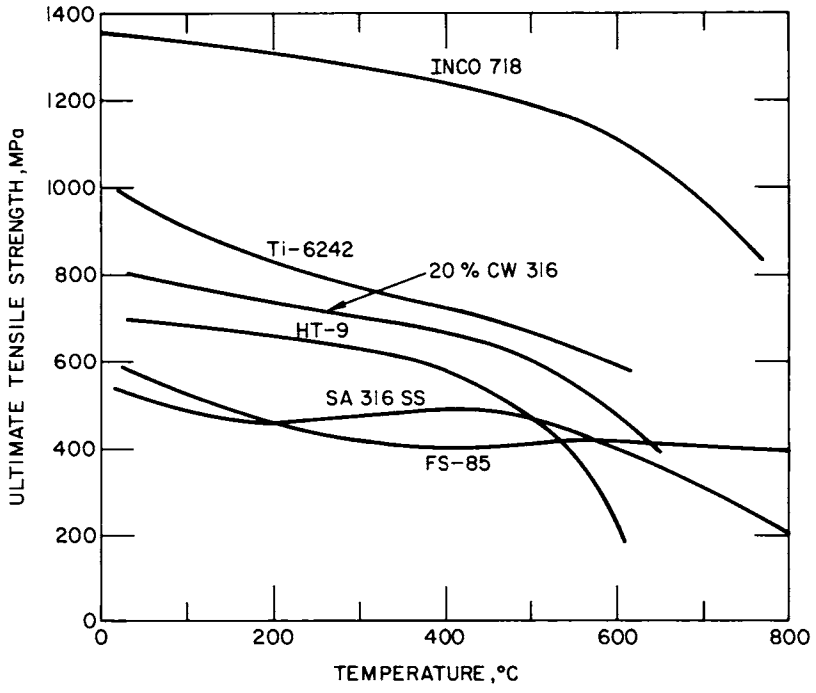

(c)

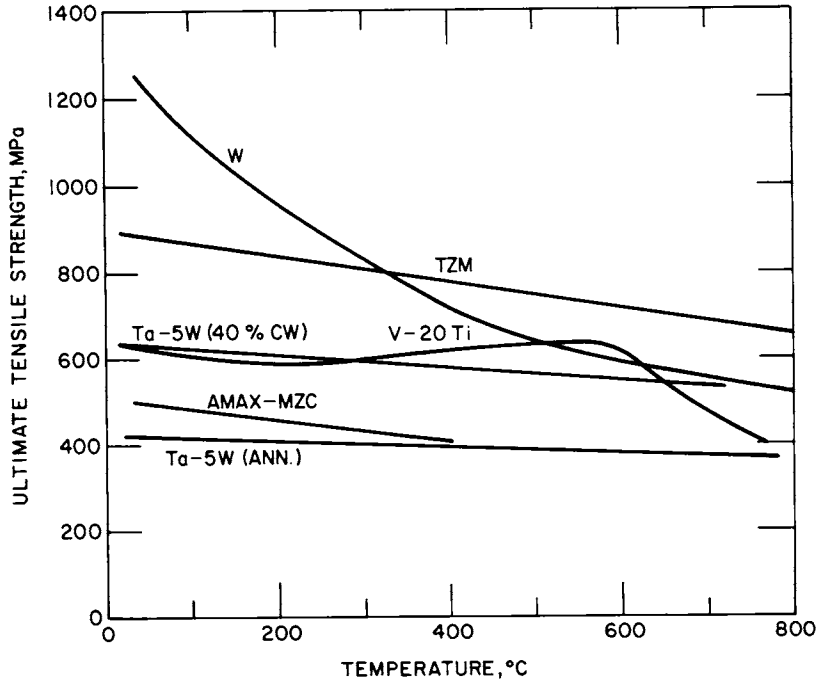

(d)

Figure E-2. Tensile strength of structural materials. (a)-(b), 0.2% yield strength, and (c)-(d), ultimate tensile strength. (continued)

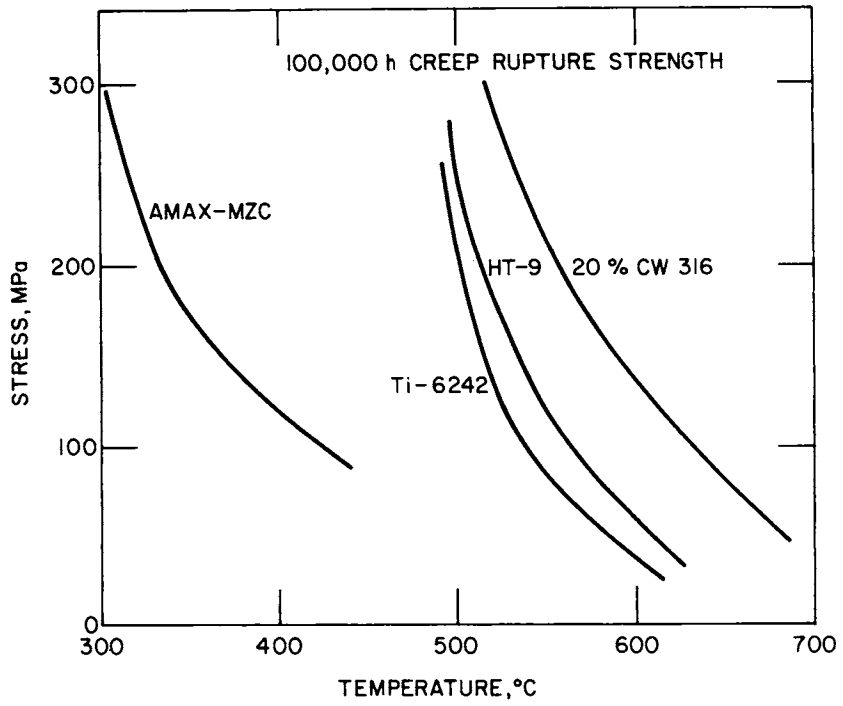

Figure E-3. 100,000 h creep-rupture strength of selected structural materials.

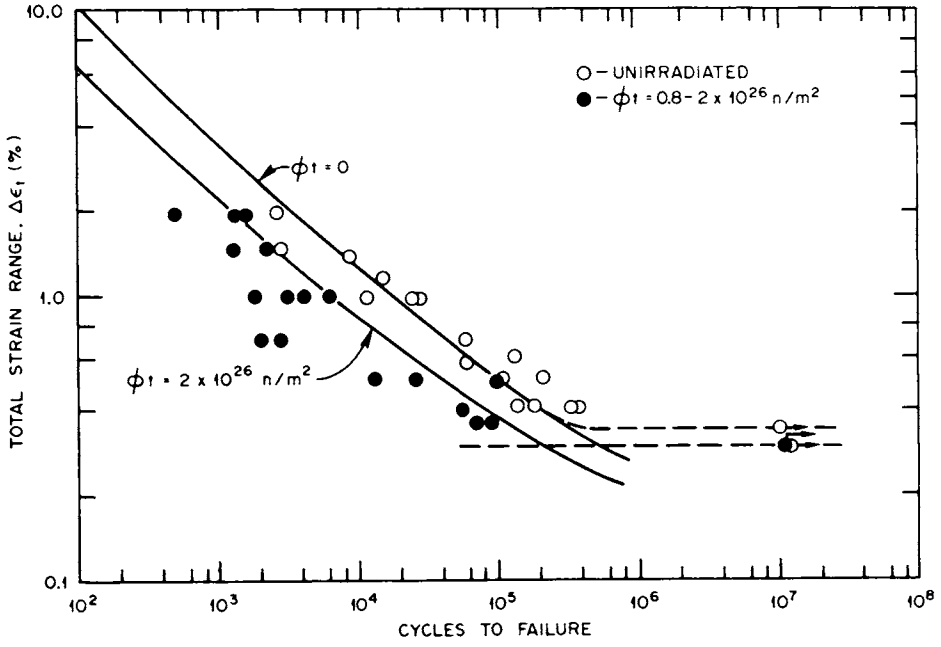

Figure E-4. Fatigue life of 20% CW Type 316 stainless steel irradiated in HIFR at 430°C and tested at irradiation temperature (200-1000 appm He, 5-15 dpa).

where E is Young's modulus, f is the frequency in cycles/min, K_{max} is the maximum stress intensity, and R is the stress ratio defined as the minimum stress/maximum stress during the operating cycle.

E.1.4 Swelling

The available fission reactor swelling rates for HT-9 and 20% cold-worked Type 316 stainless steel have been used to calculate the swelling. The swelling in PCA has been assumed to be one-tenth that of 20% cold worked Type 316 stainless steel.[9] The effect of the additional helium production has been taken into account by using a simple model of gas driven swelling. For temperatures less than 600°C, the gas driven swelling is estimated to be described by

$$\frac{\Delta V}{V}\ (\%) = 1.3 \times 10^{-5}\ (C_{He}\ (\text{appm}))^{1.5} \qquad \text{(E-3)}$$

for both HT-9 and PCA.[14] The total swelling is then the greater of void swelling or gas driven swelling. The effect of gas driven swelling is to produce swelling at temperatures outside the normally observed fission reactor swelling range and to eliminate the swelling incubation period.

E.2 NEUTRON MULTIPLIERS

The thermophysical properties of potential neutron multiplier materials are shown in Fig. E-5.[15-18] Note that the properties of Zr_5Pb_3 are estimated only.

E.3 LOW-Z COATINGS

E.3.1 Sputtering Model

Smith[19,20] has developed a model that gives the energy-dependent physical sputtering yields for various plasma particles incident on candidate first-wall material. The expression for the physical sputtering yield, which is based on both theoretical and experimental considerations, is given in terms of the atomic and mass numbers of the incident and target atoms, the surface binding energy of the target material and the energy of the incident particle. The general shapes of the sputtering yield curves are based on theoretical models, whereas the magnitudes of the yields are derived primarily from experimental data. Characteristics of the original sputter-yield curves[19] include: (a) a

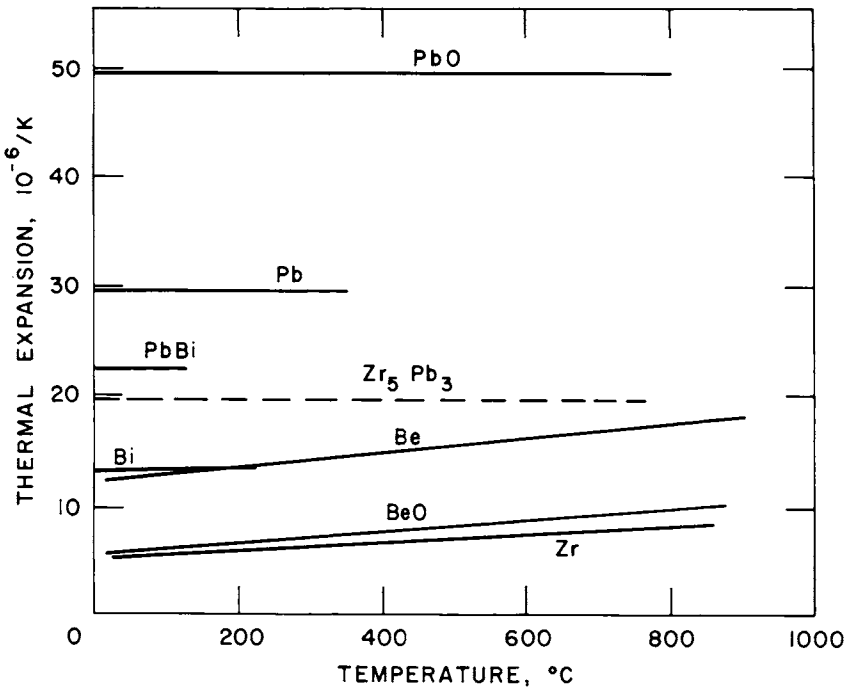

(a)

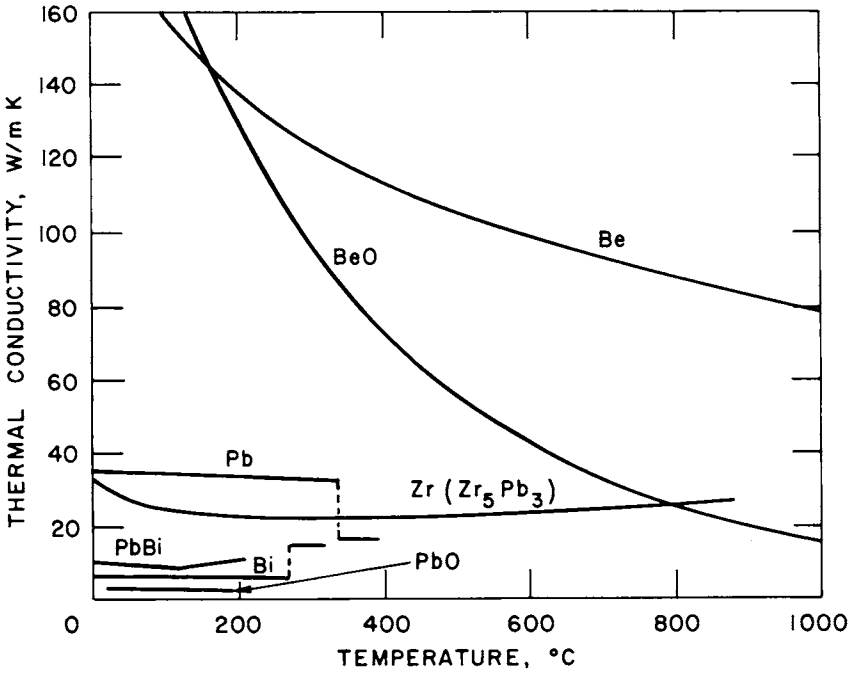

(b)

Figure E-5. Thermophysical properties of neutron multiplier materials. (a) thermal expansion, (b) thermal conductivity, and (c) specific heat.

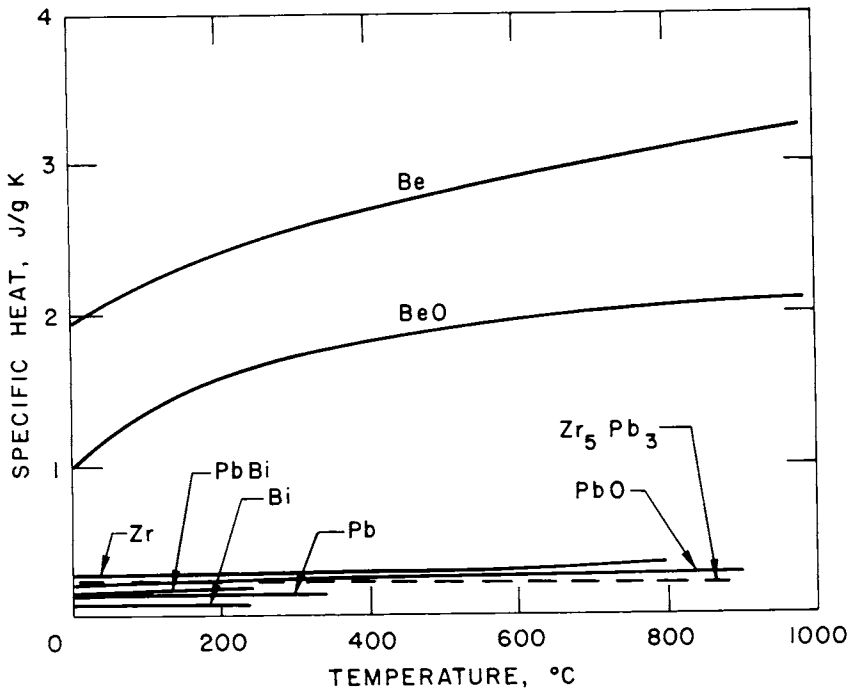

(c)

Figure E-5. Thermophysical properties of neutron multiplier materials. (a) thermal expansion, (b) thermal conductivity, and (c) specific heat. (continued)

direct energy dependence at low incident particle energy, (b) a 1/E dependence at high incident particle energies, and (c) a peak at intermediate energies where the yield is relatively insensitive to energy. The recent modification[20] incorporates a threshold energy term into the expression to give an asymptotic approach to zero sputtering at the threshold rather than the abrupt cutoff originally presented. The modified sputtering yield is given by

$$S(E) = \frac{20}{U_o} Z_1^2 Z_2^2 \frac{M_1}{M_2} \frac{(E-E_{th})}{(E-E_{th} + 50\ Z_1 Z_2)^2} \tag{E-4}$$

where

$$E_{th} = \frac{(M_1 + M_2)^2}{4M_1M_2} U_o \text{ for } M_1 \leq M_2 \tag{E-5}$$

$$E_{th} = \frac{M_2}{M_1} U_o \text{ for } M_1 > M_2 \tag{E-6}$$

and where U_o is the surface binding energy, Z_1, Z_2 and M_1, M_2 are the atomic numbers and mass numbers of the incident particles and target atoms, respectively.

Predicted sputtering yields from this model are shown in Figs. E-6 to E-10 with available experimental data. Fairly good agreement with experiments has been obtained for several candidate wall materials.

Although this model was developed for metal wall materials, it has been extended to certain stable compounds. The agreement with recent data for SiC and B_4C given in Figs. E-11 and E-12 is surprisingly good, particularly with respect to the shape of the curve.

The angular dependence of the sputtering yield has received less attention. Winters[21] has presented a review of physical sputtering that summarizes the work on the effect of the incident angle on the sputtering yield. The cosine dependence gives a fairly good approximation of some of the data for angles up to 70 degrees from the normal. Calculations based on Sigmund's theory give a fairly good approximation to experimental data for argon ions to angles of 70 degrees.[22] Data with which to compare calculated values for light ions are rather sparse. Further work on light ions and low angles of incidence (> 70 degrees from the normal) are needed. Although effects of surface condition have received some attention by experimentalists, limited effort has been expended on theoretical considerations.

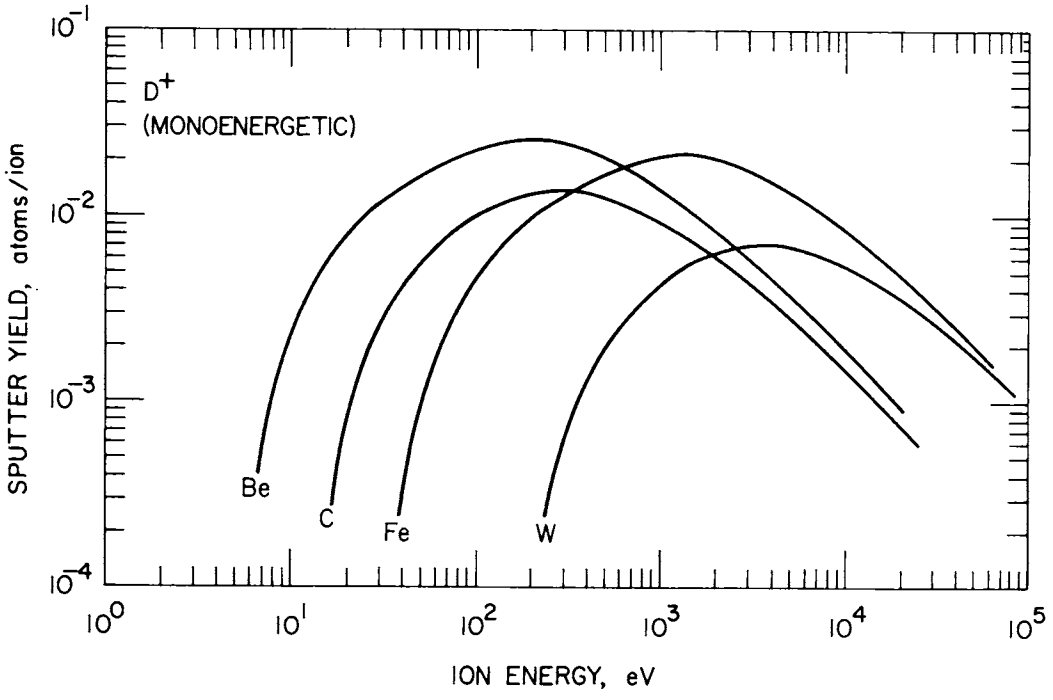

Figure E-6. Calculated energy-dependent physical sputtering yields for deuterium on candidate first-wall materials.

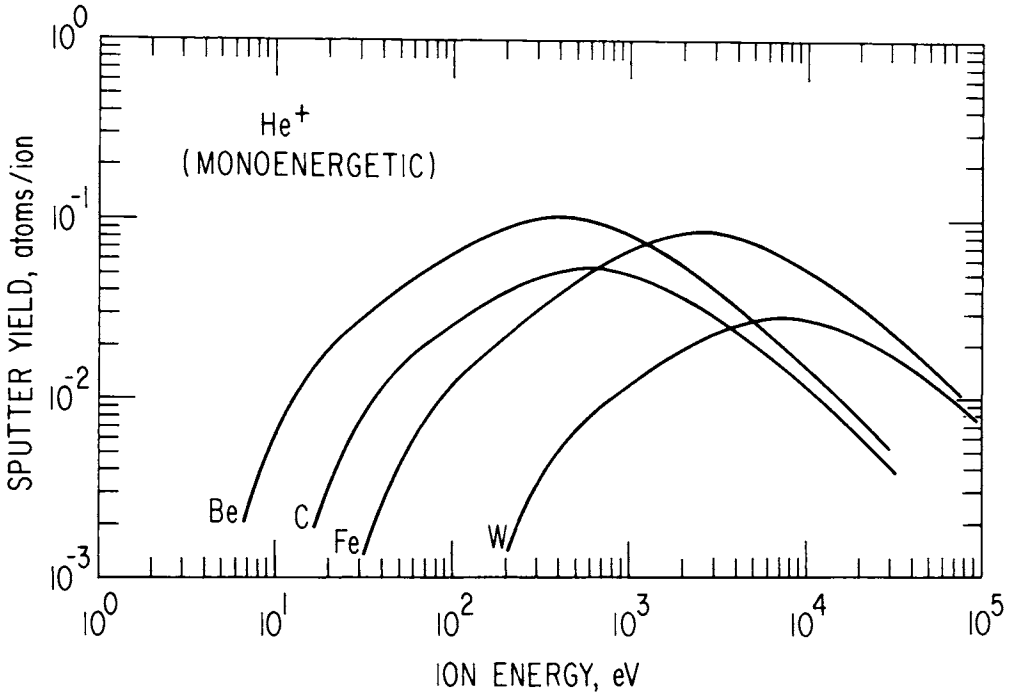

Figure E-7. Calculated energy-dependent physical sputtering yield for helium on candidate first wall materials.

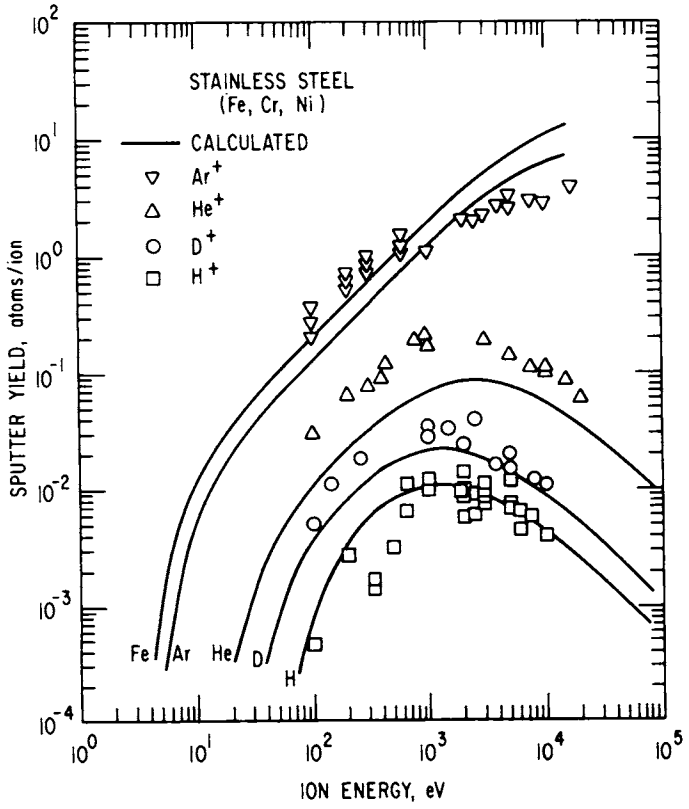

Figure E-8. Plot of calculated energy-dependent sputtering yield curves for iron (stainless steel) showing comparison with experimental data (Refs. 14-21 in Ref. 19 plus recent data of Bohdansky, et al. in Ref. 23).

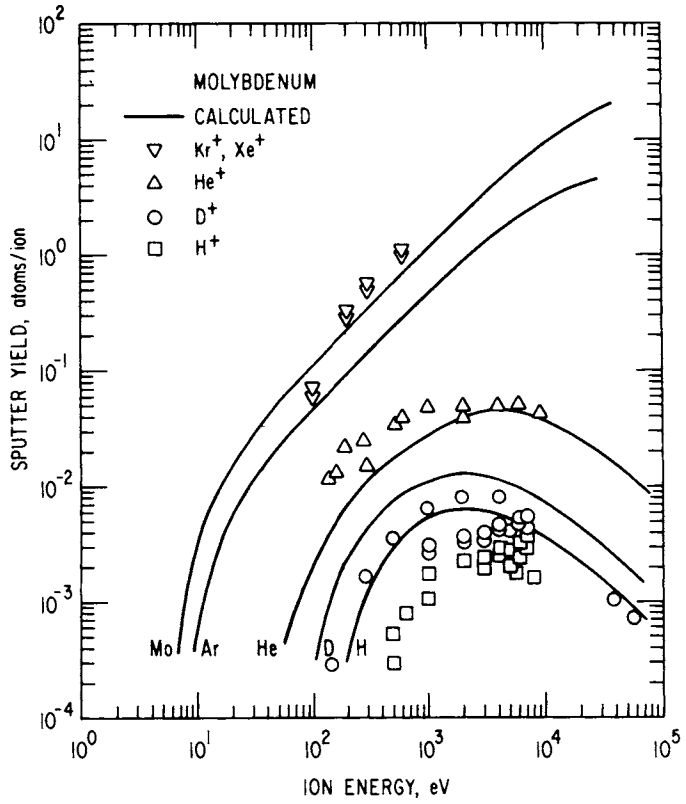

Figure E-9. Plot of calculated energy-dependent physical sputtering yield curves for molybdenum showing comparison with experimental data.[19,23,24]

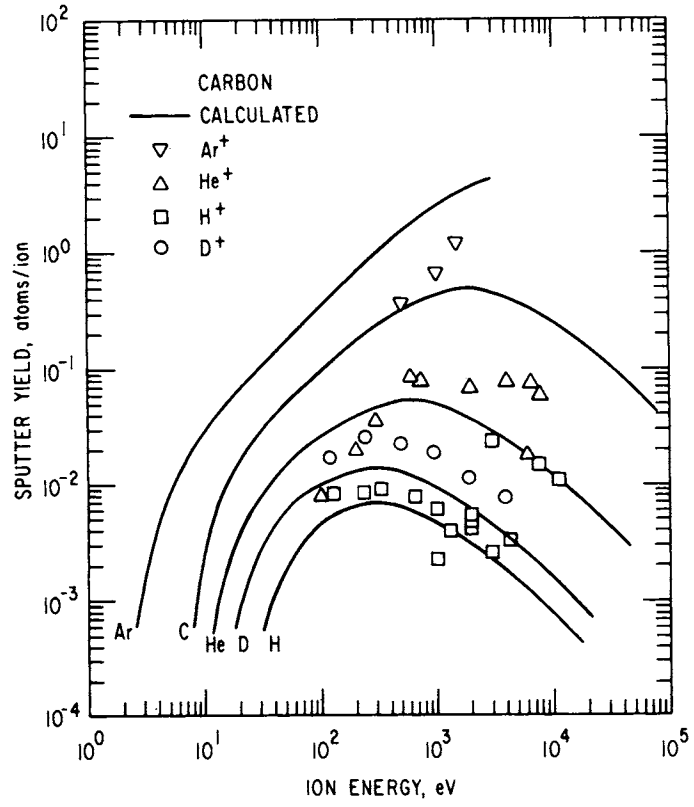

Figure E-10. Plot of calculated energy dependent physical sputtering yield curves for carbon showing comparison with experimental data.[19,23]

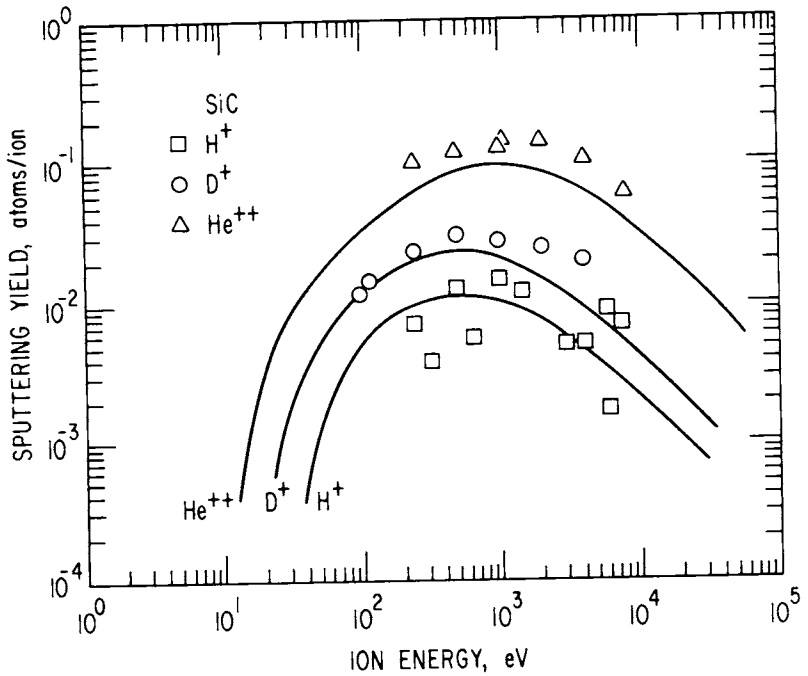

Figure E-11. Plot of calculated energy-dependent physical sputtering yield curves for SiC showing comparison with experimental data of Bohdansky.[23]

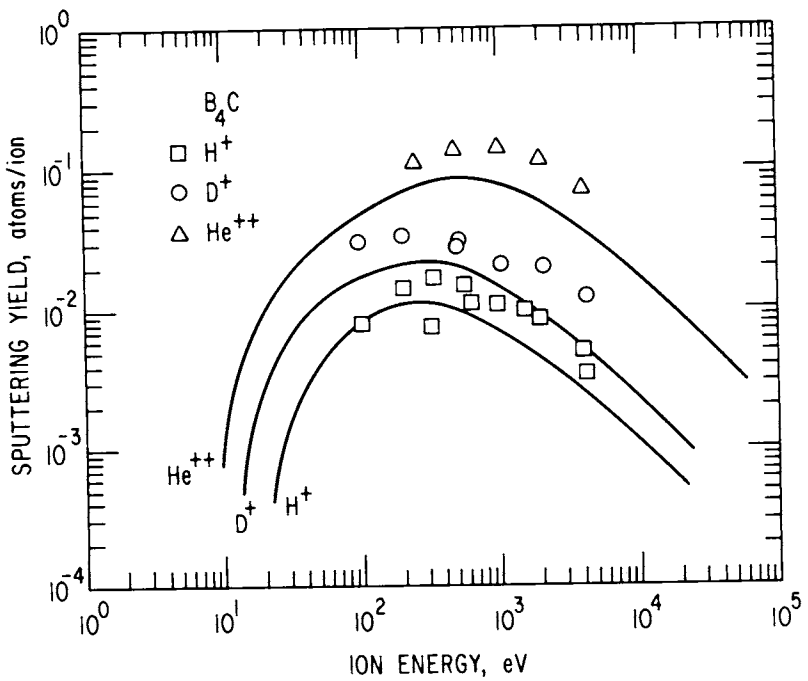

Figure E-12. Plot of calculated energy-dependent physical sputtering yield curves for B_4C showing comparison with experimental data of Bohdansky.[23]

E.3.2 Beryllium Vapor Pressure

Thermal vaporization can cause the loss of Be atoms from the surface of the coating on the first wall and limiter. The flux of Be atoms leaving the surface, ϕ_{Be}, can be related to the vapor pressure, P_v, by

$$\phi_{Be} = \frac{P_v}{(2\pi mkT)^{\frac{1}{2}}} \tag{E-7}$$

where m is the mass of the Be atom, k is Boltzman's constant, and T is the absolute temperature.[25] It has been implicitly assumed in Eq. (E-7) that all vaporized atoms are either swept into the plasma or into the vacuum system so that no re-deposition occurs. The values for the variation in vapor pressure with temperature have been taken from Ref. 15.

The results of the calculations, shown in Fig. E-13, indicate that vaporization should not be significant at surface temperatures $\lesssim$ 1100 K. Above this

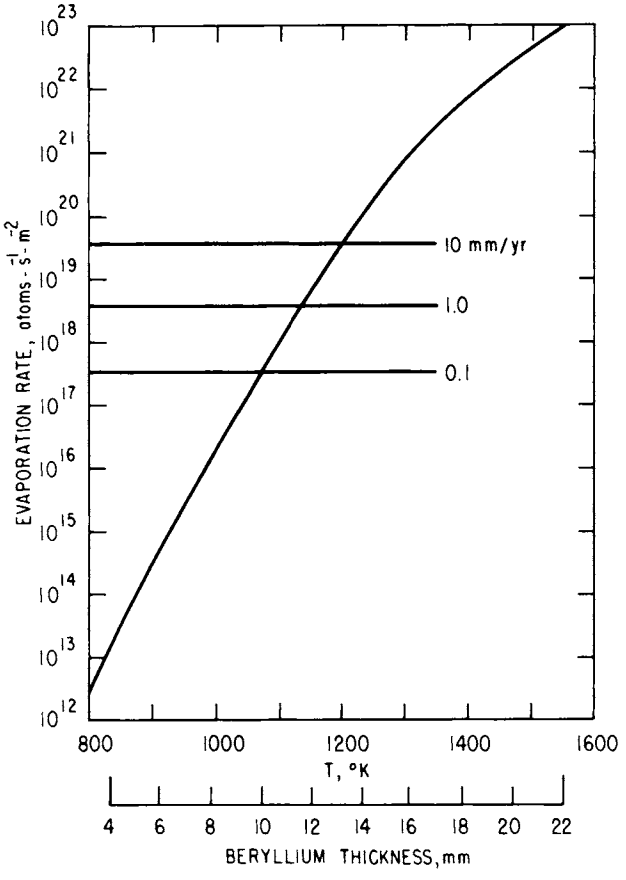

Figure E-13. Variation of Be evaporization rate with temperature. Horizontal lines indicate Be loss in terms of mm/yr. Lower scale shows the thickness of Be on the leading edge of limiter required for the surface to reach the temperature indicated.

point, vaporization quickly becomes significant, with a vaporization rate of 1 mm/yr at 1130 K and a rate of 10 mm/yr at 1210 K. In the case of the leading edge of the limiter, which receives a surface heat flux of 4 MW/m^2, the thickness of Be required to reach a surface temperature of 1000 K is 8.3 mm. Since the Be thickness is not expected to reach this level, the loss of Be by thermal vaporization is not expected to be significant during normal operation.

E.4 BREEDER MATERIALS

E.4.1 Diffusion Controlled Inventory

The diffusion controlled inventory model gives the tritium inventory corresponding to the concentration gradients within individual grains. The model is based upon the assumptions that the grains are individual spheres $\sim$ 1 μm in diameter and that the concentration of tritium at each grain surface is zero. Since these assumptions are not realistic, the calculated tritium inventory is expected to be lower than the true inventory. The methodology for the model calculations is discussed in Sec. 10.3.1.1 and 10.3.2.1.

Inventory calculations have been made for several sets of conditions, designated cases TR1 through TR4. The temperatures used in the calculations are based upon the results of thermal-hydraulic analysis, detailed in Sec. 10.5. The blanket was divided into 100 equal volume sections, and the inventory for each section was then calculated for the temperature in that section. The maximum allowable temperature in the breeder material was 850°C in each case. The diffusion rates used are those of hydrogen in Al_2O_3. The parameters which were varied in the calculations are the relative flux (PWF), the gap conductance between the breeder and the coolant tube (HG), and the coolant tube diameter. A PWF of 1.0 refers to the neutron flux seen by the breeder just behind the neutron multiplier. The values used for the gap conductance are 1600 BTU/h ft^2R (0.91 W/cm^2 K) and 800 BTU/hr ft^2R (0.455 W/cm^2 K). The values used for the coolant tube diameter are 1.0 cm and 0.635 cm.

The results of the calculations are presented in Table E-2 for the STARFIRE reference case TR2 and in Table E-3 which summarizes all four cases. The five columns of Table E-2 are the (1) breeder temperature of each region, (2) amount of tritium in each region, (3) cumulative percent of tritium inventory, (4) percent of tritium in each region, and (5) cumulative tritium inventory. The calculations indicate that most of the tritium is tied up

Table E-2. Calculated Diffusive Tritium Inventory in STARFIRE

PWF=1.00, HG=1600, TUBE I.D.=1.00 CM DSN=TR2 REFERENCE CASE

TOTAL DIFFUSIVE TRITIUM INVENTORY= 141.22 G

T/DEG C	TRITIUM/G	CUM % T	% T INV.	CUM T INV
508.44	27.11	19.197	19.197	27.11
512.07	22.631	35.223	16.026	49.741
515.71	18.924	48.623	13.4	68.665
519.35	15.85	59.846	11.223	84.514
522.98	13.296	69.262	09.4154	97.81
526.62	11.172	77.173	07.9113	108.98
530.25	9.4023	83.831	06.658	118.38
533.89	7.9251	89.443	05.6119	126.31
537.53	6.6902	94.181	04.7375	133
541.16	5.6563	98.186	04.0053	138.66
603.54	.3946	98.465	00.27943	139.05
607.17	.34182	98.707	00.24205	139.39
610.81	.29645	98.917	00.20992	139.69
614.45	.2574	99.1	00.18227	139.95
618.08	.22375	99.258	00.15844	140.17
621.72	.19472	99.396	00.13789	140.37
625.35	.16965	99.516	00.12014	140.53
628.99	.14797	99.621	00.10478	140.68
632.63	.12921	99.712	9.1495E-2	140.81
636.26	.11294	99.792	7.9978E-2	140.93
670.24	.033789	99.816	2.3927E-2	140.96
673.87	.029847	99.837	2.1135E-2	140.99
677.51	.02639	99.856	1.8688E-2	141.02
681.15	.023356	99.873	1.6539E-2	141.04
684.78	.020689	99.887	1.4651E-2	141.06
688.42	.018344	99.9	1.299E-2	141.08
692.05	.01628	99.912	1.1528E-2	141.09
695.69	.01446	99.922	1.024E-2	141.11
699.33	.012856	99.931	9.1035E-3	141.12
702.96	.011439	99.939	8.1005E-3	141.13
718.24	.0070717	99.944	5.0076E-3	141.14
721.87	.0063203	99.949	4.4755E-3	141.15
725.51	.0056533	99.953	4.0032E-3	141.15
729.15	.0050608	99.956	3.5837E-3	141.16
732.78	.0045341	99.959	3.2107E-3	141.16
736.42	.0040654	99.962	2.8788E-3	141.17
740.05	.003648	99.965	2.5832E-3	141.17
743.69	.003276	99.967	2.3198E-3	141.17
747.33	.0029442	99.969	2.0848E-3	141.18
750.96	.002648	99.971	1.8751E-3	141.18
752.84	.002508	99.973	1.776E-3	141.18
756.47	.0022582	99.975	1.5991E-3	141.18
760.11	.0020348	99.976	1.4409E-3	141.18
763.75	.0018349	99.977	1.2993E-3	141.19
767.38	.0016558	99.978	1.1725E-3	141.19
771.02	.0014952	99.98	1.0588E-3	141.19
774.65	.0013512	99.98	9.5682E-4	141.19
777.64	.0012442	99.981	8.8102E-4	141.19
778.29	.0012219	99.982	8.6526E-4	141.19
781.27	.0011258	99.983	7.9717E-4	141.19
781.93	.0011057	99.984	7.8301E-4	141.2
784.91	.0010193	99.985	7.218E-4	141.2
785.56	.0010013	99.985	7.0906E-4	141.2
788.55	9.2356E-4	99.986	6.5399E-4	141.2
792.18	8.3737E-4	99.986	5.9296E-4	141.2
794.74	7.8198E-4	99.987	5.5374E-4	141.2
795.82	7.5972E-4	99.988	5.3798E-4	141.2
798.37	7.0981E-4	99.988	5.0263E-4	141.2
799.45	6.8974E-4	99.989	4.8842E-4	141.2
802.01	6.4471E-4	99.989	4.5654E-4	141.2
803.09	6.266E-4	99.989	4.4371E-4	141.2
805.65	5.8597E-4	99.99	4.1494E-4	141.2
805.74	5.8458E-4	99.99	4.1395E-4	141.2
806.73	5.6962E-4	99.991	4.0336E-4	141.21
809.28	5.3292E-4	99.991	3.7737E-4	141.21
809.37	5.3166E-4	99.991	3.7648E-4	141.21
810.36	5.1815E-4	99.992	3.6691E-4	141.21
811.84	4.9874E-4	99.992	3.5317E-4	141.21
812.92	4.8498E-4	99.993	3.4343E-4	141.21
813.01	4.8384E-4	99.993	3.4262E-4	141.21
813.64	4.7607E-4	99.993	3.3712E-4	141.21
815.47	4.5408E-4	99.994	3.2154E-4	141.21
816.55	4.4163E-4	99.994	3.1273E-4	141.21
816.65	4.406E-4	99.994	3.12E-4	141.21
817.27	4.3357E-4	99.994	3.0702E-4	141.21
819.11	4.1367E-4	99.995	2.9293E-4	141.21
820.19	4.0241E-4	99.995	2.8496E-4	141.21
820.28	4.0148E-4	99.995	2.843E-4	141.21
820.91	3.9511E-4	99.996	2.7979E-4	141.21
822.75	3.771E-4	99.996	2.6703E-4	141.21
823.83	3.669E-4	99.996	2.5981E-4	141.21
823.92	3.6605E-4	99.996	2.5921E-4	141.21
824.55	3.6029E-4	99.997	2.5513E-4	141.21
826.38	3.4396E-4	99.997	2.4357E-4	141.21
827.46	3.3472E-4	99.997	2.3702E-4	141.21
827.55	3.3396E-4	99.997	2.3648E-4	141.21
828.18	3.2873E-4	99.998	2.3278E-4	141.22
830.02	3.1393E-4	99.998	2.223E-4	141.22
831.19	3.0486E-4	99.998	2.1588E-4	141.22
831.82	3.0012E-4	99.998	2.1252E-4	141.22
833.65	2.867E-4	99.998	2.0302E-4	141.22
834.83	2.7846E-4	99.999	1.9719E-4	141.22
835.45	2.7416E-4	99.999	1.9414E-4	141.22
837.29	2.6198E-4	99.999	1.8551E-4	141.22
838.46	2.545E-4	99.999	1.8022E-4	141.22
839.09	2.506E-4	99.999	1.7745E-4	141.22
840.93	2.3953E-4	100.	1.6962E-4	141.22
842.73	2.2919E-4	100.	1.623E-4	141.22
844.56	2.1914E-4	100.	1.5518E-4	141.22
846.36	2.0974E-4	100.	1.4852E-4	141.22

Table E-3. Diffusion Controlled Tritium Inventories

Case	PWF	HG (W/cm^2 K)	Tube Diameter (cm)	Total Tritium (g)	Lowest Blanket Temperature (°C)
TR1	1.00	0.91	0.635	68.0	524
TR2	1.00	0.91	1.00	141.2	508
TR3	0.50	0.91	1.00	85.8	519
TR4	1.00	0.455	1.00	48.4	531

in the coldest regions of the blanket. For the STARFIRE reference case, 19% of the tritium is in the coldest 1% of the blanket and 98% of the tritium is in the coldest 10% of the blanket. Table E-3 shows that the total tritium inventory is related to the lowest temperature in the blanket, with the highest tritium inventory occurring in the blanket which operates at the lowest temperature.

E.4.2 Percolation of Tritium Through Interconnected Porosity

Tritium, released from the breeder as $T_2O(g)$, must pass through pores between breeder particles in order to get to the helium purge channels in the blanket. This section describes the details of the model which was used to evaluate the transport of tritium in the breeder. The model is based upon the POROUS code,[26] which was originally developed to model gas release in oxide fission fuels. The model specifically has been used to evaluate the transport of $T_2O(g)$ in Li_2O, but the results of the calculations should be applicable to other solid breeder materials. A summary of the model along with additional results are given in Sec. 10.3.1.4.

The POROUS5 code has been used to study the transport of T_2O in He gas within the interconnected porosity of a Li_2O blanket. There are considerable uncertainties in the value of the effective diffusion coefficient (K) for T_2O diffusing through helium and the blanket permeability (κ). These parameters along with the tritium release rate from Li_2O grains to the interconnected porosity, and the blanket porosity (ε) have been varied over a large range in this study in order to evaluate their affect on the mobility of T_2O.

POROUS5 has been constructed to calculate transient pressurization and transport of a two-component gas within interconnected porosity. It has been applied extensively to calculate the behavior of mixed-oxide fuel during a transient overpower accident of a fission reactor. Its mathematical formalism, however, can be readily adapted for investigation of the percolation of T_2O gas, generated in a breeding blanket of a fusion reactor, through an interconnected porosity containing helium to the helium purge channel. The mathematical derivation assumes the validity of Darcy's law and leads to two coupled parabolic differential equations.[26,27] The change in density, ρ_A, of diffusing material, T_2O, is described by

$$\frac{\partial \rho_A}{\partial t} = \frac{1}{\varepsilon} \nabla \cdot [(\frac{\rho_A \kappa}{\mu}) \nabla p] + \frac{1}{\varepsilon} \nabla \cdot [\frac{pWD_e}{T} \nabla (\frac{T\rho_A}{Wp})] + Q_s \tag{E-8}$$

where Q_s gives the volume rate of release of tritium from Li_2O grains. The change of total pressure, p, of gas in the interconnected porosity is given by

$$\frac{\partial p}{\partial t} = \frac{p}{T}\frac{\partial T}{\partial t} + \frac{R_u T}{W_b} Q_s - R_u T(\frac{1}{W_B} - \frac{1}{W_A}) \frac{\partial p_A}{\partial t} + \frac{T}{\varepsilon W_B} \nabla \cdot (\frac{pW\kappa}{T\mu} \nabla p) \tag{E-9}$$

The solution of these coupled equations requires specification of initial conditions as well as two boundary conditions. POROUS5 solves these equations in a cylindrical geometry permitting specification of several boundary conditions as may be appropriate for a fuel pin during a transient overpower event in a fission reactor.

In the present case, the boundary conditions are very simple. The element of the breeding blanket has been represented by a hollow cylinder with the central hole carrying the purging stream of He at p = 0.1 MPa pressure and satisfying the reflective boundary conditions $\partial p/\partial r = 0$ at the outer surface of the cylinder with no mass flow across it. (Vanishing flow of fission gas at the outer boundary and vanishing partial pressure at the inner boundary are tacitly assumed in the appropriate standard option of the code). In the present investigation, it has been assumed that the tritium source, S, is constant in space and time. The specification of temperatures is based on

the assumption that heat is generated uniformly in the hollow cylinder and discharged through the outer surface in order to represent heat removal by a water coolant in the STARFIRE blanket. In the present study, the inner radius of the cylinder is r_i = 0.15 cm; the outer radius is r_o = 0.75 cm. The outer temperature is T_o = 500°C, and the three inner temperatures that have been used are: 650, 750 and 850°C.

When constructing the POROUS5 code for percolation of a two-component gas mixture, Hofmann[26] carefully examined the empirical and theoretical foundations of several auxiliary models and equations required by the code. In particular, he found that the empirical determination of permeability, K, was quite inaccurate. Also, the theories underlying the diffusion of a two component gas in the interconnected porosity were found to require knowledge of statistical variation of hydraulic distribution, tortuosity, and shape factor of pore spaces so that the magnitude of the effective diffusivity factor K was found quite uncertain.

In the present study, we have chosen K = 1•E-3 for the base case. For this case, we have also chosen the permeability κ = 1.E-13 cm^2, as was employed by Hoffman for the unrestructured mixed-oxide fuel. It has been assumed that the porosity is ε = 0.09 in the base case and the T_2O release rate from the grains is constant and equal to the release rate after the equilibrium situation has been reached. All tritium bred in the grains of Li_2O is being converted to T_2O before release. The tritium breeding rate taken for the base case was an intermediate value: 1.E-8 $kg/m^3/s$ given in Table V-XI of Ref. 28. As the molecular weight of T_2O is 22.03, this caused S = 4.E-10 $g/cm^3/s$ of T_2O to be released into the interconnected porosity (cm^3 refers to the volume of the porosity). K, κ, S and ε have been varied over a wide range and it has been established that equilibrium results are simply related to the values of the four parameters (S, ε, κ and K) used.

The concentration of T_2O, the T_2O partial pressure, and the elevation of total pressure at equilibrium obtained in the computation of the base case (S = 4.E-10, ε = 0.09, K = 1.E-3, and κ = 1.E-13) are displayed in Table E-4. It is seen that a lower temperature gradient leads to a lower rise of total pressure, but to a higher accumulation of T_2O gas in the interconnected porosity. The total accumulation of T_2O gas in the interconnected porosity has amounted to 0.4256, 0.3973 and 0.3454 wt. % for central temperatures 650,

Table E-4. Average Equilibrium Concentration, c (wt. %) and Peak Partial Pressure, p^P (Pa) of T_2O and the Elevation of Total Pressure p^T (Pa) for Three Values of Central Temperatures, T_i (°C). Calculations done for STARFIRE Base Case

Ti	c	p^P	p^T
650	0.4256	92.4	84.9
750	0.3973	85.8	99.3
850	0.3454	80.1	114.2

750 and 850°C, respectively. The times needed to generate this amount of gas are respectively, t = 609, 540 and 481 seconds. The partial pressures of T_2O reached at the outer boundary, P^P = 92.4, 85.8, and 80.1 Pa, respectively, are fairly small compared to the total pressure of He (10^5 Pa), but fairly large compared to partial pressure at which T_2O can be economically recovered from the He stream (0.13 Pa). The release of T_2O into the interconnected porosity is accompanied by an increase of total pressure at outer boundary to p^T = 84.9, 99.3, and 114.2 Pa, respectively.

The findings of this parametric study can be summarized by saying that at equilibrium, if the concentration of T_2O is small, its partial pressure is essentially

$$p^P \propto S \cdot \varepsilon^{-1} \cdot K^{-1} \cdot \kappa^0, \qquad \text{(E-10)}$$

where S is the rate of tritium release per millileter of the interconnected porosity ε. p^P is essentially independent of the permeability κ for 1.E-13 $\geq \kappa \geq$ 1.E-17. The rise of total pressure, however, is essentially

$$p^T \propto S \cdot \varepsilon \cdot K^0 \cdot \kappa^{-1} \qquad \text{(E-11)}$$

Thus the rise in total pressure is inversely proportional to the permeability κ, and for small values of permeability the amount of T_2O present at a given time in the interconnected porosity may be the same as that for a large value of permeability. A possible explanation for this is that for small values of

permeability the T_2O is moved out into the purging He stream faster due to the larger total pressure gradient. Thus, in order for the T_2O to escape, it must diffuse through the He gas producing a strong dependence on K and weak dependence on κ. The two main conclusions of this study are:

1. The amount of T_2O in the interconnected porosity is practically independent of permeability and is inversely proportional to the diffusion coefficient K.

2. For $\varepsilon = 0.09$ and K = 1.E-3 the average residence time of T_2O in the interconnected porosity time is approximately 10 minutes. For values of K smaller by two orders of magnitude the amount of tritium present in the interconnected porosity is still much smaller than the tritium inventory produced in Li_2O grains during several months of operation.

The present calculation of T_2O diffusion through helium in the interconnected porosity has employed the same mechanism used for xenon diffusion through helium by the POROUS5 code. Knudsen diffusion has been suppressed, and ordinary diffusion has been used. The diffusion in the transition region probably should be used in the present case. This change is likely to increase diffusion and to correspond to a higher value of the effective diffusivity factor, K, than that postulated for the base case.

In the present calculations we have neglected the generation of He in the grains of Li_2O, its release into the intergranular porosity and eventual release into the purging He stream. For future calculations, the mathematical formulation will be modified to include this phenomenon. When this is done, the simple approximate relations (E-10) and (E-11) obtained from the present calculations will be modified accordingly.

In the present computation, the viscosity of a binary mixture of helium and xenon has been used. Actually, viscosity appropriate for T_2O at various temperatures should be substituted for the viscosity of xenon. As the weight fraction of T_2O in helium is small, this substitution would produce only a minor change in the viscosity of the binary mixture.

However, it seems fairly certain that the rate of release of T_2O into the purging helium stream will be governed mostly by the rate of release of

tritium from the grains of Li_2O. Fortunately, a suitable mathematical representation for intragranular and intergranular gas behavior has already been developed.[29] The mathematical formulation has been optimized and compacted to produce an efficient computer code GRASS-SST. This code has been shown to produce valid results during steady state and off-normal events. Thus, adaptation of this code for calculation of tritium release from Li_2O grains can also be expected to yield reliable results in the future.

E.4.3 Thermochemical Data

The thermochemical data used to predict the tritium inventories that result from thermodynamic solubility are presented in Tables E-5 through E-9. The tritium inventories were calculated as follows: (1) JANAF thermochemical data were used, (2) isotope effects were not considered, (3) tritium was assumed to be in the form of LiOT in solid solution in the breeder, and (4) the activity coefficients of all species were assumed to be unity. Assumptions 3 and 4 combined may be considered as Raolt's Law.

For a specific example, consider Li_2O:

$$2\ LiOT(c) \rightleftarrows Li_2O(c) + T_2O(g) \qquad \text{(E-12)}$$

$$k_p = \frac{a(Li_2O)\cdot a(T_2O)}{a^2(LiOT)} \quad \frac{p(T_2O)}{X^2} \rightarrow p(T_2O) \quad k_p\cdot X^2 \qquad \text{(E-13)}$$

The data and calculations for Li_2O are shown in Table E-5. The top half of the table presents the values of the free energy, ΔG (calories/mole), as a function of temperature for LiOH(c), $Li_2O(c)$, $H_2O(g)$, and for the reaction shown in Eq. E-12). The bottom half of Table E-5 presents the calculations, as a function of temperature, for $\log_{10} k_p$ ($\Delta G = -RT\ \ell n\ k_p$), the tritium pressure for a tritium concentration in the breeder of 1.0 wppm, and the concentration of tritium in the breeder (wppm) required for a T_2O overpressure of 10^{-2} torr (1.3 Pa).

Tables E-6 through E-9 show the corresponding data for $LiAlO_2$, Li_2TiO_3, Li_2SiO_3, and Li_2ZrO_3, respectively. Note, because ΔG values are not reported for Li_2ZrO_3, the enthalpy and entropy data are also presented and were used to calculate the ΔG values.

Table E-5. Thermochemical Data For: $2\ LiOH \rightleftarrows Li_2O + H_2O$

T	DGLIOHC	DGLI2O	DGH2OG	DGRO
*****	*******	*******	******	******
298	-104920	-134348	-54636	20856
300	-104853	-134294	-54617	20795
400	-101161	-131328	-53519	17475
500	-97400	-128175	-52361	14264
600	-93570	-124824	-51156	11160
700	-89772	-121468	-49915	8161
800	-86015	-118120	-48646	5264
900	-82303	-114789	-47352	2465
1000	-78640	-111430	-46040	-240
1100	-75030	-108198	-44712	-2850
1200	-71475	-104946	-43371	-5367
1300	-67977	-101726	-42022	-7794
1400	-64535	-98536	-40663	-10129
1500	-61152	-95382	-39297	-12375
1600	-57800	-92658	-37927	-14985
1700	-54500	-86514	-36549	-14063

T K	LOG KP	P/TORR FOR T=1 WPPM	REQD. WPPM FOR P=1 E-02 TORR
*****	**********	**********	**********
298	-15.297	3.837E-23	1.6144E10
300	-15.15	5.3754E-23	1.3639E10
400	-9.5487	2.1485E-17	21574288
500	-6.2353	4.4209E-14	475605
600	-4.0654	6.5381E-12	39109
700	-2.5482	2.1509E-10	6818.5
800	-1.4382	2.771E-9	1899.7
900	-.59863	1.9151E-8	722.62
1000	.052456	8.5757E-8	341.48
1100	.56629	2.7996E-7	188.99
1200	.97755	7.217E-7	117.71
1300	1.3104	1.5531E-6	80.241
1400	1.5813	2.8984E-6	58.739
1500	1.8032	4.8306E-6	45.499
1600	2.047	8.4691E-6	34.362
1700	1.8081	4.8852E-6	45.244

Table E-6. Thermochemical Data For: $2\ LiOH + Al_2O_3 \rightleftarrows 2\ LiAlO_2 + H_2O$

T	DGLIOHC	DGAL2O3	DGLIALO2	DGH2OG	DGRLIALO
*****	*******	*******	********	******	********
298	-104920	-378078	-269429	-54636	-5576
300	-104853	-377940	-269337	-54617	-5645
400	-101161	-370418	-264312	-53519	-9403
500	-97400	-362891	-259199	-52361	-13068
600	-93570	-355389	-254003	-51156	-16633
700	-89772	-347920	-248819	-49915	-20089
800	-86015	-340481	-243650	-48646	-23435
900	-82303	-333066	-238493	-47352	-26666
1000	-78640	-325301	-233166	-46040	-29791
1100	-75030	-317396	-227774	-44712	-32804
1200	-71475	-309522	-222404	-43371	-35707
1300	-67977	-301680	-217057	-42022	-38502
1400	-64535	-293868	-211733	-40663	-41191
1500	-61152	-286086	-206432	-39297	-43771
1600	-57800	-278334	-201155	-37927	-46303
1700	-54500	-270612	-194575	-36549	-46087

T K	LOG KP	P/TORR FOR T=1 WPPM	REQD. WPPM FOR P=1 E-02 TORR
*****	**********	**********	**********
298	4.0897	4.9747E-8	58.579
300	4.1127	5.2453E-8	57.554
400	5.138	5.5595E-7	26.201
500	5.7125	2.0371E-6	16.859
600	6.0591	4.6357E-6	12.921
700	6.2726	7.5795E-6	10.968
800	6.4027	1.0226E-5	9.9256
900	6.4759	1.2105E-5	9.383
1000	6.5114	1.3134E-5	9.1313
1100	6.5181	1.334E-5	9.0842
1200	6.5037	1.2904E-5	9.1853
1300	6.4733	1.2033E-5	9.4018
1400	6.4307	1.0909E-5	9.7141
1500	6.378	9.6607E-6	10.116
1600	6.3252	8.556E-6	10.534
1700	5.9254	3.4074E-6	14.317

Table E-7. Thermochemical Data For: 2 LiOH + $SiO_2 \rightleftarrows Li_2SiO_3 + H_2O$

T	DGLIOHC	DGSIO2	DGLI2SIO	DGH2OG	DGRSI
*****	*******	*******	********	******	******
298	-104920	-204032	-372558	-54636	-13322
300	-104853	-203956	-372424	-54617	-13379
400	-101161	-199743	-365117	-53519	-16571
500	-97400	-195492	-357635	-52361	-19704
600	-93570	-191252	-349972	-51156	-22736
700	-89772	-187033	-342321	-49915	-25659
800	-86015	-182842	-334697	-48646	-28471
900	-82303	-178672	-327099	-47352	-31173
1000	-78640	-174526	-319538	-46040	-33772
1100	-75030	-170402	-312015	-44712	-36265
1200	-71475	-166296	-304534	-43371	-38659
1300	-67977	-162207	-297092	-42022	-40953
1400	-64535	-158134	-289690	-40663	-43149
1500	-61152	-154074	-282331	-39297	-45250
1600	-57800	-150027	-275012	-37927	-47312
1700	-54500	-145885	-264974	-36549	-46638

T K	LOG KP	P/TORR FOR T=1 WPPM	REQD. WPPM FOR P=1 E-02 TORR
*****	**********	**********	**********
298	9.771	.060557	.54863
300	9.7475	.057371	.5586
400	9.0547	.011638	.9507
500	8.6133	.0042118	1.3341
600	8.2823	.0019652	1.72
700	8.0118	.0010542	2.1169
800	7.7786	6.1618E-4	2.5318
900	7.5705	3.816E-4	2.9703
1000	7.3815	2.4696E-4	3.4339
1100	7.2058	1.6479E-4	3.9297
1200	7.0413	1.1285E-4	4.4583
1300	6.8854	7.8803E-5	5.0252
1400	6.7364	5.592E-5	5.6339
1500	6.5935	4.0236E-5	6.2873
1600	6.4631	2.9799E-5	6.9492
1700	5.9962	1.0171E-5	9.9436

Table E-8. Thermochemical Data For: 2 LiOH + $TiO_2 \rightleftarrows Li_2TiO_3 + H_2O$

T	DGLIOHC	DGTIO2	DGLI2TIO	DGH2OG	DGRTI
*****	*******	*******	********	******	******
298	-104920	-212593	-377591	-54636	-9794
300	-104853	-212511	-377456	-54617	-9856
400	-101161	-208089	-370156	-53519	-13264
500	-97400	-203592	-362703	-52361	-16572
600	-93570	-199325	-355085	-51156	-19776
700	-89772	-194983	-347493	-49915	-22881
800	-86015	-190665	-339930	-48646	-25881
900	-82303	-186364	-332396	-47352	-28778
1000	-78640	-182080	-324893	-46040	-31573
1100	-75030	-177810	-317422	-44712	-34264
1200	-71475	-173515	-309944	-43371	-36850
1300	-67977	-169191	-302446	-42022	-39323
1400	-64535	-164890	-294976	-40663	-41679
1500	-61152	-160606	-287559	-39297	-43946
1600	-57800	-156338	-280337	-37927	-46326
1700	-54500	-152091	-270513	-36549	-45971

T K	LOG KP	P/TORR FOR T=1 WPPM	REQD. WPPM FOR P=1 E-02 TORR
*****	**********	**********	**********
298	7.1834	2.842E-4	3.2768
300	7.1807	2.8243E-4	3.2837
400	7.2477	3.2956E-4	3.119
500	7.2442	3.2692E-4	3.1274
600	7.204	2.9801E-4	3.2255
700	7.1444	2.5977E-4	3.3765
800	7.0709	2.1937E-4	3.5723
900	6.9888	1.8158E-4	3.8046
1000	6.9008	1.4828E-4	4.0705
1100	6.8082	1.1979E-4	4.3705
1200	6.7119	9.5959E-5	4.7059
1300	6.6113	7.6133E-5	5.0833
1400	6.5069	5.9862E-5	5.5074
1500	6.4035	4.7172E-5	5.9626
1600	6.3284	3.9682E-5	6.3164
1700	5.9105	1.516E-5	8.705

Table E-9. Thermochemical Data For: $2\ LiOH + ZrO_2 \rightleftarrows Li_2ZrO_3 + H_2O$

THERMO DATA FROM A.NEUBERT, D. GUGGI J. CHEM. THERMODYN. 10,297 (1978)

T	HLI2ZRO3	HZR	HLI	HO	DHLI2ZRO
*****	********	******	******	*******	********
298	0	0	0	-419600	-419600
300	52.7	11	11		-419600
400	2924.8	634	632		-419659
500	6100.4	1285	2050		-421067
600	9467	1963	2763		-420937
700	12977	2669	3463		-420700
800	16606	3402	4155		-420385
900	20340	4164	4846		-420016
1000	24171	4953	5536		-419594
1100	28095	5770	6224		-419122
1200	32108	7466	6912		-419453
1300	36208	8160	7598		-418704
1400	40393	8865	8283		-417890
1500	44662	9581	8966		-417010
1600	49013	10309	9647		-416064
1700	53446	11047	45374		-485146

T	SLI2ZRO3	SLI	SZR	SO2	DSLI2ZRO
*****	********	*******	*******	*******	********
298	21.9	6.954	9.314	49.004	-74.828
300	22.077	6.99	9.352	49.047	-74.825
400	30.312	8.774	11.143	51.091	-75.015
500	37.389	11.915	12.593	52.722	-78.117
600	43.523	13.216	13.828	54.098	-77.884
700	48.931	14.294	14.916	55.297	-77.518
800	53.775	15.218	15.895	56.361	-77.097
900	58.172	16.032	16.791	57.32	-76.663
1000	62.208	16.759	17.623	58.192	-76.221
1100	65.947	17.415	18.401	58.991	-75.77
1200	69.433	18.013	19.838	59.729	-76.069
1300	72.719	18.562	20.444	60.415	-75.471
1400	75.802	19.07	20.966	61.055	-74.886
1500	78.747	19.541	21.461	61.656	-74.28
1600	81.555	19.981	21.93	62.222	-73.67
1700	84.242	41.79	22.378	62.757	-115.85

T	DHLI2ZRO	DSLI2ZRO	DGLI2ZRO
*****	********	********	********
298	-419600	-74.828	-397301
300	-419600	-74.825	-397152
400	-419659	-75.015	-389653
500	-421067	-78.117	-382009
600	-420937	-77.884	-374207
700	-420700	-77.518	-366437
800	-420385	-77.097	-358707
900	-420016	-76.663	-351019
1000	-419594	-76.221	-343373
1100	-419122	-75.77	-335774
1200	-419453	-76.069	-328170
1300	-418704	-75.471	-320592
1400	-417890	-74.886	-313049
1500	-417010	-74.28	-305590
1600	-416064	-73.67	-298192
1700	-485146	-115.85	-288199

T	DGLIOHC	DGZRO2	DGLI2ZRO	DGH2OG	DGRLI2ZR
*****	*******	*******	********	******	********
298	-104920	-248502	-397301	-54636	6404.7
300	-104853	-248416	-397152	-54617	6352.9
400	-101161	-243802	-389653	-53519	2952
500	-97400	-239221	-382009	-52361	-348.6
600	-93570	-234678	-374207	-51156	-3544.6
700	-89772	-230168	-366437	-49915	-6640
800	-86015	-225687	-358707	-48646	-9636
900	-82303	-221231	-351019	-47352	-12534
1000	-78640	-216798	-343373	-46040	-15335
1100	-75030	-212390	-335774	-44712	-18036
1200	-71475	-207950	-328170	-43371	-20641
1300	-67977	-203496	-320592	-42022	-23164
1400	-64535	-199059	-313049	-40663	-25583
1500	-61152	-194661	-305590	-39297	-27922
1600	-57800	-190347	-298192	-37927	-30172
1700	-54500	-186040	-288199	-36549	-29708

T K	LOG KP	P/TORR FOR T=1 WPPM	REQD. WPPM FOR P=1 E-02 TORR
*****	**********	**********	**********
298	-4.6976	1.0114E-15	21463
300	-4.6284	1.1859E-15	20354
400	-1.613	1.2287E-12	2011.5
500	.15239	7.1595E-11	518.85
600	1.2912	9.8565E-10	216.48
700	2.0733	5.9674E-9	118.78
800	2.6327	2.1634E-8	77.319
900	3.044	5.5781E-8	56.386
1000	3.3518	1.1333E-7	44.52
1100	3.5838	1.9333E-7	37.259
1200	3.7595	2.8972E-7	32.559
1300	3.8945	3.9533E-7	29.355
1400	3.9941	4.9725E-7	27.194
1500	4.0686	5.9029E-7	25.683
1600	4.1217	6.6712E-7	24.656
1700	3.8195	3.3268E-7	31.093

E.4.4 Preparation and Fabrication

E.4.4.1 Lithium Aluminate Powder Preparation

$LiAlO_2$ has been historically prepared by a variety of methods. Most generally, physical mixtures of Li_2CO_3 and Al_2O_3[30-36] or lithium oxides and alumina[37-41] are calcined at 370 to > 1000°C to form $LiAlO_2$. Precipitation from aqueous solution has also been achieved by the reaction of $LiAl_2(OH)_7$ and NaOH[42] and by reaction of Li^+ and Al^{+3} salt solutions with NH_3.[43] Most recently, a renewed interest in $LiAlO_2$ synthesis has been generated by the need for fine-grained material for electrolyte structures for molten carbonate fuel cells. This work has spawned at least two new synthesis techniques:[44] one employing $Al(OH)_3$ and LiOH as starting materials for a calcination procedure, and one reacting Al_2O_3 with LiOH also in a calcination operation.

Two reference processes are currently being employed for $LiAlO_2$ production for DOE-sponsored molten carbonate fuel cell research, both of which would be applicable to fusion reactor blanket development. The first process yields an α-phase (hexagonal) powder which is currently the reference $LiAlO_2$ phase for STARFIRE. The second process yields a β-phase (monoclinic) powder and is expected to have less applicability to STARFIRE.

The process for making α-powder is described in detail by Singh and Dusek.[45] In this process, $LiAlO_2$ is produced by the reaction

$$Li_2CO_3 + Al_2O_3(\gamma) \xrightarrow{> 873\ K} 2LiAlO_2(\alpha) + CO_2 \qquad \text{(E-14)}$$

Their best results were obtained when a stoichiometric mixture Li_2CO_3 and Al_2O_3 were combined by first dispersing Li_2CO_3 in methanol, slowly mixing in γ-phase alumina, wet ball milling the slurry, centrifuging the slurry, drying the resultant cake, crushing and sieving the dried product, and finally, reacting the powder at 923 K for 95.5 h. Any excess unreacted Li_2CO_3 in the final product can be removed by washing with a mixture of acetic acid and acetic anhydride (50:50).

The process for making β-powder is still under development at Argonne National Laboratory[46] but initial work is described in Ref. 44. In this method, $LiAlO_2$ is produced by the reaction

$$2LiOH + Al_2O_3(\gamma) \xrightarrow{725\ K} 2LiAlO_2(\beta) + H_2O\ . \qquad \text{(E-15)}$$

Currently, the most successful means for producing the $LiOH-Al_2O_3$ mixture is to spray dry a slurry of $\gamma-Al_2O_3$ and dissolved LiOH in a water vehicle and then calcine the LiOH-coated Al_2O_3 powder.

For further detail and a more extensive review of $LiAlO_2$ powder preparation, see Ref. 47.

E.4.4.2 Lithium Aluminate Allotropic Transformation

Both α- and β-phases of $LiAlO_2$ are unstable at elevated temperature and will transform to the γ-phase (tetragonal). The temperatures at which these transformations occur have been measured at Argonne National Laboratory[48] by differential thermal analysis (DTA). It was found that the $\alpha \rightarrow \gamma$ transformation occurs at 1193 K whereas the $\beta \rightarrow \gamma$ transformation occurs at 1148 K. It appears that α and β are stable at lower temperatures and that the transformation to γ will not proceed even with slow kinetic rate. Hold times of 97 h for β and 72 h for α at 1063 K showed no transformation to γ.

The transformation is found to proceed at much lower temperatures if Li_2CO_3 is present in either α- or $\beta-LiAlO_2$.[48] Presumably the Li_2CO_3 serves as either a catalyst or a liquid phase transport medium for a solution-reprecipitation mechanism.

Similarly, the presence of LiOH in α- or $\beta-LiAlO_2$ promotes the γ transformation. It is found[48] that when ∿ 5% LiOH is present, the α-γ transformation will proceed at 690°C and the β-γ transformation will proceed at 720°C. This could pose quite a serious problem in a tritium breeding blanket if LiOT is present and operating temperatures in an α-phase blanket exceed the α-γ transformation temperature. Certainly more information is required regarding the mechanism of the LiOH effect on α-γ transformations to ascertain whether lower LiOH (or LiOT) concentrations will pose significant problems.

Once the γ-phase is present, no conditions have yet been found under which the transformation to γ reverses. No thermal conditions below the transformation temperature have yet promoted reversion back to α- or $\beta-LiAlO_2$. This lack of reversible transformation, which is contrary to general observations of phase transformations in other materials, may be due to extremely slow kinetics, and long-term predictions of γ stability may be unreliable.

E.4.4.3 Lithium Aluminate Fabrication

Most of the $LiAlO_2$ fabrication development has been done on cold-pressed and sintered powder. A description of this sintering work is presented in Ref. 45. Generally the $LiAlO_2$ powders were cold pressed without any binders or lubricants at pressures ranging from 2 to 52 MPa. Specimens were sintered at temperatures ranging from 1175 to 1475 K for times of 0.5 to 4 h. The resultant products were always transformed to γ-phase and contained porosities ranging from 56 to 75% (high porosity was a desired result in the effort cited).

It would appear that any desired porosity from as low as 10% to as high as 70% would not be difficult to achieve in a sintered product. However, in the simple sintering approach, the required sintering temperatures exceed the α-γ transformation temperature. Hence, by conventional techniques, α-$LiAlO_2$ is not sinterable. However, the use of pressure-assisted sintering or some sintering aids might allow sintering to take place below the transformation temperature.

Recent work by Arons and Dusek[49] has shown that $LiAlO_2$ can also be fabricated with a bimodal pore distribution; i.e., one can fabricate a body with fine grain size and fine porosity within agglomerates which are fairly coarse and have a much coarser porosity between the agglomerates. This is accomplished by adding binders to the fine powders to promote agglomeration, crushing and sizing these agglomerates, and then cold pressing and sintering the material. The agglomerates tend to sinter as if they were coarse particles with large porosity between them while simultaneously the fine grains making up each agglomerate sinter together, leaving a fine pore network within the agglomerates.

E.4.4.4 Lithium Oxide Preparation and Fabrication

Lithium oxide (Li_2O) is an inevitable product of calcination of Li_2CO_3 or LiOH above their decomposition temperatures in air, vacuum, or inert atmospheres. Almost all decomposition of Li_2CO_3 or LiOH takes place at or below 700°C,[50] but heat treatment above 700°C is recommended for obtaining clean Li_2O. Generally a sintering operation at $\sim$ 1200°C follows powder preparation and residual CO_2 and H_2O contamination should be removed during this step.

Very few descriptions of Li_2O fabrication exist in the open literature[50-52] and all the work described is fairly superficial preliminary studies on very small volumes of material. Takahashi and Kikuchi[50] describe a study of the fabrication of dense (72-93% theoretical density) Li_2O pellets and the effects of compacting pressure, sintering temperature, atmosphere, and milling time upon final sintered density. Pressing load varied from 1 to 5 T/cm^2, temperatures ranged from 900 to 1200°C for 1 to 4 h in either vacuum or argon.

Anno[51] and Thornton, et al.[52,53] have worked not on sintered pellets but on porous microspheres which are intended as a dust which travels with a coolant gas. Both studies were extremely preliminary and neither was carried very far. Anno attempted to produce 100 μm spheres with 1 to 4 μm interpore spacing. The approach used was a liquid spray molten LiOH to produce small spheres. No other processing details are given, presumably for protection of proprietary material. Thornton et al.[52,53] have attempted to spheroidize granulated Li_2O or Li_2O_2 by passing them through a hot plasma torch.

E.4.4.5 Alternate Breeder Fabrication Processes

Alternate tritium breeder fabrication techniques such as tape casting, hot isostatic pressing and slip impregnating may provide superior breeder packages than with other methods. All three methods are designed to produce solid compacts of the desired density and facilitate the manual insertion of the breeder material.

Tape casting involves the blending of breeding material, organic binders, and plasticizers to produce a slip of controllable viscosity. The slip is then dried as thin pliable sheets which can be shaped, pressured and firmed to produce intricate honeycomb shapes in any configuration. Corning has extensively utilized this process to produce stable, thin-walled, open cell filters and heat exchangers from a glass ceramic material. Large openings for the coolant tubes and smaller channels for the helium purge gas could be readily accomplished thus creating a solid structure that could be easily slipped into the breeder container.

Hot isostatic pressing is an enhancement of the dry pressing/sintering operation. It involves the use of pressure to lower the required sintering temperature needed for physical integrity. The shapes are dimensionally stable with controlled microstructure which could eliminate some of the machining and fitting operations required with the dry pressing/sintering technique.

Slip impregnation is a variation of slip casting, this method involves the formation of a slip or wet slurry and then its impregnation of a woven or foamed grid structure composed of organic fibers. After drying, the body is carefully fired to remove the fibers leaving a porous ceramic with controlled interconnected porosity. The structures can be so shaped as to form sleeve arrangements to accommodate the coolant tubes.

E.5 WATER COOLANT CORROSION

The corrosion product transport model (Sec. 21.7.3) requires material data for the following parameters:

- R - corrosion rate
- R_R - release rate
- k_s - soluble ion deposition rate
- k_c - crud deposition rate
- r_i - in-blanket release rate
- r_o - out-blanket release rate
- C - solubility limits for Fe, Ci, Ni, Mn, and Co species.
- T - residence time

E.5.1 Rate Constants

There have been several reports of PWR experience with steady-state corrosion and material release rates for the materials of interest as shown in Table E-10. The assumed values are probably good to within a factor of 2, and represent values closer to laboratory experiments (see Sec. 21.7).

The required deposition rate constants are averages over the entire system. Taylor[54] reports that LiOH controlled systems have exhibited fairly uniform deposition throughout the circuit with deposition being higher on the cooler surfaces. The opposite is true of NH_4OH systems. For high flow rate

Table E-10. Steady State Corrosion and Release Rates

Material	Taylor[54]	Dillon & Johnson[55]	Sawochka[56]	Assumed for Present Study
		Corrosion Rates (mg/dm^2-mo)		
316 SS	2.5-5.0	1.0-1.5	2	3
Inconel	2.5	1.5-4.0	5	3
Stellite	5-25	5-25	-	5
		Release Rates (mg/dm^2-mo)		
316 SS	0.6-1.5	0.2-1.0	-	1
Inconel	1.0-1.5	0.5-2.0	-	1
Stellite	5-25	5	-	5

*Laboratory data.

systems, the deposition is independent of the flow rate.[57-59] Balakrizhvan and Allison[60] report a crud deposition rate of 4.5×10^{-3} kg/m^2-s. A value of 5×10^{-3} kg/m^2-s is adopted here. They also report a range of $1\text{-}2 \times 10^{-2}$ kg/m^2-s for deposition of solubles (Burrill[61] uses 1×10^{-2} kg/m^2-s). Scaling to the present higher corrosion rates gives a reference value of $k_s = 2 \times 10^{-2}$ kg/m^2-s.

The release rates and residence times for in-core surfaces are reported to be

	Reference 60	Reference 61
r (1/s)	$1\text{-}1.8 \times 10^{-6}$	$1.9\text{-}2.3 \times 10^{-6}$
T (day)	6-11	5-6

A value of $r_i = 1.8 \times 10^{-6}/s$ is adopted here. Such values are determined from specific activity considerations. Typical values of the same release parameters for out of core surfaces are $8 \times 10^{-8}/s$[60] and $2.3\text{-}2.7 \times 10^{-7}/s$,[62] the latter being for the entire system. The present reference value is $r_o = 10^{-7}/s$ (116 days out of core residence time). Note, if particles deposit/release more than once in a given pass through the circuit, then the value of r will increase (and calculated deposit thickness decreases). Hence, the present values are considered to be conservative.

Based on solubility measurements[59] in plants with water chemistry similar to STARFIRE conditions, the following values are adopted:

C_{Fe}	3.8 ppb
C_{Ni}	0.7 ppb
C_{Cr}	<0.1 ppb
C_{MN}	0.3 ppb
C_{Co}	<0.1 ppb

Balakrizhvan and Allison[60] found that the Co/Fe ratio was equal for soluble and insoluble species, and suggest that Co simply follows Fe in species transport. The above value for C_{Fe} (as Fe_3O_4) are in good agreement with minimum measured values of $\sim$ 3 ppb.[60,63,64]

References

1. D. L. Smith, et al., "Fusion Reactor Blanket/Shield Design Study," Argonne National Laboratory, ANL/FPP-79-1 (1979).

2. P. W. Taubenblat, W. R. Opie and Y. T. Hsu, Metals Engineering Quarterly, 12, 41 (1972).

3. Sandvik Steel Catalogue, 1,720 E (1974).

4. T. E. Teitz, J. W. Wilson, Behavior and Properties of Refractory Metals, Stanford University Press, Stanford, California (1965).

5. P. J. Maziasz and T. K. Roche, "Microstructural Characterization of As-Received Prime Candidate Alloy and Examination of Microstructural Sensitivity to Fabrication and Processing Variables," Alloy Development for Irradiation Performance, Quarterly Progress Report for Period Ending March 31, 1979, DOE/ET-0058/5 (1979).

6. Huntington Alloys Handbook, Inconel Alloy 718, Third Edition (1978).

7. F. L. Yaggee, E. R. Gilbert, J. W. Stiles, J. Less, Common Metals 19, 39 (1969).

8. R. E. Gold, et al., "Technical Assessment of Vanadium Base Alloys for Fusion Reactor Applications," COO-4540-1 (Vol. 2) (1978).

9. Nuclear Systems Materials Handbook, Vol. 1, Design Data.

10. A. J. Lovell, "Creep of 20% Cold Worked Type 316 Stainless Steel," HEDL-TME 73-65 (1973).

11. M. L. Grossbeck and K. C. Liu, "Low Cycle Fatigue Behavior of 20% Cold-Worked Type 316 Stainless Steel After Irradiation in HFIR," Alloy Development for Irradiation Performance Quarterly Progress Report for Period Ending June 30, 1979, 42 (1979).

12. L. A. James, "Fatigue-Crack Propagation in Austenitic Stainless Steels," HEDL-SA-1051 (1976).

13. K. Sadanda and P. Shahinian, Met. Trans. A, 11A, 267 (1980).

14. F. W. Wiffen, "Response of Inconel 600 to Simulated Fusion Reactor Irradiation," Effects of Radiation on Structural Materials, ASTM STP 683, 88 (1979).

15. Y. S. Touloukian, ed., Thermophysical Properties of High Temperature Solid Materials, The MacMillan Company, New York (1967).

16. Y. S. Touloukian, R. W. Powell, C. Y. Ho, and P. G. Klemens, eds., Thermophysical Properties of Matter, IFI/Plenum, New York (1979).

17. W. W. Krysko, Trans. AIME, 224, 819 (1962).

18. R. C. Wrast, ed., Handbook of Chemistry and Physics, 56th edition, CRC Press, Cleveland, Ohio (1975).

19. D. L. Smith, J. Nucl. Mater. 75, 20 (1978).

20. D. L. Smith (to be published).

21. H. F. Winters, in Radiation Effects on Solids, M. Kaminsky, ed., American Chemical Society, Washington, D.C. (1976).

22. P. Sigmund, Phys. Rev. 184, 383 (1969).

23. J. Bohdansky, et al., J. Nucl. Mater. 76 & 77, 163 (1978).

24. M. Kaminsky and S. K. Das, Proc. 10th Symp. on Fusion Technology, Padova, Italy, September 4-8, 1979.

25. F. Reif, Fundamentals of Statistical and Thermal Physics, McGraw-Hill, New York (1965).

26. J. R. Hofmann, Nucl. Sci. Eng. 68, 73-90 (1978).

27. R. R. Bord, et al., Transport Phenomena, John Wiley and Sons, Inc. New York (1960).

28. R. L. Hagenson, et al., "The Reversed-Field Pinch Reactor (RFPR) Concept," LA-7973-MS (August, 1979).

29. J. Rest and S. M. Gehl, Nucl. Eng. and Design 56, 233-256 (1980).

30. E. K. Belyaev and V. G. Annopol'skii, Russ. J. Inorg. Chem. 17, 1978 (1972).

31. H. A. Lehmann and H. Hesselbarth, Z. Anorg. Allgem. Chem. 313, 117 (1961).

32. H. E. Huynink, Energy Conv. 12, 139 (1972).

33. A. M. Lejus and R. Collongues, Compt. Rend. 254, 2005 (1962).

34. A. M. Lejus, Rev. Hautes Temp. Refract. 1, 72 (1964).

35. G. H. J. Broers and H. J. J. Van Ballegoy, in: Proc. Third Intl. Symp. on Fuel Cells, Presses Academiques Europeennes, Brussels, p. 77 (1969).

36. S. Gal, K. Tomor, E. Pungor, G. Sooki-Toth, and P. Horvath, J. Thermal Anal. 9, 241 (1976).

37. A. La Ginestra, M. L. Jacono, and P. Porta, J. Thermal Anal. 4, 5 (1972).

38. A. K. Fischer, Inorg. Chem. 16, 974 (1977).

39. F. A. Hummel, J. Amer. Ceram. Soc. 34, 235 (1951).

40. F. A. Hummel, B. S. R. Sastry, and D. Wotring, J. Amer. Ceram. Soc. 41, 88 (1958).

41. C. H. Chang and J. L. Margrave, J. Amer. Ceram. Soc. 90, 2020 (1968).

42. I. S. Lileev, L. K. Sachenko-Sakum, and I. V. Guseva, Russ. J. Inorg. Chem. 13, 213 (1968).

43. H. A. Horan and J. B. Damiano, J. Amer. Ceram. Soc. 57, 2434 (1935).

44. J. P. Ackerman, et al., "Advanced Fuel Cell Development Progress Report," Argonne National Laboratory, ANL/78-71 (1978).

45. R. N. Singh and J. T. Dusek, "Effect of Powder Characteristics on the Sintered Porosity Level of an Insulating Electrolyte Retainer," submitted for publication, Proc. of 1980 International Symp. on Grain Boundary Phenomena in Electronic Ceramics, Chicago, Illinois (1980).

46. J. W. Sim, et al., Argonne National Laboratory, personal communication (1980).

47. K. Kinoshita, J. W. Sim, and J. P. Ackerman, Mat. Res. Bull. 13, 445 (1978).

48. G. Kucera, Argonne National Laboratory, personal communication (1978).

49. R. M. Arons and J. T. Dusek, Argonne National Laboratory, unpublished research (1980).

50. T. Takahashi and T. Kikuchi, "Sintering of Lithium Oxide" JAERI-M 7518 (February 1978) (in Japanese).

51. J. N. Anno, "A Process for Producing Porous Lithium Oxide in Bulk or Microsphere Form," Research Dynamics Inc., Cincinnati, OH, unpublished paper (1979).

52. T. A. Thornton and V. D. Holaday, "Lithium Oxide Microsphere Fabrication for CTF Power Reactor Applications," Ceram. Bull. 58(3), 390 (1979).

53. T. A. Thornton, et al., J. Nucl. Mater. 85 & 86, 323-327 (1979).

54. N. K. Taylor, "Review of Available Data on the Release, Transport and Deposition of Corrosion Products in PWR, BWR, and SGHWR," AERE-R-8164 (1976).

55. R. L. Dillon, A. B. Johnson, "Corrosion Product Generation in Water Reactors," ibid.

56. S. C. Sawochka, N. P. Jacob, W. L. Pearl, "Primary System Shutdown Radiation Levels at Nuclear Power Generating Stations," ibid.

57. D. H. Lister, Nucl. Sci. and Eng. 61, 107 (1976).

58. D. H. Lister, Nucl. Sci. and Eng. 58, 239 (1975).

59. D. H. Lister, Nucl. Sci. and Eng. 59, 406 (1976).

60. P. V. Balakrishvan, G. M. Allison, Nucl. Technol. 39, 105 (1978).

61. K. A. Burrill, "Mathematical Models and Activity Transport," AECL-5227 (1975).

62. P. Cohen, Water Coolant Technology of Power Reactors, (1961).

63. P. Cohen, "The Chemistry of Water and Solutions at High Temperatures for Applications to Corrosion in Power Systems," WARD-5788 (1972).

64. M. Tomlinson, "Surface Processes and Activity Transport," AERE-R-8164 (1976).

Table of Contents

		Page
F.1	INTRODUCTION	F-1
F.2	CHRONIC EXPOSURES TO THE PUBLIC	F-2
F.3	ACUTE EXPOSURE TO THE PUBLIC	F-5
F.4	JET EFFECT FROM A 100-M STACK	F-8
F.5	EXPOSURE TO TRITIUM GAS	F-9
F.6	MITIGATING FACTORS	F-10
F.7	EXPOSURE TO PLANT PERSONNEL	F-11
F.8	MITIGATING EFFECTS OF ANTI-CONTAMINATION SUITS	F-13
F.9	LONG TERM EFFECTS	F-14
F.10	GLOBAL EFFECTS	F-16
F.11	TRANSPORTATION ACCIDENTS INVOLVING TRITIUM	F-20
F.12	TRITIATED SOLID WASTE DISPOSAL	F-21

List of Figures

Number		Page
F-1	Atmospheric diffusion factors for an elevated release and 4-30 days release time	F-3
F-2	Chronic inhalation and skin exposures due to 5000 Ci/yr routine release of tritium	F-5
F-3	Atmospheric diffusion factors for an elevated release and an 0-8 hour release time	F-6
F-4	Total acute inhalation and skin exposures due to 10^5 Ci accidental release of tritium	F-7
F-5	Swedish group global model	F-18

List of Tables

Number		Page
F-1	STARFIRE Design Goals for Tritium Handling	F-1

F.1. INTRODUCTION

The calculation of tritium dose levels for STARFIRE was performed using the equations and methodology used in the TSTA Preliminary Safety Analysis Report[1] and assuming a maximum release of 10 g. The basis for this assumed value is given in Chap. 14. The tritium handling design goals for STARFIRE are tabulated in Table F-1. The assumptions are that any tritium leaking into the reactor building will be in oxide form and that any accidental and most routine tritium leakage from the plant will be directed up the stack.

Calculation of the whole body dose for a standard man is done as follows. The critical organ is taken to be the body water (43 kg mass). The biological half-life is taken as 10 days (8.64×10^5 s). The dose commitment in rads, D, in terms of the total quantity of tritium, q (Curies) in the

Table F-1. STARFIRE Design Goals for Tritium Handling

- Normal ^3T background concentration in both the reactor building and tritium facility:

  $\leq 5 \times 10^{-6}$ Ci/m^3

- Total loss of ^3T into the reactor building during maintenance:

  ~ 0.1 g/yr (or 10^3 Ci/yr)

- Normal loss from the plant:

  ≤ 0.5 g/yr

- Normal influx of ^3T through the first wall to the coolant:

  < 10 Ci/day

- Maximum off-normal loss from the buildings:

  ≤ 0.2 g/yr

- Maximum accident release:

  ~ 10 g

- Leakage across the steam generator:

  ~ 10 Ci/day (or 10 liters/day @ 1 Ci/ℓ)

body water, (assuming no further intake) is D = 96 q. Using a value of Q = 1.0 for the quality factor for tritium as recommended by the NCRP[2] and used in the TSTA PSAR[1] the dose equivalent in rem, DE, is DE = 96 q.

The quality factor (which is sometimes referred to as the relative biological effectiveness) is a measure of how various types of radiation produce relative biological effects when compared to x-rays. The adoption of a quality factor of unity implies that the weak beta particles from tritium decay have an effect similar to x-rays.

F-2. CHRONIC EXPOSURES TO THE PUBLIC

Intake into the body is assumed to be by inhalation and by absorption through the skin. It is assumed that the released tritium (in the worst case) is in the form of water vapor (HTO) and that intake through the lungs is assumed to be 100% of that inhaled. For long-term exposures, an average 24 h breathing rate (B), equal to 1.64×10^{-4} $m^3 s^{-1}$ is used. It is assumed that the skin intake adds another 63% to the dose commitment.[3] Then for chronic exposures with S equal to the source concentration (Ci/yr),

$$DE = 0.041 \frac{\chi}{Q} S \left\{\frac{rem}{yr}\right\} \qquad \text{for chronic exposures.}$$

The values of χ/Q as a function of distance from the reactor building are determined based upon the following atmospheric dispersion assumptions. It is assumed that the release is from a stack at a height of 100 m, under unfavorable dispersion conditions (see Fig. F-1, from Ref. 4) and the average wind speed $\bar{u}$ is 1 m/s, and the wind direction is uniform.

For reactor buildings with stacks the atmospheric diffusion model is as follows: A generalized Gaussian plume formula applies. Thus

$$\frac{\chi}{Q} = \frac{1}{\pi \sigma_y \sigma_z \bar{u}} \exp\left(\frac{-h^2}{2\sigma_z^2}\right)$$

where

χ is the ground-level air concentration (Ci/m^3)

Q is the amount of material released (Ci/s)

$\bar{u}$ is the average wind speed (m/s)

σ_y is the horizontal standard deviation of the plume (m)

σ_z is the vertical standard deviation of the plume (m)

h is the effective height of the release (m)

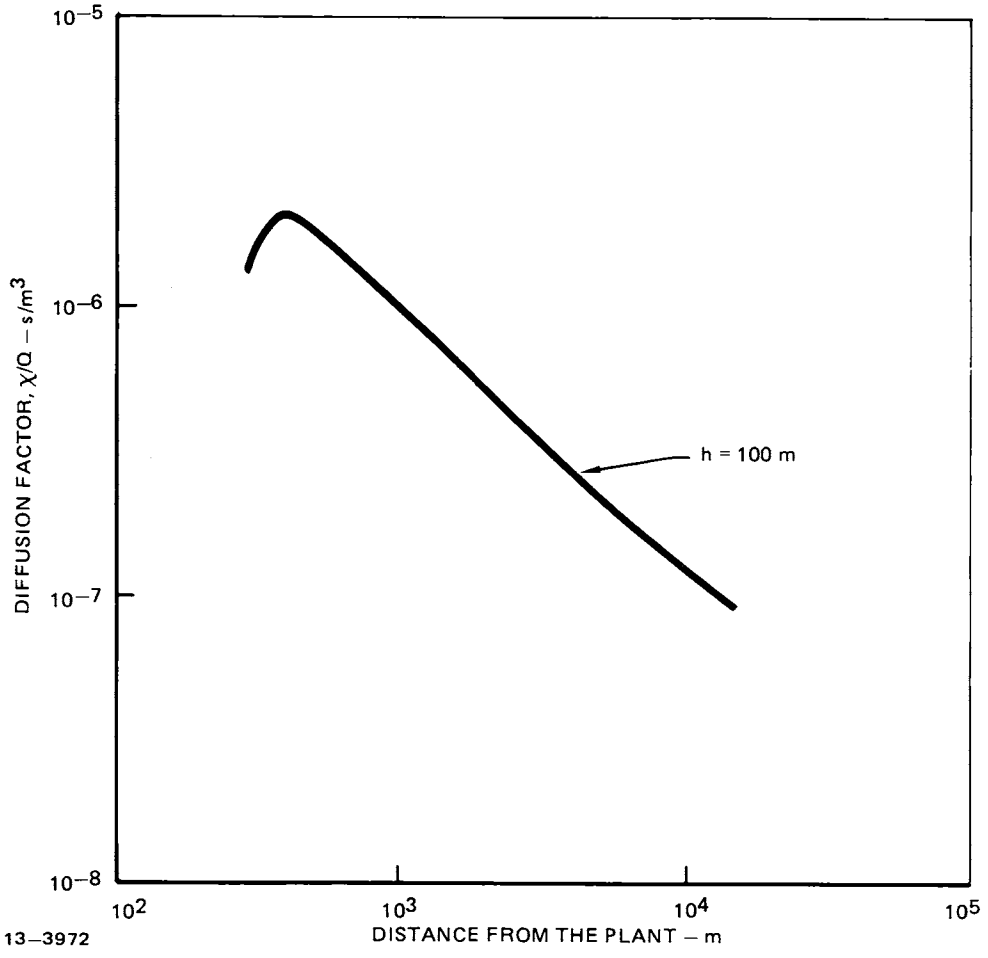

Figure F-1. Atmospheric diffusion factors for an elevated release and 4-30 days release time (Ref. 4).

For reactor buildings without stacks, the basic equation[5] for atmospheric diffusion from a ground level point source is

$$\frac{\chi}{Q} = \frac{1}{\pi \bar{u} \sigma_y \sigma_z}$$

For time periods of greater than eight hours, the plume should be assumed to meander and to spread uniformly over a 22.5 deg sector. The equation for this case is

$$\frac{\chi}{Q} = \frac{2.032}{\sigma_z \bar{u} x}$$

where x is the distance from the point of release to the receptor.

In summary, the chronic exposure of the general public to routine releases of up to 5000 Ci/yr, which is equivalent to 0.5 g of tritium released to the atmosphere per year, is shown graphically in Fig. F-2. The maximum dose of 0.41 mrem/yr occurs at 400 m with a stack. Thus, the maximum dose is much less than the 130 mrem/yr due to natural background radiation. The importance of assuring that such releases are directed to a stack which is on the order of twice the reactor building height is illustrated in Fig. F-2. The chronic exposures would be about 170 times greater for a person located at 300 m for ground level releases when compared to releases up a 100 m stack. This ratio drops to about 12.5 at a distance of 1000 m.

Currently the NRC limit for annual doses due to routine releases from light water reactors is 5 mrem/yr. That value is much higher than the peak value of 0.41 mrem/yr when the tritium releases are all assumed to be up a 100 m stack. If the ground level release values were used for guidance, the exclusion radius would be on the order of 700 m. The previous calculations, however, have not included long-term dose effects due to the absorption of the tritium into the ground, water or plants, and thus the possibility of its getting into the food chain. There is also disagreement today as to what value of the quality factor to use. If the 1.7 value is adopted, rather than the current value of 1.0, the calculated doses will be 70% higher.

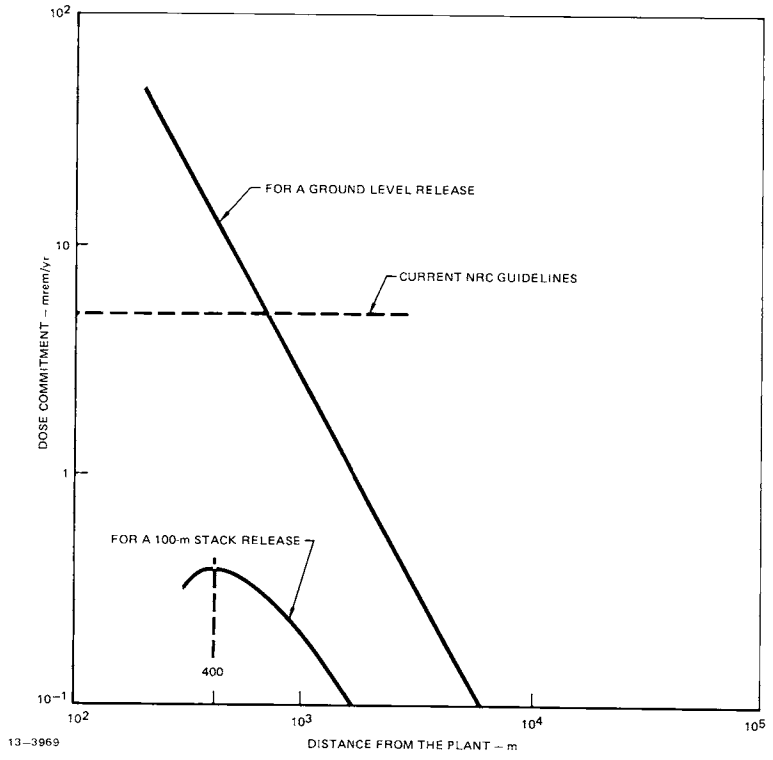

Figure F-2. Chronic inhalation and skin exposures due to 5000 Ci/yr routine release of tritium.

F-3. ACUTE EXPOSURE TO THE PUBLIC

Short-term exposures are assumed to take place during the daytime when an individual's breathing rate B is normal, 3.33×10^{-4} m^3/s, or perhaps even accelerated somewhat, say 5×10^{-4} m^3/s. In the worst case where the tritium is oxidized (either HTO or T_2O), exposure through the skin is assumed to be 50% of that due to inhalation.[3]

For a uniform concentration, C_A, of tritium oxide and for an exposure time t in minutes, the dose equivalent is

$$DE = 4.3\ C_A t \left\{rem\right\}$$

Obviously, if the concentration is not constant, an integration must be performed.

The three cases of accidental tritium release to the environment considered are: from a 100-m stack; from the roof at 50 m; or from ground level. Ten grams (10^5 Ci) of tritium as HTO is assumed to be the

largest amount released. Standard diffusion equations[3,4,6] for a point source are used which give the maximum integrated cloud concentrations at ground level downwind, as a function of distance, height of release and various meteorological conditions, including wind speed. The resultant factors are shown in Fig. F-3, which is taken from Ref. 4. These calculations, conservatively, take no credit for containment of the released tritium by the building.

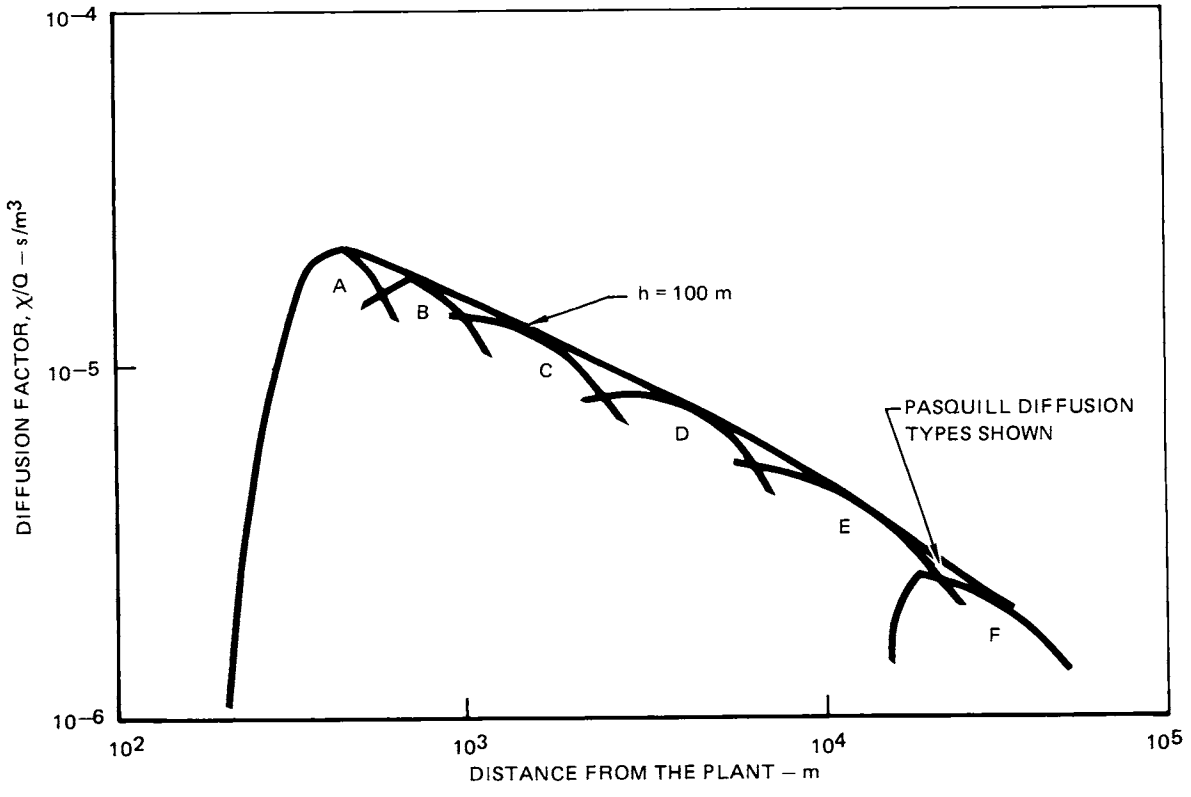

Figure F-3. Atmospheric diffusion factors for an elevated release and an 0-8 hour release time (Ref. 4).

The total acute exposure of the general public to accidental releases of up to 10^5 Ci (10 g) of tritium is shown in Fig. F-4. The maximum acute dose of 150 mrem occurs at about 450 m from the stack. This dose is approximately equal to the average annual dose of 130 mrem due to natural background radiation. This again illustrates the merits of a 100-m stack. The total acute exposures are about 10^4 times greater for a person located at 100 m for a ground level release as compared to the release up a 100-m stack. The

ratio drops to about 5.5 at 10^4 m distance. The values of total acute dose commitments due to an accidental release out the top of a 50-m tall reactor building are intermediate between the values for a ground level release and one up a tall stack. No building wake effects were considered. The enhancement of stack height due to the exit velocity of the plume will be discussed in Sec. F-4.

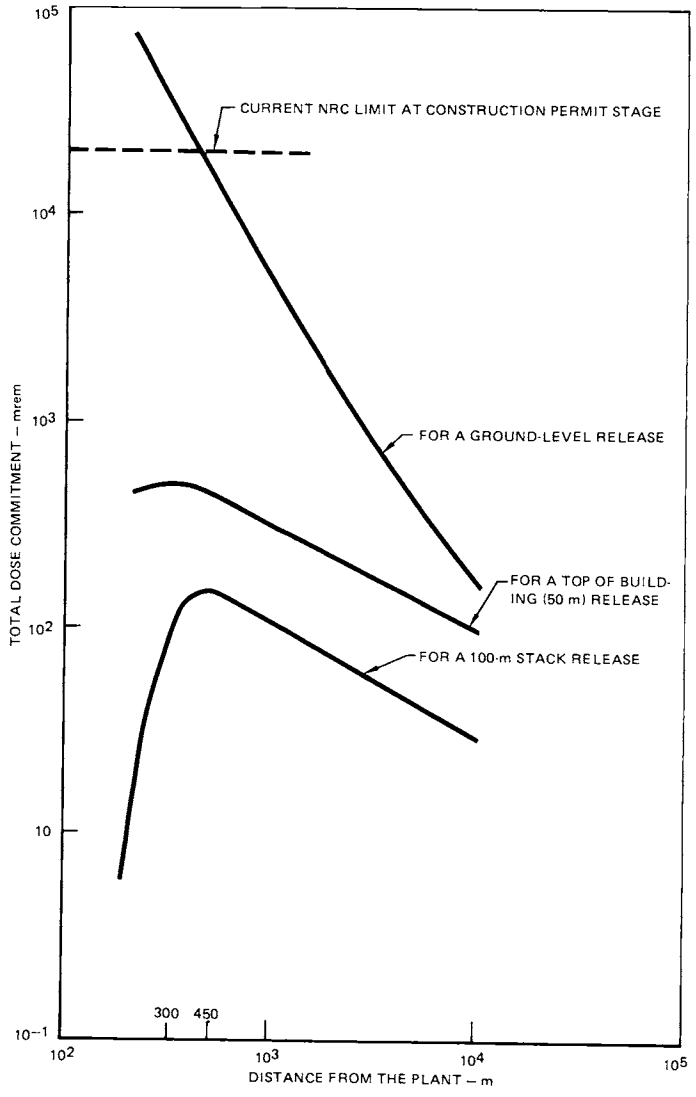

Figure F-4. Total acute inhalation and skin exposures due to 10^5 Ci accidental release of tritium.

The current NRC limits for accidental releases of radioactivity from light water reactors are 25 rem (20 rem at the construction permit (CP) stage) for determining the low population zone (LPZ). The exclusion radius is based on a 2 h exposure to radioisotopes released in the case of an accident. The exclusion radius is obviously somewhat less than the LPZ. Since for these calculations it was assumed that all 10^5 Ci of ^3T was released instantaneously, it was not straightforward to calculate a 2-h exposure.

The 20 rem guideline is much larger than the peak value of 0.15 rem when the release is assumed to be up a 100 m stack. It is also greater than the peak value of 0.5 rem when the release is assumed to be from the top of the reactor building. If the ground level release values were used for guidance, the low population zone radius would be approximately 400 m.

It should be remembered that these calculations have not included long-term dose effects such as absorption of tritium in plants, soil and water and the possible ultimate ingestion by animals and humans. Also, these calculations are for accidental tritium releases only and do not include the possibility of release of activated structural material, e.g., corrosion products.

F-4. JET EFFECT FROM A 100-m STACK

The nominal stack exhaust rate is approximately 1.0 m^3/s (2100 ft^3/min) from a stack 2.0 m (6.6 ft) in diameter. This corresponds to an exit velocity of 0.32 m/s (1.1 ft/s) and an effective stack height that is not significantly greater than its actual height, 100 m (328 ft).

Briggs[7] has established two equations for determining the plume rise, Δh, as a function of distance, x.

$$\Delta h = 1.44 \left(\frac{Wo}{\bar{u}}\right)^{2/3} \left(\frac{x}{D}\right)^{1/3} D$$

and

$$\Delta h_{max} = 3 \frac{Wo}{\bar{u}} D$$

where

W_o is the stack exit velocity (m/s)

$\bar{u}$ is the average wind speed (m/s): assumed to be 1

D is the stack diameter (m)

x is the distance downwind (m).

Whichever equation gives the lesser value is used.

In this case, the first equation gives a plume rise of 7.9 m (at 400 m downwind) and the second, 1.9 m. Thus the 100-m actual stack height is used for estimating maximum doses to the public resulting from stack releases. No credit is taken for the additional height that would result from the exhausted air being at a temperature higher than the ambient air. Also, air entrainment in the plume, which would cause further dilution, has not been included. Nevertheless, these calculated doses are much lower than current standards.

F-5. EXPOSURE TO TRITIUM GAS

The whole body dose following an exposure to tritium gas is four to five orders of magnitude lower than that from an equal concentration of the oxide (HTO or T_2O)[8,9]. Thus, even for a mixture of the two forms (gas and oxide), exposure to the gas is normally neglected.

Because of the weak beta energy, skin exposure to tritium is not harmful since the outer layer of skin is adequate to block the beta particles.

Lung exposure continues to be a controversial item because of the complex lung anatomy which complicates lung surface dose calculations. The current maximum permissible concentration (MPC) for tritium gas is only 400 times that for the oxide. Experiments with laboratory animals (mice) have indicated that the lung surface seems to be relatively insensitive to tritium betas and that the limiting dose is more likely the associated whole body dose resulting from conversion of the gas into oxide, both internal and external to the body.[10,11]

F-6. MITIGATING FACTORS

The doses as calculated in the previous sections are generally conservative compared to real cases for a number of reasons:

1. The probability of releasing 10 g of tritium up the stack and into the environment is very small because of the design of the tritium handling systems and the monitoring and ventilation systems. Even if these systems failed to contain the tritium within the reactor building or the tritium facility, personnel would have time to manually close the isolation valves and/or the relevant ventilation systems blowers before an appreciable amount of tritium could be released.

2. The releases would consist in part of tritium in the gaseous form. Even the design goal release rate of 5000 Ci/yr would include a significant portion as a gas.

3. No credit has been taken for protection of individuals due to closed shelters such as cars or buildings, or due to ordinary clothing (in the case of very short exposures of a few minutes or less). These factors were considered in a recent report by Kocher[12] which was partially prompted in response to concern about what external dose reduction to use for the release at Three Mile Island.

In the case of an accident which releases tritium in the form of the oxide into the reactor building, followed by tritium oxide leaking out of the building, the realistic doses downwind would be less than generally calculated for the following reasons:

1. If the Atmospheric Tritium Recovery (ATR) system is able to function, some of the tritium will be removed.

2. Some of the tritium would be trapped on the building walls and on the surfaces of equipment.

3. For a long-term accidental release, persons downwind could be evacuated.

F-7. EXPOSURE TO PLANT PERSONNEL

The previous calculations have been done in order to predict doses to the general public, although some of the plant personnel will be exposed to comparable doses depending on what their duties are and where their offices or functions are located. The calculations in this section are primarily concerned with the dose levels to which workers who have to go into the reactor building or the tritium facility will be exposed -- for both routine and for accidental release conditions.

Since the reactor building and the hot cell are being designed with the intention of all maintenance being done fully remotely, any persons entering these two facilities would be anticipated to be in anti-contamination (anti-C) suits. The calculations will be based on acute exposure relationships (see Sec. F-3).

The basic equation for the total acute inhalation dose commitment, DE (in rem), is

$$DE = 4.3\ C_A t\ \{\text{rem}\}$$

where C_A is the uniform concentration of tritium as an oxide in Ci/m^3 and t is the time of exposure in minutes.

First, the calculation of dose will be performed for the expected concentration of tritium oxide in the atmosphere of the reactor building following normal operation. The reactor is assumed to be not in operation. The radioactivity due to the activation of materials in the reactor is not included. Due to the fact that an inert atmosphere of CO_2 is used in the reactor building, the workers would be in anti-C suits.

The normal level of T_2O (or HTO) in the atmosphere of the reactor building (volume of $2.55 \times 10^5\ m^3$) is expected to be not greater than $5 \times 10^{-6}\ Ci/m^3$. This is the maximum permissible concentration of tritium in oxide form in air for workers. This tritium level corresponds to a value associated with a 5000 Ci/yr routine release rate.

The dose for such a concentration is

$$DE = 2.15 \times 10^{-5} t \quad \{rem\}$$

where t is the time the person is in the building in minutes. The dose rate in rem/min is obviously the coefficient of the previous equation. (This converts to 1.29 mrem/hr, which is below the current 2.5 mrem/hr limit.) Two-thirds of this value is for the inhalation dose and one-third is assumed to be due to exposure through the skin. An anti-C suit with breathing apparatus would have to reduce the dose rate to these levels under accident conditions to be effective.

The tritium facility is being designed with the goal of keeping the normal level of T_2O (or HTO) in the building atmosphere to not greater than 5×10^{-6} Ci/m^3, the same limit as in the reactor building. No inert atmosphere is planned for the tritium building since activation of the air is not a problem. Thus the dose rate associated with the normal concentration is the same as for the reactor building, 1.29 mrem/hr.

The more critical case is for the amount of exposure a person would get if he or she were working in the reactor building and an accidental release occurred. The person is assumed not to be in an anti-C suit. Assuming the worst case release of 10 g of tritium as oxide into the reactor building, the resulting concentration would be 0.376 Ci/m^3. The corresponding acute dose rate would be 97 rem/hr. This is a high dose rate. Most likely the person would have to evacuate the building as quickly as possible, unless suited in anti-C suit with a good coefficient of effectiveness. It is most likely that maintenance and repair operations which could cause a release of tritium would be suspended whenever personnel without suits are in the building.

If the leak were in the tritium facility, which has a smaller volume (2×10^4 m^3) than the reactor building, the tritium concentration and the dose rate would be much higher. The concentration of 10 g of tritium as oxide accidentally released into the tritium building would be 5 Ci/m^3. This leads to an acute dose rate of 1290 rem/hr without anti-C suit. This is obviously a very high dose rate. Personnel would have to rapidly evacuate.

The tritium facility will have its own, dedicated, atmospheric tritium recovery system which will be used to remove the tritium from the building atmosphere. Based on how efficiently the ATR system performed and the rate at which the tritium soaked into the building walls and component surfaces, it could be determined hypothetically how soon after an accident a worker in proper anti-C gear could enter the building. The ATR is designed with the goal of being able to send workers back into the reactor building and hot cell after 5 days of ATR operation, and back into the tritium facility after two days of ATR operation.

F-8. MITIGATING EFFECTS OF ANTI-C SUITS

Existing ventilated, multilayered, anti-C suits provide a permeation rate of 10^{-5} m^3/min, according to Osborne.[3] He predicts that the suits could be improved by a factor of 5 to provide a permeation rate of 2×10^{-6} m^3/min. Such improved suits are within reach of present materials and technology, but further improvement is not definite. These suits do not have self-contained breathing packs, but rather are provided with outside air and cooling via a umbilical-type cord. Thus, the only tritium which enters the suit is due to leakage at the joints and permeation through the material. For purposes of these calculations the characteristics of the improved suits are used. In the case of a 10-g release of tritium into the reactor building the exposure in one hour would be 38.7×10^{-6} Ci/h, or 3.7 mrem/h.

The maximum permissible body burden (MPBB) of tritium in a standard person is 1000 μCi. Since the critical organ is considered to be the body water (43 kg for a standard person), the MPBB is 0.023 μCi/cm^3 in the body water. This quantity of tritium delivers a dose-equivalent rate of 0.1 rem/wk, or if maintained, 5 rems/yr. Thus, a worker in an anti-C suit could work in the reactor building for a cumulative total of 23.4 hr before reaching the MPBB. (Some allowance should be taken for the length of time it takes to exit from the reactor building and to remove the safety suit.) Of course, the ATR system described in Chap. 14 will reduce the tritium levels.

In the case of a 10 g release of tritium into the tritium facility, the exposure to a person in a suit in one hour is 600 μCi/hr. This value is sufficiently near the MPBB that workers would probably be restricted to less

than one hour each to work on components within the tritium building following an accidental release of 10 g of tritium. The tritium facility also has its own ATR which would go into operation to remove the tritium from the building's atmosphere. If a release were to occur, personnel in the building would exit quickly, then after the ATR had reduced the tritium level, they would be able to reenter the building.

F-9. LONG-TERM EFFECTS

The method for determining doses to the public resulting from the release of tritiated water vapor from fusion facilities has been presented by numerous investigations, including Kastenberg and Okrent[13], McKone[14], and Piet and Kazimi.[15] This method has been incorporated into the AIRDOS computer program. The model uses the Gaussian dispersion method to predict the distribution of a tritium species in the downwind environment. Movement of tritium into biological systems is determined by treating these systems as a series of interacting water compartments. Dispersion and uptake calculations have been applied to a model site in order to predict health effects.

Atmospheric dispersion based on the Gaussian plume model was examined for three release categories: 1) instantaneous releases lasting less than one hour; 2) short-term releases lasting from one hour to several days; 3) continuous uniform releases. The continuous release calculation uses the source rate (Ci/sec) to establish yearly average ground level concentration (Ci/m^3) in radial and angular mesh intervals. Temporal variations in wind speed, stability category, and wind direction are incorporated into the calculation through a wind rose. Short-term release calculations use source quantities (Ci) to determine exposure ($Ci\text{-}s/m^3$) which is the infinite time integral of concentration. In other respects, this category resembles continuous releases. Instantaneous releases are a subset of short-term releases with the exception that effective exposure duration due to plume spreading is comparable to release duration. Briggs' correlations[7] were employed in each category.

Health effects are determined by translating information from the dispersion model into resultant concentrations in biological systems. The dose model represents an effort to predict a reasonable upper limit of consequences from a given release.

Tritium poses little threat as an external radiation hazard to the body because it produces a low-energy beta particle which cannot penetrate the skin. However, it does provide an internal hazard. Tritium enters humans through several paths such as by inhalation and skin absorption, and by ingestion of contaminated food or drinking water in which tritium is taken up directly or through food chain transfer.

A key point is the treatment of food intake along a food chain as continuous, rather than discrete. It is shown that this probably does not add a significant overestimate to short-term dose calculations. Incorporation of tritium from free water into organic molecules in biological systems is accounted for by using the longest reported tritium turnover periods.

Food chain doses result mainly from the intake of tritium by plants which are modeled as receiving tritium through enrichment by contaminated atmospheric moisture. During periods of rain, tritium as HTO is transported from the atmosphere to the soil by wet deposition and to plants mainly by root uptake.

Fortunately, no evidence exists that tritium bioaccumulates in the environment, in food chains, or in man, according to Rohwer and Wilcox.[16] However, due to the nature of such an issue there appears to be continued debate. It should also be noted that neglecting bioaccumulation usually results in larger overall dose predictions.

The tritium leak rates and inventories for the STARFIRE fusion reactor design were estimated to be about 10 Ci/day of HTO for continuous releases and as much as 10^5 Curies (10 g) of HTO for accidental releases. It was found that for a continuous release of 10 Ci/day up a 100 m stack a person living at the site boundary ($\sim$400 m) in a sector receiving the highest yearly average concentrations would receive about 3.5 mrem/yr from all pathways.

For accidental releases with a wind speed of 1 m/s and the worst stability condition, a person at 200 m would receive a dose as high as 6 rem from a 10^5 Curie release of HTO. However, this is a lower commitment per Curie than was found for the 10 Ci/day release rate.

The expected consequences within 80 km of the source from a 10^5 Ci tritium release lasting 1/2 h were found to be from 7 to 3,000 man-rem depending upon site, chemical form of release, and weather conditions.

It was found that release height did not have a significant effect on the dose commitment within 80 km. However, variations in deposition rates due to long term incorporation of tritium in plants did have an effect.

In summary, the long-term biological effects of the release of tritiated water vapor should include the contribution due to ingestion of contaminated food and drinking water. The range of values of dose commitment (in man-rem) varied widely depending upon the site, and the weather conditions. The dose to an individual at 200 m from the release would be as high as 6 rem due to ingestion, compared to 72 rem due to inhalation and skin absorption.

F-10. GLOBAL EFFECTS

The use of a global model will allow an estimate of the world-wide population dose due to tritium releases to the environment. For comparison purposes between the effects of global and local releases, this study has taken a value of 100 reactors (1.2×10^5 MWe total capacity) each releasing 12 Ci/day. The comparison made by Piet and Kazimi[15] of the various tritium release models was used as a guide for calculating the global impact of the STARFIRE design. However, the analysis is not design specific other than making the assumption that each plant releases 12 Ci (or 10 Ci/GWe) of tritium per day.

In global models, local gradients of concentration of tritium are neglected. Instead, one assumes that the released tritium (in the form of HTO), follows world hydrological patterns. Universal tritium contamination of water and food is assumed.

The model adopted for this study is the so-called compartment model. The important parameters are the release magnitude (Q), world population (WP), world water volume (V) and the dose factor (D_f). The half life of tritium is 12.36 years, and the mean life-time is 17.7 years. Hence, for the steady-state case, the dose commitment is 17.7 times the dose calculated for the releases in any one year

The population value assumed is based on the population expected to be typical when STARFIRE design reactors are operating, e.g., WP = 6×10^9. The volume of world water, which dilutes the tritium, has been taken as 2.74×10^{16} m^3 based on the work of Jacobs[17], which assumes that mixing

occurs to a depth of 75 m in the ocean. The dose factor used is the EPA value of 100 rem/yr per Ci/m^3.[15]

Global transport appears to be governed by first-order kinetics, thus compartment models should be appropriate for predicting world doses.[15] The world hydrosphere is divided into compartments rather than taken as a whole, as in the case of the simpler, full dilution models. Transport coefficients link the compartments together. In order for the differential equations describing transport to be well-behaved, all such models modify the coefficients so that no compartment loses or gains water (although they do gain and lose tritium).

Tritium is assumed to be continuously injected into one of these compartments which ultimately sets up an equilibrium among the compartments. Time is introduced into such a model since tritium decays as it changes compartments. Since these models will be seen to result in more tritium staying in the vicinity of tritium sources, hence in population areas, the doses from these models are higher than those from the dilution model. The three models examined were due to Easterly and Jacobs [18], Renne'[19], and a Swedish group.[20]

The most sophisticated model due to Bergman, Bergstrom, and Evans from Sweden divided the globe into 4 latitude bands (90°N - 30°N, 30°N - 0°, 0° - 30°S, 30°S - 90°S). Each band is in turn divided into nine compartments: stratosphere, troposphere, well-mixed layer (sea), short-lived biota, long-lived biota, land, deep sea, and marine biota. Figure F-5 shows how the compartments interact. The general comments for the other models hold true here. For release in the 30° - 90° N zone in various compartments they find that release in the troposphere results in 36% of the dose that would have resulted from land release. Release in the well-mixed layer (ocean surface) results in 4% of the dose from land release. This compares to 20% and 2% respectively from the Easterly-Jacobs model. They also find the dose from tritium released as HT as 1.3 - 1.7 times that of the dose resulting from HTO released. The Easterly-Jacobs model generally shows that HTO release leads to higher doses than does release of HT.

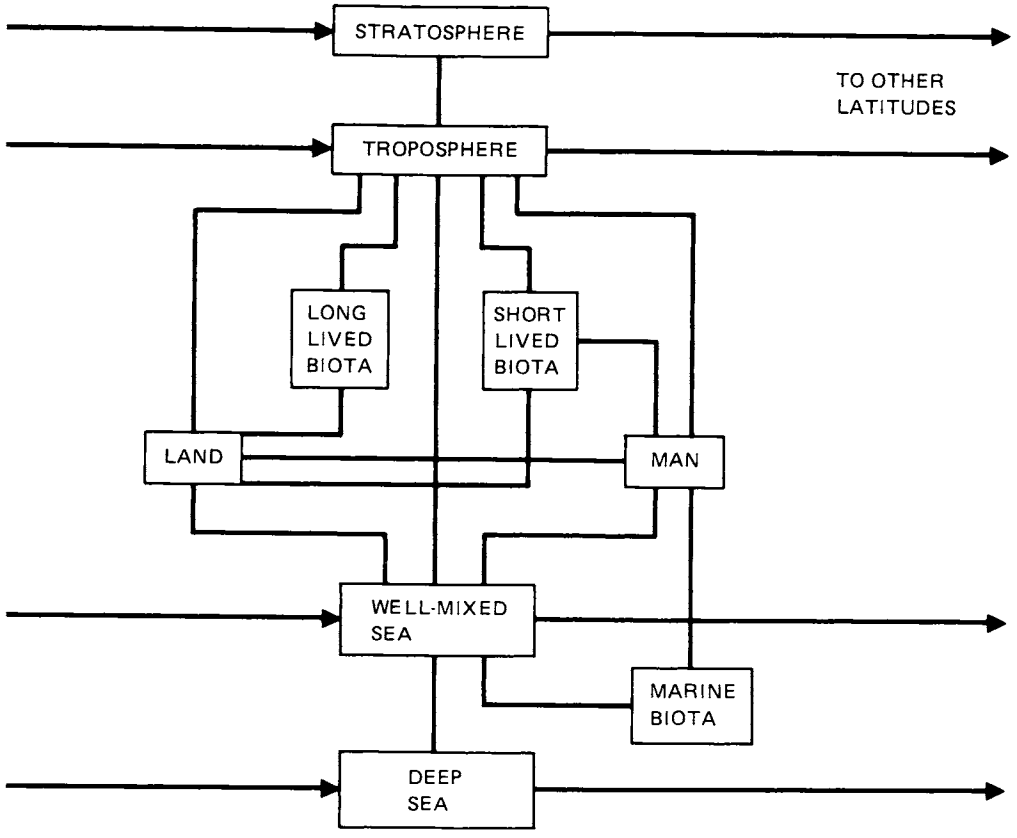

Figure F-5. Swedish group global model (Ref. 20).

By using their figure of 167 mrad per mCi of intake and a daily intake of 2.5 kg/day, one can calculate a dose factor of 152 rem/yr per Ci/m^3 comparable to earlier values. Their model leads to a dose of 0.0024 to 0.0035 man-rem/Ci. For the assumed standard 10 Ci/day - GWe release, this implies that the world dose is predicted to be 1.05 to 1.53 man-rem/yr (which agrees well with the Easterly-Jacobs model).

Although the volume of water and transport to the compartment is assumed to be linear with the world population in this model, the hydrological compartment model doses are not strictly linear with population since the perturbation to adjacent compartments may not be strictly linear, yet it should be close. The same holds for the latitude band model where the variation would be strictly linear only if the population growth were identical for all latitude bands. For the purposes of the present analysis, the dose is assumed to be linear with population.

Although U.S. standards do not apply for global conditions, one can make assumptions to set maximum permissible releases based on the global calculations in order to see if they are possibly more stringent than permissible releases based on local criteria.

Unlike the local dispersion case, the results from global compartment models indicate that surface water release is worse than atmospheric release by about an order of magnitude. At the same time, the specific activity of tritium in air and surface water reach similar equilibrium values.

The models tended to focus on HTO behavior even though other forms are possible. In particular, some analysis for HT was included in the Easterly-Jacobs[18] and Swedish[20] models. The former found that HT leads to less dose (depending on assumptions), while the latter found that HT was 1.3 - 1.7 times more hazardous.

Interestingly, tritium is naturally present in the biosphere. An estimated 10^8 Curies[17,19] is continually present and is caused by cosmic rays.

Another possible released species is CH_3T.[21] As both CH_3T and HT are not significantly taken into the body, the hazard from each depends strongly on their conversion to other species, notably HTO. As CH_3T and HT have similar conversion lifetimes to HTO in the atmosphere, a crude estimate would be that their potential hazards are equal for equal releases.

The global doses due to 12 Ci/day releases to HTO from each 1200 MWe reactor to the atmosphere have been calculated to be approximately 30 man-rem/yr. The dose factor used, that suggested by the EPA (100 rem/yr per Ci/m^3), was higher (more conservative) than those derived in connection with local assessments. The model used incorporates the deep ocean as the ultimate tritium sink.

The global estimates lead to two general conclusions. First, release to the surface water is probably about an order of magnitude worse than release to the atmosphere on the global scale. Second, depending on the estimates of HT to HTO and CH_3T conversion rates, the global hazard from HT and CH_3T is equal to that of HTO release (within a factor of two).

Thus, in a fusion power economy tritium may present some local environmental impact, but its effect on the worldwide population dose will be negligible. The total global tritium impact of 100 STARFIRE reactors would be as high as 3000 man-rem/yr compared to 6×10^8 man-rem/yr due to total natural background radiation.

F-11. TRANSPORTATION ACCIDENTS INVOLVING TRITIUM

The risks from tritium releases in transportation accidents were previously estimated in Ref. 22. Their results for risks from inhalation and skin absorption compare to those of McDone[14] and these in the STARFIRE study. However, the milk, meat and vegetable doses of the earlier work were two to three orders of magnitude higher. There are at least four reasons for this difference.

1) In the previous work all of the land contaminated by the release was assumed to be agricultural land conforming to overall U.S. production statistics. In the present STARFIRE study, based on site location data, only 50 percent of the land near a release is assumed to be agricultural. This is further divided into rangeland and food crops.
2) In the former study, following the recommendations of Anspaugh et al.[23], the half-life of tritium in plants was taken to be one day no matter how short the exposure duration. In this work it has been shown consistent to reduce this half-life for exposures lasting from one day to one hour.
3) In the earlier study, exposure duration was assumed equal to release duration even for releases lasting a few minutes, whereas in the present study exposure duration has been shown to increase with downwind distance.
4) In the previous study they ignored the fact that high ground-level concentrations and subsequent high enrichment of plants for very short-term exposures require a non-zero deposition velocity.

The risks associated with tritium releases as a result of transportation accidents would be very small, especially considering the small quantities and the special packaging and handling that would be involved.

F-12. TRITIATED SOLID WASTE DISPOSAL

Using the results of Easterly and Jacobs[18], a crude estimate of the hazard from tritiated solid wastes is possible. They show that the collective dose to mankind from HTO release in compartments other than surface water results in less exposure. Specifically the long-term (100 yr) fractions for three compartments are: deep ground water, 4%; ocean surface, 2%; and deep ocean, 0.03%. If each plant accumulates and disposes of 1 *Ci/d* of solid tritiated wastes (see Sec. 14.5), then the dose from each plant by injection to these compartments would be 0.12, 0.06 and 0.0008 man-rem/yr, respectively. These should be very conservative estimates for two reasons. First, the tritium in solid wastes is likely to be less mobile than HTO which is the basis for the global model. Second, any credit for the placement of these wastes in containers would reduce the dose. For example, if containers with 100 year integrity were used, the above doses would be further reduced by a factor of 0.0037 due to decay of the tritium.

Thus, the dose due to tritiated solid waste disposal would be far less than the natural background dose due to tritium.

REFERENCES

1. Los Alamos Scientific Laboratory, Tritium Systems Test Assembly Preliminary Safety Analysis Report (May 1979).

2. National Committee on Radiation Protection and Measurement, Report #39, "Basic Radiation Protection Criteria," (1971).

3. R. V. Osborne, "Absorption of Tritiated Water Vapor by People", Health Physics, 12, pp. 1527-1537 (October 1966).

4. U. S. Nuclear Regulatory Commission, Regulatory Guide 1.3, Rev. 2 (June 1974).

5. F. A. Gifford, Jr., "Use of Routine Meteorological Observations for Estimating Atmoshperic Dispersion", Nuclear Safety, 2, pp. 47-51 (June 1951).

6. D. H. Slade (Ed.), "Meteorology and Atomic Energy," TID-24190, NTIS, U.S. Department of Commerce, Springfield, VA (1968).

7. G. A. Briggs, "Plume Rise," TID-24075 NTIS, U.S. Department of Commerce, Springfield, VA (1969).

8. E. A. Pinson and W. H. Langham, "Physiology and Toxicology of Tritium in Man," J. of Applied Physiology, 10, pp. 108-126 (1957).

9. T. T. Trujillo, E. C. Anderson, and W. H. Langham, "Biological Effects of Inhalation of High Concentrations of Tritium Gas," Los Alamos Scientific Laboratory Report, LA-1986 (December 1955).

10. L. K. Bustad, et al., "Evaluation of Long-Term Effects of Exposure to Internally Deposited Radionuclides," in Peaceful Uses of Atomic Energy, II, p. 125, IAEA (1972).

11. J. F. Furchner, "Relative Biological Effectiveness of Tritium Beta Particles and ^{60}Co Gamma Rays Measured by Lethality in CF Mice," Radiation Research, 6, p. 483 (1957).

12. D.C. Kocher, "Effects of Indoor Residence on Radiation Doses from Routine Releases of Radionuclides to the Atmosphere," Nuclear Technology, 48, pp. 171-179 (1980).

13. W. E. Kastenberg and D. Okrent, "Some Safety Considerations for Conceptual Tokamak Fusion Power Reactors," EPRI-ER-546, (July 1978).

14. T. E. McKone, "Environmental Effects of Normal and Off-Normal Releases of Tritium CTR Systems," EPRI-ER-879, (August 1978).

15. S. J. Piet and M. S. Kazimi, "Uncertainty in Modeling of Consequences of Tritium Release from Fusion Reactors," MIT/PFC/TR-79-5 (July 1979).

16. P. S. Rohwer and W. H. Wilcox, "Radiological Aspects of Environmental Tritium," Nuclear Safety, 17, p. 216 (1976).

17. D. G. Jacobs, "Sources of Tritium and its Behavior upon Release to the Environment," USAEC-TID-24635 (1978).

18. C. E. Easterly and D. G. Jacobs, "Tritium Release Strategy for a Global System," Paper presented at the International Conference on Radiation Effects and the Tritium Technology for Fusion Reactors, Gatlinburg, TN, CONF-750989 (March 1976).

19. D. Renne', W. F. Sandusky and M. T. Dana, "An Analysis of Tritium Release to the Atmosphere by a CTR," BNWL-1938 (1975).

20. R. Bergman, V. Bergstrom and S. Evans, "Environmental Transport and Long Term Exposure for Tritium Released in the Biosphere," Paper presented at the International Symposium on the Behavior of Tritium in the Environment, San Francisco, CA, IAEA-SM-232/47 (October 1978).

21. L. L. Burger, "Distribution and Reactions of Tritiated Hydrogen and Methane," PNL-SA-6880 (1978).

22. M. J. Sehnert, T. E. McKone, and W. E. Kastenberg, "Transportation of Tritium Fuel for CTR Power Reactors," Proceedings of the Second Topical Meeting on Technology of Controlled Nuclear Fusion (September 1976).

23. L. R. Anspaugh, et al., "The Dose to Man via Food Chain Transfer Resulting from Exposure to Tritiated Water Vapor," UCRL-73195 (1972).

Table of Contents

		Page
G.1	INTRODUCTION	G-1
G.2	POTENTIAL MAGNETIC FIELD EFFECTS	G-2
	G.2.1 V × B Force	G-2
	G.2.2 Magnetostriction	G-3
	G.2.3 Induced Currents	G-3
	G.2.4 Field Gradients	G-3
	G.2.5 Microstructure and Composition	G-5
	G.2.6 Conclusions on Magnetic Effects	G-6
G.3	WATER CHEMISTRY	G-6
	G.3.1 Gas Concentrations	G-6
	G.3.2 Additives	G-7
G.4	TRANSPORT MODELING	G-9
	G.4.1 Assumptions	G-9
	G.4.2 Mass Balance	G-11
	G.4.3 Activity	G-11
G.5	DATA BASE	G-14
G.6	RESULTS AND CONCLUSIONS	G-15
	G.6.1 Mass Balance	G-16
	G.6.2 Activity	G-18
	G.6.3 Releases	G-21

List of Figures

Number		Page
G-1	Corrosion product transport model	G-10

List of Tables

Number		Page
G-1	STARFIRE Primary Coolant Loop Surface Areas (m^2)	G-14
G-2	Reference Transport Parameters	G-15
G-3	Calculated Outer Layer Film Deposit Thickness	G-16
G-4	Coolant Elemental Concentrations	G-16
G-5	Element Crud Concentrations in LWRs and STARFIRE Primary Coolants (wt-%)	G-17
G-6	Isotope Parameters for Activity Model	G-19
G-7	Ratio of Contribution from Steel Release Activity to Wall Deposit Activity	G-20
G-8	Coolant and Wall Deposit Activity Levels	G-20
G-9	Coolant Biological Hazard Potential Levels	G-21

G.1. INTRODUCTION

This appendix presents an evaluation of the importance of corrosion products in the STARFIRE primary coolant. The activity levels in the coolant and tube wall deposits are determined. The corrosion product transport is modeled. Then the total potentially releasable corrosion products from a loss of coolant accident (LOCA) are estimated. The upper bound release estimate is obtained by assuming that the coolant in one of the two primary coolant loops as well as the entire outer surface oxide layer is released during a LOCA into the reactor building. The mass of corrosion products involved would be 44 kg and the associated activity, 32,000 Ci. This corresponds to $\leq$0.001% of the total blanket activity inventory.

An examination of water corrosion in STARFIRE's primary coolant loop is needed to determine appropriate water chemistry conditions, necessary control equipment, and corrosion product inventory and distribution. The latter information allows determination of activity levels in the coolant and tube wall deposits. Such a study should also include examination of the possible influence of strong magnetic fields.

The appropriate constraints on water chemistry are: (1) minimize corrosion rate; (2) minimize corrosion product inventory; (3) maintain adherent oxide film to reduce corrosion and tritium permeation; (4) avoid stress corrosion cracking; (5) limit tritium production in coolant to 1 Ci/day from ^{7}Li additive burnup; (6) allow for boric acid additions for tritium breeding ratio control; (7) minimize crud deposition; (8) optimize magnetic qualities of corrosion products; and (9) avoid chemical additives which activate. The available variables for control are the concentrations of O_2, H_2, any additives, and pH.

Although the data base for water corrosion of reactor materials is generally more extensive than for any other potential fusion reactor coolant, some information is still lacking. Available data for relevant parameters typically show large variations, especially among operating LWRs. Also, there is often significant discrepancy between laboratory experiments and operating values for corrosion rates. The difference is sometimes attributed to lack of appropriate chemistry control, poor startup procedures, and oxygen leaks[1] (the latter is unlikely for STARFIRE due to inert reactor building atmosphere).

It is postulated that control technology in the STARFIRE time frame will minimize such problems and thus corrosion rates will be closer to laboratory values. Some open questions from this study provide possibilities for future experiments.

Corrosion in LWRs has led to plugging of steam generator tubes, restriction of valve movement, and cracking of tubes.[2] Transport of activated products creates maintenance problems. The routine release of activated coolant products causes some problems, but accidental releases are neglected in WASH-1400[3] analysis. All accidents are assumed to release some fission product gases to the coolant which easily dominates existing corrosion product activity. As such gases are not present in STARFIRE, an accident would tend to involve far less activity in the coolant (except perhaps tritium) than would be present in the fission reactor case.

G.2. POTENTIAL MAGNETIC FIELD EFFECTS

The fusion environment is characterized by having strong magnetic fields. Several possibilities exist for interaction of these fields and corrosion relevant processes as follows: (1) change in ion diffusion in water due to $V \times B$ force; (2) change in ion solid-state diffusion due to $V \times B$ force; (3) induced film stresses from magnetostriction; (4) acceleration of corrosion rate by induced current; (5) increased deposition of coolant particles due to field gradients; (6) corrosion rate alteration by change of film microstructure; and (7) corrosion rate alteration by presence of ferritic steel produced in austenite steel. Such effects need to be addressed to determine influence on optimum water chemistry, transport modeling, and alteration of relevant parameters.

G.2.1 $V \times B$ Force

The force on a charged particle in an electromagnetic field is given by

$$F = q(E + V \times B) .$$

According to the electrokinetic theory of coolant particle deposition,[4,5] interparticle and particle-wall electric fields are responsible for agglomeration and deposition of particles. Although the net charge on coolant particles is not known directly, typical inter-particle potential drops (zeta potential)

are ∿50 mV (or higher in reference water conditions).[4] Since particle sizes are in the 1-μm range, the field is ∿5 T, and velocity is ∿10 m/s, the ratio of magnetic-to-electric force can be calculated,

$$\frac{V \times B}{E} \sim \frac{vB}{\Delta\phi/\Delta x} \sim 10^{-3} ,$$

and the possible V × B force in the coolant is negligible compared to electrostatic forces. As the velocities of ions in solid-state diffusion are far slower, the V × B force should also be neglected in oxide film diffusion.

G.2.2 Magnetostriction

The application of high-strength fields causes magnetic materials to constrict and induce stresses similar to thermal stresses.[6,7] The saturation value of λ_s ($\Delta\ell$ per unit length) for all materials of interest is less than 50 μm/m with Fe_3O_4 highest at 41.[6] Taking λ_s = 50 μm/m and comparing this to the stainless steel value for thermal expansion (20 μm/m-°K), one finds that the maximum magnetostriction corresponds to a ΔT of 2.5°C. Hence it may be neglected.

G.2.3 Induced Currents

As water corrosion is basically an electrochemical process with very small currents, the possibility exists that any induced currents could alter the corrosion rate. Since STARFIRE operates steady state, the coolant tubes should not experience currents except during startup/shutdown of the magnets. The process may be a concern in pulsed machines (although the thermal shock to the oxide film could dominate).

G.2.4 Field Gradients

Filters with high-gradient magnetic fields are very effective in trapping magnetic particles.[8-10] The concern here is the possibility that the blanket could act as one large filter with increased particle deposition rates. The potential magnitude of the effect can be determined by (1) comparison of magnetic force (F_m) to drag force (F_d); and (2) comparison of STARFIRE parameters of interest to those of effective high flow rate magnetic filters.

The force on a particle of saturation field magnetization strength, M_s (volume basis) and radius r can be written:[9-10]

$$F_m = \frac{4}{3} \pi r^3 M_s \frac{dB}{dx}$$

in a field gradient dB/dx. The crucial factor in the analysis is the determination of dB/dx. Typical high-flow filters have dB/dx $\simeq 10^4$ T/m.[9,10]

The overall blanket has gradients of order 1 T/m due to toroidal effects. However, this field could be disturbed due to either magnetic ferritic steel produced in the stainless steel matrix or a magnetic oxide film lining the coolant tubes. The former should be negligible as any disturbances do not occur in the coolant. The latter case is more difficult to treat.

A uniform layer of magnetite on a tube inner wall in a previously homogeneous field does not produce any gradients inside the tubes. This contrasts strongly with the very high gradients in filters which are produced on the outside of a filament matrix. There are two concerns. First, very localized variations in the oxide layer depth may produce relatively high localized gradients. However, any increased deposition would be self-correcting, tending to smooth any variations. This effect also tends to limit the loading of a magnetic filter; as the thickness of deposit increases, the gradient is reduced.[9,10]

The second problem is the presence of nonsymmetic geometries, for example, the first-wall baffle and tube junctions. Precise determination of the field gradient in the vicinity of the wall for these cases is very difficult. For comparison purposes a figure of 10 T/m is adopted.

Then the ratio of F_m to F_d is given by:

$$\frac{F_m}{F_d} = \frac{4/3\ \pi r^3 M_s (dB/dx)}{6\ \pi \mu (v - u)} ,$$

where

r = particle radius $\times 10^{-6}$ m

M_s = 0.46 T at 300°C

dB/dx = 10 T/m

μ = viscosity = 9.2×10^{-5} N-s/m^2

$(v - u)$ = particle velocity relative to coolant velocity in stopping $\gtrsim 1$ m/s

then $F_m/F_d = 9 \times 10^{-3}$ and the magnetic force is <1% of the drag force.

To compare STARFIRE parameters with those of a high flow filter, one notes that the effectiveness varies as $\sim(F_m/F_d)L$ (L = length of passage), or for identical materials, $\sim(dB/dx)(L/v)$, with a dB/dx ratio of 10^3 and L/v ratio of 1/10, then STARFIRE is about 1% as effective as the better high flow filters. Thus the magnetic force should not have a significant effect on the overall value of the deposition rate. However, in very low flow areas, the potential clearly exists for increased deposition.

The magnetic quality of the particles can also have a benefit. An EPRI study[11] on using magnetic filters on PWR primary loops concluded that high temperature filters with flow of $\sim$46 kg/s and 90% efficiency were available and warranted. Placing two filters on each line around the pumps would give an effective removal filtration rate of $\sim$166 kg/s equal to $\sim$1% of the total flow rate. Such a system is adopted for filtration of crud.

The possibility exists to place such filters directly in the STARFIRE magnetic field. However, the power ($\sim$80 kW total) and equipment savings would likely be far outweighed by several disadvantages: (1) restrictions on space inside the toroidal field coils; (2) increased complexity of incorporating filters into design; (3) very limited access; and (4) filter operation tied to operation of the TF coils. Thus the filters are placed outside the torus, and must depend on their own coils for field production. Another potential benefit of the field would be a tendency to reduce crud bursts.

G.2.5 Microstructure and Composition

Some magnetic films grown in strong fields show preferential orientation of domains.[6,7] As noted previously, the outer oxide layer of the steel will be quite magnetic; hence, there is the possibility of preferential orientations in the oxide film. However, the inner layer is far less magnetic. The magnitude and effect of any such orientation on corrosion films appears unknown and could only be determined by experiment. One mitigating technique should be to insure adequate initial film formation during startup before turning on the TF coils.

Although the bulk of the metal alloy is stainless steel, neutron irradiation and/or welding will transform some small percentage to a ferritic structure. Depending on the distribution, such a structure could lead to increased corrosion (ferritic steel corrodes faster). For example, ferritic structure at grain boundaries could lead to preferential grain boundary attack. Any effect due to phase transformation is unknown at present.

G.2.6 Conclusions on Magnetic Effects

The main concerns of magnetic interaction are the increased deposition of particles in very low flow areas and alteration of the microstructure of the oxide film. The advantages of a magnetic filter may provide incentive to maximize the magnetization potential of coolant particles. This suggests an advantage to having Fe_3O_4 rather than Fe_2O_3 as the stable phase (the chemical, hence magnetic, form of the coolant is controllable by water chemistry conditions).

G.3. WATER CHEMISTRY

As mentioned above, there are several constraints on the water chemistry, some are in conflict. Existing data strongly indicates appropriate O_2 levels for pressurized water conditions. The H_2 level is determined by radiolysis considerations to keep O_2 levels to that required. The various constraints on additive additions and optimum pH data determine the remaining variables.

G.3.1 Gas Concentrations

Pressurized water reactors tend to operate at the $\lesssim$5 ppb O_2 (4×10^{-3} cc/kg H_2O), whereas boiling water reactors operate between 0.2-0.3 ppm O_2 (set by steel and Inconel considerations, not by Zircaloy).[11-13] Lowering BWR O_2 levels significantly decreases the protectiveness of the oxide layer; increasing it adds more oxidant, hence higher corrosion rates. The same appears true for PWR conditions; early Russian data show increasing corrosion at higher O_2 levels.[14] As STARFIRE operates as a pressurized system (temperature and pressure virtually the same as PWR's) the data suggests specifying $\lesssim$5 ppb O_2.

Hydrogen gas is added to PWR's to maintain such low oxygen levels in the face of radiolysis of water. For example, Babcock and Wilcox specify 15-40 cc H_2/kg H_2O[15] (1.5-4 ppm) and Combustion Engineering specifies 10-50 cc/kg

(1-5 ppm).[16] Although STARFIRE will operate at lower heat deposition levels to the coolant (average ∿10 kW/kg) than PWRs, the neutron energy spectrum is harder. Without complex, detailed calculations, it is anticipated that the two effects will generally cancel, indicating ∿5 ppm (55 cc H_2/kg H_2O) as an approximate H_2 level. More detailed calculations will be warranted in the future to determine the hydrogen level more accurately. These O_2 and H_2 conditions result in Fe_3O_4 being the stable iron oxide phase.

G.3.2 Additives

Various chemicals are added to the PWR primary loop to serve three functions: (1) getter O_2 at startup; (2) pH control; and (3) reactivity control. All three functions are also included in STARFIRE, the last being the desire to control the tritium production rate (tritium breeding ratio) rather than reactivity.

Hydrazine (N_2H_4) is generally added to the system during startup to remove initial O_2. Typical amounts are 50 ppm.[16] After coming up in power, the hydrazine thermally decomposes to ammonia and tends to control pH, although plants may shift to other additives (e.g. LiOH) to control pH.[15,16]

Addition of small amounts (∿1500 ppm B as boric acid) may be an easy way to "fine tune" the tritium production, and the water chemistry should allow for this.

Possible compounds for pH control include LiOH, NaOH, KOH, and NH_4OH. Among the alkali hydroxides, LiOH is preferred over NaOH and KOH because of fewer stress corrosion cracking problems[17] and no activation.[2] Between LiOH and NH_4OH, there are several tradeoffs.[2,18] Each has advantages:

LiOH	NH_4OH
Very strong base	No tritium production
Stable under irradiation	Less stress corrosion cracking
Non-volatile	Product of hydrazine thermal decomposition

Based on tritium levels already present in the coolant, a limit of 1 Ci/day production due to LiOH additions is adopted. ^{7}Li rather than ^{6}Li is used in PWRs to minimize tritium production; however, the harder fusion neutron spectrum will cause even ^{7}Li to produce significant amounts of tritium. Taking conservative values of 20 m^3 of water in the breeder zone and a 1% ^{7}Li burnup

over module lifetime, the 1 Ci/day limit becomes $\lesssim$2.25 ppm ^{7}Li. Current PWR operation allows up to $\sim$2.5 ppm ^{7}Li largely due to stress corrosion cracking (SCC) considerations.[12,16] In STARFIRE, some nucleate boiling is allowed and cold-worked structure is used; both are known to increase SCC problems. Without experimental data, a limit of $\sim$2 ppm ^{7}Li (10^{-4} M LiOH) is adopted. Such a concentration is also typical of PWR operating conditions with stainless steel fuel cladding.[19]

While firm NH_4OH limits are also not well known for stainless steel/Inconel systems, a limit of $\sim$10 ppm NH_3 is inferred from Combustion Engineering limits on feedwater in the absence of copper alloys.[19]

Without SCC constraints, several authors maintain that a $pH_{25°C}$ of $\sim$10 is optimum for corrosion minimization.[2,20,21] This corresponds to $pH_{300°C} \sim 7$ for LiOH dosing. Sawochka's data[19] suggests there is little incentive for $pH_{300°C} \gtrsim 6.9$. (The pH of a solution varies with temperature, e.g. $pH_{300°C}$ of pure water is 5.7.) Furthermore, to avoid electrokinetic deposition, one wishes to maintain conditions away from the point of zero charge (PZC).[4,5] Tomlinson[5,26] reports that no relevant materials have a PZC between $pH_{25°C}$ 6.8-11.2. Finally the solubility of Fe_3O_4 is minimum around $pH_{25°C} \sim 9.5$.

To obtain $pH_{300°C} = 7$ requires 0.4 ppm Li ($pH_{25°C} = 9.75$) or 50-100 ppm NH_3 ($pH_{25°C} \sim 12$-13). Furthermore, if boric acid is used, the situation is even worse. To obtain $pH_{300°C} \sim 7$ with 1000 ppm boron (as boric acid) requires $\gtrsim$2 ppm lithium or very large amounts of NH_4OH. Allowance of boric acid additions tend to favor use of LiOH over NH_4OH. The reference conditions are then $pH_{25°C} \sim 9.5$ ($pH_{300°C} \sim 6.75$) with 0.22-2.2 ppm ^{7}Li (LiOH) and 0-1500 ppm boron (boric acid). Given the constraints imposed, it is not surprising that STARFIRE optimum conditions are the same as those for PWRs.

The concentrations of other elements must generally be kept to very low levels. For example, chlorine, fluorine, and lead concentrations should all be kept <0.1 ppm.[2,16,19] The only special concern for STARFIRE might be lead impurities from the zirconium-lead multiplier. However, calculations show that to reach 0.1 ppm (steady state) would require lead diffusion into the coolant through the first and second coolant walls at a rate 10-100 times faster than the iron release rate which already dominates dissolution into the coolant. A level of 0.1 ppm lead could be reached for a short time if $\gtrsim$40 g lead quickly dissolved due to some sort of leak. Neither case seems likely.

In summary, the operating conditions are: $ph_{25°C} \sim 9.5$; $O_2 \sim 5$ ppb; $H_2 \sim 5$ ppm; LiOH $\sim$ 0.22-2.2 ppm ^7Li; and boric acid $\sim$ 0-1500 ppm boron.

G.4. TRANSPORT MODELING

The modeling of corrosion product transport generally divides into two phases.[13,20,22] First, the physical amount of each element by location (coolant, wall deposit) is calculated by mass balance. Second, the level of radioactivity is determined by balancing the rates of production and removal. All parameters appear to reach steady state within the 6-yr lifetime of a module, except perhaps long-lived species like ^{60}Co.

Figure G-1 shows the basic movement of mass throughout the system. The corrosion rate of the alloys is the net source term; the removal rate of the filters, the net sink term. The important resulting parameters are the coolant concentrations and amount of wall deposits. Activation of the coolant system is dependent upon (1) dwell time of particles in blanket during coolant passage; (2) deposition of particles to wall in blanket, then release; and (3) corrosion and release of activated stainless steel in the blanket. The last one is a fundamental difference from LWRs with Zircaloy cladding on the fuel. Zircaloy does not form products like ^{60}Co and ^{58}Co, but the Zircaloy oxide film tends to be very adherent and does not release products to the coolant (except for crud bursts).[20] Thus the STARFIRE case is closer to that of reactors with stainless steel cladded fuel which have greater corrosion problems than Zircaloy-cladded ones.[2] LWR activity transport modeling has been done for Zircaloy-cladded fuel reactors, so that the potential dominant effect of in-blanket steel corrosion needs to be added.

G.4.1 Assumptions

To reduce such a complex situation to the level appropriate for this study requires many assumptions and simplifications. Current models[13,20,22,23] divide the coolant into soluble (ion) and insoluble (crud) species and divide the wall deposits into inner and outer layers (generally of equal depth).[23]

Deposition of both coolant species (ion and crud) is proportional to coolant concentrations. Thus, the deposition rate = $k_s C_s + k_c C_c$ where k_s and k_c are the deposition rate constants, and C_s and C_c are the ion and crud concentrations. Solubility limits C_s,[2,20] and mass balance determines C_c. Ion species

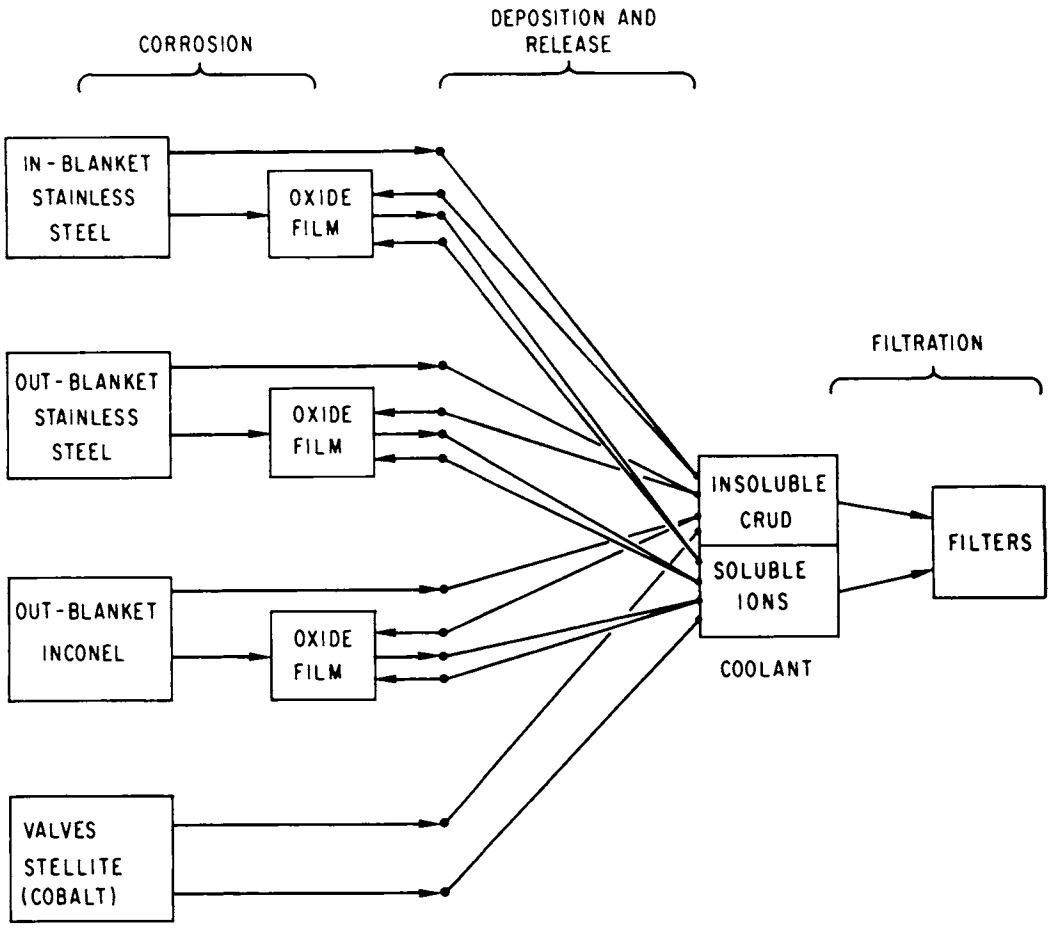

Figure G-1. Corrosion product transport model.

deposition appears tied to the corrosion rate as ions incorporate directly into the growing inner film and crystallize on the outer film surface.[23] The crud particles deposit directly on the outer film surface. Avoiding the point of zero charge (PZC) for relevant particles keeps the crud deposition rate to a minimum by maintaining electrostatic repulsion between wall and particle.[4,24] Above $pH_{25°C} \sim 9$, all species are electronegative and will tend not to agglomerate.[24] All chemical species tend to deposit at the same rate.[20] The available data base will be used to determine values for k_s and k_c for conditions most similar to the reference case.

The oxide film releases both ions and particulates back to the coolant. The crud release is a surface process tied to the corrosion rate, whereas the dissolution rate is given by rW, where W = total wall thickness (g/m^2) and r = release rate (1/s) (r is a function of solubility gradients).[22] Again, all

chemical species are assumed to release at the same rate, r.[20] The residence time of a particle on the wall is then $\tau = 1/r$ at steady state. Values for r are to be determined for the literature. W is fixed by mass balance.

The corrosion of the base alloy (if stainless steel or Inconel) results in some fraction directly released to the coolant and some adding to the oxide film.[2,23] The release of trace cobalt is proportional to its relative alloy composition.[20,25] Furthermore, existing models assume all element release is proportional to alloy composition.[2,20,25] One exception is iron and nickel release from Inconel. Apparently iron is released twice as fast as nickel.[21] This explains why Inconel/Zircaloy systems show more iron in the coolant than nickel, as will be discussed in Sec. G-6.

G.4.2 Mass Balance

There are three models for overall system mass balance; a reference case and two alternatives:

(1) All components reach steady state. Thus the net production of corrosion products (= RA) must balance the net sink $\left(Q_s C_s + Q_c C_c\right)$: $RA = Q_s C_s + Q_c C_c$. The wall film grows by the corrosion rate itself (R) and deposition $\left(k_s C_s + k_c C_c\right)$. Release occurs by direct release from corrosion $\left(R_R\right)$ from crud and ion dissolution (rW). Then $R + k_s C_s + k_c C_c = R_R + rW$.

(2) Same as (1) except all release is assumed to be accounted for by deposit layer release (rW): $R + k_s C_s + k_c C_c = rW$. In models (1) and (2), $W = W_{inner} + W_{outer}$, where $W_{inner} = W_{outer} = 1/2\ W$.

(3) The inner oxide layer does not reach steady state. Then the balance must occur between filtration and the net amount released from corrosion: $R_R A = Q_s C_s + Q_c C_c$. The outer layer only directly interacts with the coolant and $rW = k_s C_s + k_c C_c$. Here W is only the outer layer thickness.

G.4.3 Activity

The basic model for determining activity levels is that of Kennedy[21] with alteration for the corrosion of activated stainless steel. At steady state one writes the specific amount of radionuclide in the alloy,

$$\beta = \frac{C_{ss}\sigma\phi}{\lambda} ,$$

where

β = number of atoms of given isotope/kg steel

C_{ss} = number of target atoms/kg steel

$\sigma\phi$ = transmutation rate (s^{-1})

λ = decay constant (s^{-1})

for each nuclide. For present purposes only seven isotopes will be examined: ^{58}Co, ^{60}Co, ^{51}Cr, ^{54}Mn, ^{56}Mn, ^{59}Fe, ^{55}Fe as these are dominant (see Sec. G-6.2). Although more than one reaction may contribute to the formation of these isotopes, the model will assume that the total amount can be approximated by focusing on one production reaction each. Thus, the detailed neutron runs for STARFIRE provide values for $\lambda\beta$ (specific activity) for each isotope and zone of blanket. Use of C_{ss} determines $\sigma\phi$ values for the model. This approximation generally cancels from the final calculation as $\sigma\phi$ is re-multiplied by either C_{ss} or W_i to obtain the amounts of radioisotopes.

The balance for the coolant is then for each radioisotope

$$V \frac{d\gamma}{dt} = UC_T V \sigma\phi - kA\gamma + \sum_{\text{surfaces}} rA\omega - \lambda V\gamma + R_R A\beta - Q\gamma ,$$

where

$UC_T V \sigma\phi$ represents isotope production due to dwell time

U = fraction of coolant in blanket

C_T = $C_s + C_c$

V = total volume of coolant

$(kA + \lambda V + Q)\gamma$ represent removal by deposition, decay, and filtration

γ = number of atoms/m^3 coolant

$rA\omega$ = the addition due to nuclides releasing from wall

ω = number of atoms/m^2 wall

$R_R A\beta$ = the addition due to direct release of corrosion products.

Rearranging and substituting for β gives:

$$0 = V\frac{d\gamma}{dt} = \left[UC_TV + \frac{R_RAC_{ss}}{\lambda}\right]\sigma\phi - (Q + kA + V\lambda)\gamma + \sum rA\omega \ .$$

The balance for the in-blanket wall is

$$\frac{d\omega_i}{dt} = W_i\sigma\phi + k\gamma - r_i\omega_i - \lambda\omega_i + \left(R - R_R\right)\beta \ .$$

$W_i\sigma\phi$ is the production of isotopes in the wall deposit (in blanket wall thickness); and $\left(R - R_R\right)\beta$ is the addition due to activated corrosion product remaining on the wall.

Rearranging,

$$0 = \frac{d\omega_i}{dt} = \left[\frac{\left(R - R_R\right)C_{ss}}{\lambda} + W_i\right]\sigma\phi + k\gamma - \left(r_i + \lambda\right)\omega_i \ .$$

The out of blanket wall is then (steel not activated, wall deposits not irradiated)

$$0 = \frac{d\omega_0}{dt} = k\gamma - \left(r_0 + \lambda\right)\omega_0 \ .$$

Solving ω_0, ω_i for γ gives

$$\omega_0 = \left(\frac{k}{r_0 + \lambda}\right)\gamma \ ,$$

$$\omega_i = \left(\frac{k}{r_i + \lambda}\right)\gamma + \left[\frac{\left(R - R_R\right)C_{ss}}{\lambda} + W_i\right]\frac{\sigma\phi}{\left(r_i + \lambda\right)} \ .$$

Substituting ω_0, ω_i in the term $\sum rA\omega$ and solving for γ gives

$$\gamma = \sigma\phi\left\{\frac{UC_TV + \left(R_RA_iC_{ss}/\lambda\right) + \left[r_i/\left(r_i + \lambda\right)\right]\left[\left(R - R_R\right)A_iC_{ss}/\lambda + W_iA_i\right]}{Q + \lambda V + \lambda k\left[A_0/\left(r_0 + \lambda\right) + A_i/\left(r_i + \lambda\right)\right]}\right\} \ .$$

These values will be compared to a simple model based on the observation that in stainless steel clad PWR cores the specific activity throughout the system (longer-lived species) is equal to that of the stainless steel times the ratio (area in core/total area).[2] For this simple, very conservative model, one obtains,

$$\gamma = \left(\frac{C_{ss}\sigma\phi}{\lambda}\right)\left(\frac{A_i}{A_i + A_0}\right) C_T ,$$

$$\omega_0 = \left(\frac{C_{ss}\sigma\phi}{\lambda}\right)\left(\frac{A_i}{A_i + A_0}\right) W_i ,$$

$$\omega_i = \left(\frac{C_{ss}\sigma\phi}{\lambda}\right)\left(\frac{A_i}{A_i + A_0}\right) W_0 .$$

G-5. DATA BASE

The transport model requires STARFIRE data for the following parameters:

A (m^2)	wetted surface areas
V (m^3)	coolant volume
Q_s (kg/s)	soluble ion filter rate
Q_c (kg/s)	crud filter rate
Q_T (m^3/s)	total mass (or volume) flow rate.

The relevant calculated surface areas are shown in Table G-1.

Table G-1. STARFIRE Primary Coolant Loop Surface Areas (m^2)

	In-Blanket	Out-of-Blanket	Total
Stainless steel	12,000	3,000	15,000
Inconel	0	45,000	45,000
Total	12,000	48,000	60,000

In addition a linear scale-up of the Stellite (cobalt alloy used in valves) alloy from CANDU[12] reactors indicates $\sim 7.5\ m^2$. The water volumes are $20\ m^3$ (in-blanket) and $550\ m^3$ (total).

The total mass flow rate is 1.66×10^4 kg/s = Q_T. As mentioned in Sec. G.2, the crud will be removed by four magnetic filters with an effective filtration rate of 1% of flow, hence Q_c = 166 kg/s. The reference case assumes the same rate (Q_s = 166 kg/s) for solubles.

Use of the model requires estimates of relevant transport parameters. The reference values are shown in Table G-2 as discussed in Appendix E. These low corrosion rates pose no hazard to structural integrity.

Table G-2. Reference Transport Parameters

Corrosion rate, R (mg/dm^2-mo)	3
Surface release rate, R_r (mg/dm^2-mo)	1
Deposition rate (g/m^2-s)	
Crud, k_c	5
Ion, k_s	20
Release rate/s	
In-blanket, r_i	1.8×10^{-6}
Out-blanket, r_o	10^{-7}
Solubility (ppb)	
Iron, C_{Fe}	3.8
Nickel, C_{Ni}	0.7
Chromium, C_{Cr}	≤ 0.1
Manganese, C_{Mn}	≤ 0.3
Cobalt, C_{Co}	<0.1
Total ion solubility, C_s	~ 5

G.6. RESULTS AND CONCLUSIONS

Given the models and available data, the mass balances and activity levels are calculated.

G.6.1 Mass Balance

The solution for each of thre three models are shown in Table G-3 and compared to observed values for LWRs. The observed concentrations of crud range from ∿10 ppb (pH of 10.5) to ∿100 ppb (pH, ∿7).[21] Using the assumption that the outer film depth equals one-half the total depth, then Cohen's data[2] indicates an in-blanket outer film thickness between 0.1 and 25 g/m^2.

Table G-3. Calculated Outer Layer Film Deposit Thickness

Model	C_c (ppb)	In-Blanket, W (g/m^2)	Out-blanket, W (g/m^2)
1[a]	36	0.10	1.78
2	36	0.11	2.00
3	9	0.08	1.44
Observed	10-100	0.1-25	——

[a]Reference model.

By assuming that the release products are the same as the base alloy composition (except for the preferential iron release from Inconel), the values for the total crud elemental concentrations are calculated and shown in Table G-4.

Table G-4. Coolant Elemental Concentrations

Element	ppb		
	C_T	C_S	C_C
Fe	23.9	3.8	20.1
Ni	10.3	0.7	9.6
Cr	6.1	0.1	6.0
Mn	0.51	0.1	0.2
Co	0.021	0.003	0.018
Total	41.	5.	36.

As STARFIRE is a stainless-steel/Inconel system the elemental balance in the crud should be intermediate between current Zircaloy/Inconel PWRs (very little steel) and all steel LWRS (no Inconel). This is indeed the case as shown in Table G-5. Thus, the calculated concentrations for STARFIRE are, as expected, intermediate between pure steel and Zircaloy/Inconel systems. The composition ranges for Zircaloy-clad PWRs again indicate that iron is preferentially released from Inconel.

Table G-5. Element Crud Concentrations in LWRs and STARFIRE Primary Coolants (wt-%)

Reactor Type (Alloy System)	PWR[a] (Zr/Inconel)	STARFIRE (Stainless Steel Inconel)	PWR[b] (Carbon and Stainless Steel)	BWR[b] (Stainless Steel)
Fe	39-51	56	75-87	80
Ni	22-43	27	4-8	7
Cr	15-29	17	9-15	0.4

[a]Ref. 13.
[b]Ref. 21.

The total potentially releasable corrosion products from a loss of coolant accident (LOCA) can be estimated for three cases:

LOCA-I: If the entire coolant from one loop leaked out, this would release 8 g of metal to the reactor building.

LOCA-II: During crud bursts and shutdown situations in PWRs the crud composition tends to increase by factors of 100-200. Added conservation due to the more harsh environment involved might raise that to a factor of 250. Then 2 kg of metal would be released.

LOCA-III: An upper bound on released material is obtained by assuming that the entire outer surface oxide layer is removed (equals one-half total oxide depth). This would result in 44 kg (one loop) released to the reactor building.

G.6.2 Activity

The following nuclides have been detected in PWR coolants:[13] ^{58}Co, ^{60}Co, ^{51}Cr, ^{54}Mn, ^{56}Mn, ^{55}Fe, ^{57}Co, ^{59}Fe, ^{65}Ni, ^{95}Zr, ^{95}Nb, ^{97}Zr, and ^{187}W. Based on calculations on STARFIRE blanket activity, seven isotopes were selected for transport calculations: ^{60}Co, ^{58}Co, ^{55}Fe, ^{59}Fe, ^{51}Cr, ^{54}Mn, and ^{56}Mn. These totally dominate PWR coolant activity (except for the absence of ^{95}Zr from the Zircaloy) and represent 91% of the blanket activity for STARFIRE at shutdown (the dominant missing isotope is ^{99}Mo, which has not been previously detected in PWR coolants) and 96% of the activity after 10 days. These are thus the dominant isotopes for operating contamination and release calculations. The long-term disposal contamination levels would be dominated by a different isotope mix as discussed later.

For the isotopes of interest, the activity equations can be simplified by noting that $UC_TV << A_iW_i$ (production due to coolant dwell time is always dominated by activation of wall deposits) and

$$\lambda V \quad << \quad Q + k\lambda\left[\frac{A_0}{r_0 + \lambda} + \frac{A_i}{r_i + \lambda}\right],$$

(decay of isotopes while suspended in coolant can be neglected). Then the number of atoms of each radioisotopes is given by:

$$\gamma(\#/m^3) \quad = \quad \sigma\phi\left(\frac{1/3\left(RA_iC_{ss}/\lambda\right) + \left[r_i/\left(r_i + \lambda\right)\right]\left[2/3\left(RA_iC_{ss}/\lambda\right) + A_iW_i\right]}{Q + k\lambda\left\{\left[A_0/\left(r_0 + \lambda\right)\right] + \left[A_i/\left(r_i + \lambda\right)\right]\right\}}\right) .$$

where C_{ss} (number of target isotopé atoms/kg of stainless steel) and W_i (number of target isotope atoms/m^2 of in-blanket deposit) are calculated from the mass balance results.

Using the values of shutdown specific activity (Ci/kg stainless steel) in the blanket weighted by surface area location, one obtains values of $\sigma\phi$. The relevant parameters for the seven isotopes are shown in Table G-6. The total activity is about 9.5 kCi/kg steel. The assumption (Sec. G-4.1) that each isotope is produced from a single target isotope (giving $\sigma\phi$ values) can cause

Table G-6. Isotope Parameters for Activity Model

Isotope	Main Parent	Parent Abundance (%)	$T_{1/2}$	Ci/kg Steel
^{60}Co	^{59}Co	100	5.27 y	171
^{55}Fe	^{54}Fe	5.82	2.6 y	4690
^{54}Mn	^{54}Fe	5.82	303 d	447
^{58}Co	^{58}Ni	67.88	72 d	732
^{59}Fe	^{58}Fe	0.33	45.1 d	18
^{51}Cr	^{50}Cr	4.35	27.8 d	1200
^{56}Mn	^{55}Mn	100	2.576 h	2250

error only when the relative isotopic distributions of W differs from C_{ss} (the basis for specific activity calculations). For isotopes of interest, these differences are slight; furthermore, the stainless steel release contribution to coolant activity dominates the wall deposit activation except for the short-lived isotope, ^{56}Mn.

The relative contributions of in-blanket steel release to oxide film activity is shown in Table G-7. The longer-lived isotopes are seen to be totally dependent on the steel activity. Note that the direct steel release pathway does not exist for Zircaloy-clad PWRs. The additional pathway contributes about forty times (weighted over Ci/kg steel levels) more activity to the coolant activity levels than does activation of wall deposits.

The coolant and wall deposit activity levels are now calculated and shown in Table G-8. Results are also shown for the simple specific activity model (coolant specific activity = steel activity × surface area ratio — see Sec. G-4.3). The crude surface area model overpredicts coolant levels relative to the reference model by not taking into account decay and filtering losses. As expected, the overprediction generally increases as half-life decreases. The alternative model overpredicts out-of-blanket surface levels, but underestimates in-blanket amounts as it assumes that specific activity levels everywhere are equal. Again the discrepancies tend to increase with decreasing half-life. In the extreme case of ^{56}Mn, there is very little activity on out-blanket surfaces due to rapid decay.

Table G-7. Ratio of Contribution from Steel Release Activity to Wall Deposit Activity

Isotope	Ratio	$T_{1/2}$
^{60}Co	82	5.27 y
^{55}Fe	77	2.6 y
^{54}Mn	25	303 d
^{58}Co	3.4	72 d
^{59}Fe	3.7	45.1 d
^{51}Cr	2.0	27.8 d
^{56}Mn	0.2	2.576 h

Table G-8. Coolant and Wall Deposit Activity Levels

Isotopes	^{60}Co	^{55}Fe	^{54}Mn	^{58}Co	^{59}Fe	^{51}Cr	^{56}Mn
Reference Model							
mCi/m^3 H_2O	0.96	23.3	2.02	2.64	0.06	3.87	8.81
Ci/kg crud	32	784	68	89	2	130	297
mCi/m^2 in-blanket	12.3	322	31	55	1.2	96	278
mCi/m^2 out-of-blanket	86	2020	152	118	2	94	1
Surface Area Model							
Ci/kg crud	34	940	89	146	3.5	240	450
mCi/m^2 in-blanket	7	190	18	30	<1	48	90
mCi/m^2 out-of-blanket	123	3400	322	531	13	864	1620

The activity levels of very long-lived isotopes could be easily calculated using either the simple specific activity model or the reference model (eliminating the wall deposit pathway). The total calculated shutdown levels are then 42 mCi/m^2 H_2O, 800 mCi/m^2 in-blanket, and 2500 mCi/m^2 out-of-blanket. The decay ten days after shutdown is almost entirely due to ^{56}Mn.

G.6.3 Releases

Releases can be either normal or off-normal. Assuming 100 liters H_2O/day leakage from primary to secondary coolant loops (as in the tritium case), a normal activity release can be calculated of <3.3 mCi/day (assuming a 1.0-day decay before release from the secondary). As seen in Table G-9, the primary coolant water could be released to unrestricted areas if diluted by a factor of 100 (assuming adequate time for ^{56}Mn decay).

Table G-9. Coolant Biological Hazard Potential Levels[a]

Isotope	MPC Water (Ci/m^3)	Required Dilution	MPC Air (Ci/m^3)	BHP Air (km^3)
^{60}Co	3×10^{-5}	32	3×10^{-10}	3560
^{55}Fe	2×10^{-3}	12	3×10^{-8}	830
^{54}Mn	1×10^{-4}	20	1×10^{-9}	1920
^{58}Co	9×10^{-5}	29	2×10^{-9}	790
^{59}Fe	5×10^{-5}	1.2	2×10^{-9}	14
^{51}Cr	2×10^{-3}	1.9	8×10^{-8}	18
^{56}Mn	1×10^{-4}	88.1	2×10^{-8}	42

[a]MPC (maximum permissible concentrations) are for insoluble species released to unrestricted areas (see Ref. 27); required dilution = dilution required to reduce coolant levels to MPC_{water}; BHP listed is for the maximum release to the atmosphere (Case LOCA-III).

Accidental releases can be determined for the three LOCA cases discussed in Sec. G.6.1. A simple (one loop) coolant leak would involve 12 Ci (LOCA-I). For cases where the wall deposit is disturbed (coolant material increase by a factor of 250, coming from all loop surfaces), then 2700 Ci could

be released (LOCA-II). An upper bound due to the total activity in the outer depth of the oxide layer through one loop is 32,000 Ci (LOCA-III). As seen in Table G-9, such a release would have a BHP of $\sim$7200 km^3 in air). Any releases would be to the reactor building, rather than directly to the environment; hence, any releases to the environment would be much less than the values presented here.

Compared to fission, the harder neutron spectrum causes increased amounts of ^{55}Fe and ^{54}Mn; however, they have far lower relative toxicity. Although in terms of BHP, ^{60}Co is still a dominant hazard, the relative importance of minimizing cobalt in the out-of-blanket portion of the system is significantly decreased. Since >98.5% of the ^{60}Co activity comes from trace cobalt in the blanket steel (rather than other parts of the system), the only significant method of reducing ^{60}Co is reduction of ^{59}Co in the stainless steel.

The maximum corrosion product release to the reactor building (32,000 Ci for CASE LOCA-III) corresponds to $\leq$0.001% of the total blanket activity inventory. It is difficult to determine what fraction of the mobilized material could reach the environment by leaking from the reactor building; however, deposition and settling should decrease the material by about ten. Thus, the maximum corrosion product release to the environment is $\sim$0.0001% of the blanket activity inventory.

REFERENCES

1. W. R. Greenaway, Proc. System Contamination Workshop, Atlanta, Georgia, March 15-17, 1976 (EPRI, 1976), p. 55.

2. P. Cohen, Water Coolant Technology of Power Reactors (Gordon and Breach, New York, 1969).

3. N. C. Rasmussen, "Reactor Safety Study," WASH-1400 (1975).

4. H. P. Hermansson, "Electrokinetic Deposition of Waterborne Particulates," Aktiebolaget/Atomenergi, Sweden, AE-512 (1977).

5. C. Heck, Magnetic Materials and Their Applications (Crave amd Russak, New York, 1974).

6. B. D. Cullity, Introduction to Magnetic Materials (Addison-Wesley, Reading, Mass., 1972).

7. M. Tomlinson, "Transport of Corrosion Products," High Temperature High Pressure Electrochemistry in Aqueous Solutions (National Association of Corrosion Engineers, 1973), p. 221.

8. M. Troy, "Study of Magnetic Filtration Applications to the Primary and Secondary Systems of PWR Plants," EPRI-NP-514 (1978).

9. J. A. Obertenffer, "Magnetic Separation: A Review of Principles, Devices, and Applications," IEEE Trans. Magnetics MAG-10, No. 6, 1696 (1975).

10. F. E. Lubobky and B. J. Drummond, "High Gradient Magnetic Separation Theory Versus Experiment," IEEE Trans. Magnetics MAG-11, No. 6, 1696 (1975).

11. J. Blok, "Characterization of Corrosion Product Deposits in BWR," Proc. System Contamination Workshop, Atlanta, Georgia, March 15-17, 1976 (EPRI, 1976), p. 81.

12. R. L. Dillon and A. B. Johnson, "Corrosion Product Generation in Water Reactors," ibid., p. 67.

13. A. J. Kennedy, "PWR Crud Characterization and Transport Modeling," ibid., p. 95.

14. V. V. Gerasimov, ed., "Corrosion of Reactor Materials: A Collection of Articles, AEC-tr-5219 (1960).

15. F. J. Pocock, "Introduction to the Session on Contamination Control Techniques," Proc. System Contamination Workshop, Atlanta, Georgia, March 15-17, 1976 (EPRI, 1976), p. 153.

16. C. E. McCracken, "Chemistry Control Techniques to Reduce Corrosion," ibid., p. 161.

18. W. E. Berry, "The Corrosion Behavior of Fe-Cr-Ni Alloys in High-Temperature Water," High Temperature High Pressure Electrochemistry in Aqueous Solutions (National Association of Corrosion Engineers, 1973), p. 48.

19. P. Cohen, "The Chemistry of Water and Solutions at High Temperatures for Applications to Corrosion in Power Systems," Westinghouse Atomic Research Division, WARD-5788 (1972).

20. S. C. Sawochka, N. P. Jacob, and W. L. Pearl, "Primary System Shutdown Radiation Levels at Nuclear Power Generating Stations," Proc. System Contamination Workshop, Atlanta, Georgia, March 15-17, 1976 (EPRI, 1976), p. 125.

21. P. V. Balakrishnan and G. M. Allison, Nucl. Technol. 39, 105 (1978).

22. N. K. Taylor, "Review of Available Data on the Release, Transport, and Deposition of Corrosion Products in PWR, BWR, and SGHWR," United Kingdom Atomic Energy Authority, AERE-R-8164 (1976).

23. K. A. Burrill, "Mathematical Models and Activity Transport," Atomic Energy of Canada, Limited, AECL-5227 (1975).

24. D. H. Lister, Nucl. Sci. Eng. 61, 107 (1976); ibid., 58, 239 (1975); ibid., 59, 406 (1976).

25. R. Casparina and E. Ioannilli, "Prevention and Control of Corrosion Product Deposition in a BWR," Proc. American Power Conference 33, 776 (1971).

26. I. Falk, "Release of Corrosion Products from Cobalt Containing Structural Materials," Aktiebolaget Atomenergi, Sweden, AE-517 (1977).

27. M. Tomlinson, "Surface Processes and Activity Transport," Proc. System Contamination Workshop, Atlanta, Georgia, March 15-17, 1976 (EPRI, 1976), p. 106.

28. Code of Federal Regulations - 10CFR20, Title 10 - Atomic Energy; Part 20 - Standards for Protection Against Radiation (U. S. Government Printing Office, 1980).

Table of Contents

		Page
H.1	INTRODUCTION	H-1
H.2	APPROXIMATE EXPRESSIONS FOR TF COIL GEOMETRY	H-1
	H.2.1 Parameters as Functions of R_1 and R_2	H-2
	H.2.2 Direct Calculation from Moses and Young Approximation	H-2
	H.2.3 Coil Cross Sections	H-4
	H.2.4 Stored Energy	H-5
H.3	MODEL FOR OH COIL LOCATION AND CURRENT	H-5
	H.3.1 The OH Solenoid	H-5
	H.3.2 Locations of Other OH Coils	H-6
	H.3.3 Currents	H-7
H.4	CONTROL OF TOROIDAL FIELD RIPPLE THROUGH TF COIL GEOMETRY AND FERRITIC IRON	H-8
	H.4.1 Ripple Variation with TF Coil Outer Radius and Number of Coils	H-8
	H.4.2 Ripple Control with Ferritic Iron	H-8
H.5.	ELECTROMAGNETIC ANALYSIS OF A HOLLOW LIMITER DESIGN	H-9
	H.5.1 Introduction	H-10
	H.5.2 The Hollow Limiter	H-11
	H.5.3 Computation via EDDYNET	H-11
	H.5.4 Results	H-13
	H.5.4.1 Power	H-14
	H.5.4.2 Line Currents, Forces, and Torques associated with Eddy Current Modes	H-15

List of Figures

Number		Page
H-1	Geometric parameters for a constant-tension toroidal field coil	H-1
H-2	H_{max} as a function of R for R = 13 m and for 12 or 16 coils	H-4
H-3	Field ripple (peak to mean) for STARFIRE and for design variations	H-9

Number		Page
H-4	Modeling the hollow limiter for the program EDDYNET	H-12
H-5	Eddy current paths of normal modes in limiter projected on x-y plane. Positions A,B,C,D,E and F are defined in Fig. H-4.	H-16
H-6	Peak torque on the hollow limiter as a function of plasma discharge time τ_o.	H-18

List of Tables

Number		Page
H-1	TF Coil Ripple Reduction with Ferritic Iron. R_1 = 2.785 m, R_2 = 14 m	H-10
H-2	TF Coil Ripple Reduction with Ferritic Iron. 12 Coils, R_1 = 3.04 m, R_2 = 12.5 m	H-10
H-3	Cases Considered	H-13
H-4	First Four Eddy Current Modes of the Limiter	H-14
H-5	Forces and Torques of Support and Limiter Modes	H-15
H-6	Peak Torques for Different Plasma Decay Time Constants τ_o, calculated from values with $\tau_o = 0$	H-17
H-7	Peak forces and torques from Computation with $\tau_o > 0$. . . .	H-17

H.1 INTRODUCTION

This appendix contains descriptions of some of the analytical tools used to design the magnet systems for STARFIRE in its early stages, as well as the analyses of some design options which were not included in the final STARFIRE design but for which either the design option or the method of analysis might be useful in future fusion reactor studies. Section H.2 describes methods to approximate the TF coil geometry, Sec. H.3 discusses the approximate location of OH coils for a pulsed reactor, Sec. H.4 describes the variation of TF ripple with TF coil geometry, and Sec. H.5 gives the electromagnetic analysis of a hollow limiter design. It was largely on the basis of this analysis that the hollow design concept was replaced by the one described in Chapter 8.

H.2 APPROXIMATE EXPRESSIONS FOR TF COIL GEOMETRY

Methods for finding approximate values for TF coil geometrical parameters are useful both for parametric studies which optimize overall reactor systems and for the layout of proposed design options. The ANL TF coil model[1,2] has been modified and used for these purposes in the design of STARFIRE. These modifications are described in this section.

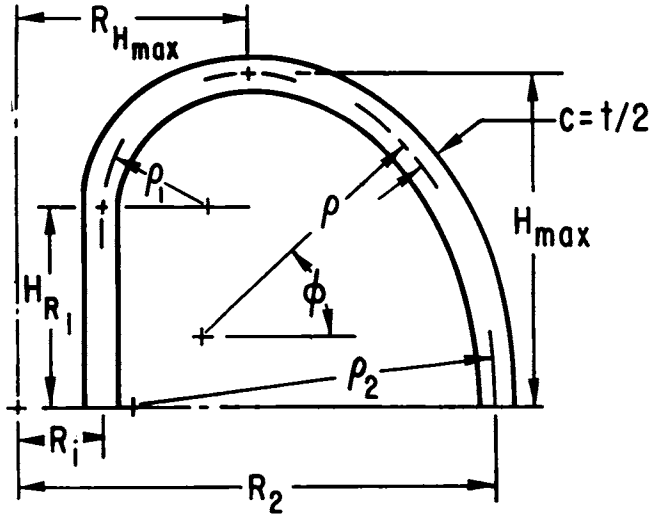

Figure H-1. Geometric parameters for a constant-tension toroidal field coil.

H.2.1 Parameters as Functions of R_1 and R_2

The geometrical parameters of a constant tension coil are shown in Fig. H-1; approximate values of these can be found by the method of Moses and Young.[3] Equations (23) through (28) of reference 2 express the parameters ρ_1, ρ_2, H_{R_1}, H_{max}, $R_{H_{max}}$, and L as functions of R_1 and R_2, based on a TF coil system with N = 16 coils. When applied to the 12-coil STARFIRE TF coil system, the equations overestimated the coil half-height H_{max} by nearly 0.3 m. The expressions were then re-evaluated for N = 12 coils; they are:

$$\rho_1 = 0.101\ R_2 + 0.595\ R_1 - 0.775\ R_1^2/R_2 \tag{1}$$

$$\rho_2 = 1.094\ R_2 - 2.390\ R_1 + 1.550\ R_1^2/R_2 \tag{2}$$

$$H_{R_1} = 0.786\ R_2 - 2.345\ R_1 + 1.800\ R_1^2/R_2 \tag{3}$$

$$H_{max} = 0.941\ R_2 - 1.892\ R_1 + 1.138\ R_1^2/R_2 \tag{4}$$

$$R_{H_{max}} = 0.256\ R_2 + 1.220\ R_1 - 0.550\ R_1^2/R_2 \tag{5}$$

$$\begin{aligned} L &= \text{Circumference} \\ &= 4.828\ R_2 - 8.360\ R_1 + 4.200\ R_1^2/R_2 \end{aligned} \tag{6}$$

Parameters predicted by Eq (1) - (6) agree with those of the final STARFIRE design to within 7 cm.

H.2.2 Direct Calculation from Moses and Young Approximation

It is also possible to calculate the Moses and Young[3] approximation to the coil shape directly with the following 28-card FORTRAN program which calculates H and R from their Eq. (20). Input variables are:

R2 = R_2 = mid-radius of outer leg
RHO2 = ρ_2 = radius of curvature at R_2
XN = N_c = number of coils
DPHI = $\Delta\phi$ = angular step size

DPHI, typically 2°, is input in degrees and converted into radians in the program. R2 and RHO2 must have the same dimensions (e.g., meters). Output of interest includes:

$H_{max} = H(\phi = \pi/2)$

$R_{H_{max}} = R(\phi = \pi/2)$

$R_1 \quad = R(\phi = \pi)$

$H_{R_1} \quad = H(\phi = \pi)$

$\rho_1 \quad = RHO(\phi = \pi)$

$L \quad = 2[L(\phi = \pi) + H_{R_1}]$

Unfortunately, R_1 is an output rather than an input. The program must be run iteratively to find the value for a desired R_2 and R_1.

```
101 FORMAT (8F10.3)
102 FORMAT (1H )
  2 WRITE (6,102)
    READ (5,101) R2,RHO2,XN,DPHI
    WRITE (6,101) R2,RHO2,XN,DPHI
    IF (R2.EQ.0.) STOP
    DPHI=DPHI*ATAN(1.)/45.
    XNI=1./XN
    PHI=0.
    R=R2
    RHO=RHO2
    XL=0.
    H=0.
    PHI=DPHI/2.
  4 DH=RHO*COS(PHI)*DPHI
    DR=-RHO*SIN(PHI)*DPHI
    H=H+DH
    R=R+DR
    XL=XL+SQRT(DR*DR+DH+DH)
    PHI=PHI+DPHI/2.
    ANFAC=1.+COS(PHI)*XNI
    RFAC=(1.+XNI)*RHO2/R2-XNI*ALOG(R/R2)
    RHO=R*RFAC/ANFAC
    WRITE(6,101) PHI,RHO,H,R,XL
    IF(PHI.GT.3.3) GO TO 2
    GO TO 4
    END
```

Figure H-2 illustrates the values of R_1 and H_{max} found from R_2 = 13 m, 12 or 16 coils, and different values of ρ_2 between 7.0 m and 8.5 m. This figure can also be used to find another value of R_2 if R_1 and H_{max} are fixed. For example, suppose that it were desired that R_1 = 3.17 m, H_{max} = 7.49 m. One then draws on Fig. H-2 the line H_{max}/R_1 = 7.49/3.17. That line will intersect the 12 coil curve at R_1 = 3.04, H_{max} = 7.21. R_2 is then given by 13 m x 3.17/3.04 = 13.56 m.

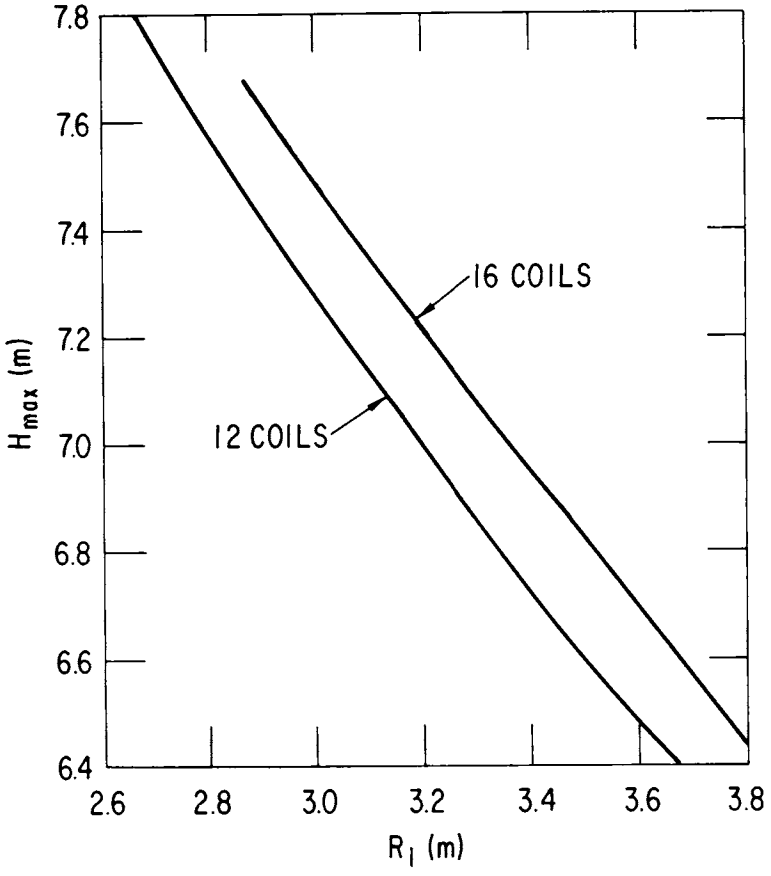

Figure H-2. H_{max} as a function of R_1 for R_2 = 13 m and for 12 or 16 coils.

H.2.3 Coil Cross Sections

The expressions for the TF coil cross sections have also been modified in the magnet model. The total cross section A is given by:

$$A = A_{Cu} + A_{ss} + A_{He} + A_{Vc} \tag{7}$$

where all cross sections are in m^2, and A_{Cu}, A_{ss}, A_{He}, and A_{Vc} are respectively the cross sectional area of copper and superconductor, stainless steel support, helium and insulator, and vacuum space and can. References (1) and (2) describe the calculation of A_{Cu} and A_{ss}. A_{He} and A_{Vc} are estimated from the expressions:

$$A_{He} = 0.64\ A_{Cu} + 0.20\ A_{ss} \tag{8}$$

$$A_{Vc} = 0.60\ (A_{Cu} + A_{ss} + A_{He})^{1/2} \tag{9}$$

H.2.4 Stored Energy

Finally, the expression for stored energy E in the magnet model (Eq. (11) in reference (1), Eq. (34) in reference (2)) should be replaced by:

$$E = 2\pi B_{max}^2 (R_1 + t/2)^2 [R_2 (H_{R_1} R_2 - 2R_1\Omega) \ln (R_2/R_1) + (R_2^2 - R_1^2) \Omega - (3R_2^2 - 4R_2R_1 + R_1^2) H_{R_1}/2]/\mu_o(R_2-R_1)^2 \quad (10)$$

where B_{max} is the peak toroidal field, t is the coil thickness,

$\Omega = H_{max} [1 + (1 - H_{R_1}/H_{max})^{1/2}]$; μ_o is the free space permeability and all other parameters are defined in Fig. H.1.

H.3 MODEL FOR OH COIL LOCATION AND CURRENT

STARFIRE is a steady state, rf-driven tokamak, without the large OH solenoid characteristic of a pulsed tokamak reactor. However, pulsed operation was considered as an option, and an initial design was developed for an OH coil system similar to those of the ANL experimental power reactor (EPR) designs.[4-5] The system consists of a central solenoid (#1), three coils outward and upward from the top of the solenoid (#2,3,4), a coil above the top of the TF coils, (#5) and a coil outboard of the TF coils (#6), plus similar coils below the midplane of the reactor. The solenoid supplies the required flux change linked by the plasma, and the other coils cancel any field in the plasma region due to the solenoid. General algorithms for the location and current of such coils were developed, and appear here for possible future use on pulsed systems.

H.3.1 The OH Solenoid

The total flux swing required of the OH coil system, $\Delta\phi$, is determined from the inductive volt seconds, the resistive volt seconds, and the expected contribution of the EF coil system. The outer radius of the OH solenoid r_2, is determined by the TF coil design. It is generally equal to the inner radius of the central support cylinder; but with a reduced OH solenoid current density (representing allowance for additional structure for the transfer of force through the OH solenoid), it can be taken as the outer radius of the support cylinder.[5]

The solenoid thickness, Δr, is given by:

$$\Delta r = \phi/\mu_o \pi J[r_2^2 - r_2\ \Delta r + (\Delta r)^2/3] \tag{11}$$

where J is the specified current density and generally the maximum flux $\phi = \Delta\phi/2$. Eq. (11) must be solved iteratively; for the STARFIRE design, the calculation converged at about one order of magnitude per iteration. Peak field in the solenoid, B_{OH}, is given by:

$$B_{OH} = \mu_o J \Delta r \tag{12}$$

Finally the solenoid half-height, h_1, is taken to be

$$h_1 = H_{max} + t/2 \tag{13}$$

with H_{max} and t as shown in Fig. H-1.

H.3.2 Locations of Other OH Coils

Coils #2, 3, and 4 are each taken to be out a distance Δr, as found by Eq. (11), and up a distance 0.3 m from the previous coil. Coil #5 is located at

$$r_c = R_{H_{max}} \tag{14}$$

$$Z_c = H_{max} + t/2 + 1.15\ \text{m}; \tag{15}$$

and coil #6 is located at

$$r_c = R_2 + t/2 + 0.5\ \text{m} \tag{16}$$

$$Z_c = (\rho_2 + t/2)\ \tan\Theta \tag{17}$$

$$\Theta = \cos^{-1}\left([1 + 1.5\ \text{m}/(\rho_2 + t/2)]^{-1}\right) \tag{18}$$

where H_{max}, $R_{H_{max}}$, R_2, ρ_2, and t are as given in Fig. H-1.

H.3.3 Currents

The current I_1 in coil #1 is given by:

$$I_1 = Jh_1 \Delta r. \tag{19}$$

We take $I_2 = I_3 = I_4$; thus there are three unknown currents, I_2, I_5, and I_6 to be found. We determine them from the condition that the combined field from all OH coils be zero in the midplane at $r = R$, the major radius, and at $r = R \pm a$, the outer and inner radius of the plasma.

Coils #2 through 6 are treated as filaments. Thus the field at point $(r, 0)$ due to the coils at $(r_c, \pm Z_c)$ with current I is given by:

$$B = 2\mu_o \, kI[K + \left\{ (r + r_c) \, k^2/2r - 1 \right\} E/(1-k^2)]/4\pi\sqrt{r \, r_c} \tag{20}$$

where $k^2 = 4 \, rr_c/[(r + r_c)^2 + Z^2]$ and K and E are respectively the complete elliptic integrals of the first and second kind.

The OH solenoid is treated as a thin walled solenoid of height 2h and mean radius $b = r_2 - \Delta r/2$. The field at (r,0) due to the solenoid is given by[6]

$$B = -2\mu_o J\Delta r\Omega/4\pi \tag{21}$$

where the solid angle Ω is given by:

$$\Omega = 2\pi - 4[u^2 + b^2 + 2ub \sin\alpha]^{-1/2} \; [(u + b\sin\alpha)K - -2 \, bD \sin\alpha] \tag{22}$$

and

$$u^2 = r^2 + h^2$$

$$\cos\alpha = h/u$$

$$k^2 = 4 \, ub \sin\alpha/(u^2 + b^2 + 2 \, ub \sin\alpha)$$

$$D = (K - E)/k^2$$

Calculations with the magnet design program GFUN[7,8] confirmed the positions and currents calculated with this OH Coil model.

H.4 CONTROL OF TOROIDAL FIELD RIPPLE THROUGH TF COIL GEOMETRY AND FERRITIC IRON.

In general, it has been thought desirable to reduce ripple as low as possible. However, in Chapter 6 it is shown that a suitable amount of ripple may be desirable to produce a thermally stable plasma burn. In this section the dependence of ripple on TF coil outer radius and on the number of coils is described, along with the possibilities for reducing ripple with ferritic iron.

H.4.1 Ripple Variation with TF Coil Outer Radius and Number of Coils

Figure H-3 shows the calculated mid-plane field ripple as a function of radial position for the STARFIRE TF coil system (R_1 = 3.17 m, R_2 = 13 m, N_c = 12 coils), and also values obtained from GFUN[7,8] calculations for TF coil systems approximated by the methods of Sec. H.2 with R_1 = 3.04 m; R_2 = 12.5 m, and N_c = 12, 10, and 8 coils. As expected the ripple decreases as the number of coils increases. However, the radial variation of ripple increases as the number of coils increases. The ripple at r = 7 m and r = 9 m was fitted to the following expressions:

$$\begin{aligned} \text{12 Coils:}\quad & \delta B/B = \pm\, 0.1429\% \exp\left\{1.4319\ (r - 7)\right\} \\ \text{10 Coils:}\quad & \delta B/B = \pm\, 0.4471\% \exp\left\{1.1816\ (r - 7)\right\} \\ \text{8 Coils:}\quad & \delta B/B = \pm\, 1.405\% \exp\left\{0.9321\ (r - 7)\right\} \end{aligned} \tag{23}$$

with r in meters.

H.4.2 Ripple Control with Ferritic Iron

It has been shown[5,9] that incorporating some sections of ferritic iron in the radiation shield of a tokamak reactor is an effective way of reducing the toroidal field ripple.

Calculations for two preliminary STARFIRE designs, one with R_1 = 2.785 m and R_2 = 14 m, the other with R_1 = 3.04 m and R = 12.5 m, were carried out with the GFUN[7,8] program. In each case the number of coils and the amount of iron were varied. The iron is taken to be 12 m in total height, rectangular in cross section, and curved to fit just inboard of the outboard leg of each TF coil. Tables H-1 and H-2 show the field ripple in each case; the peak-to-mean ripple (half the peak-to-peak) is given.

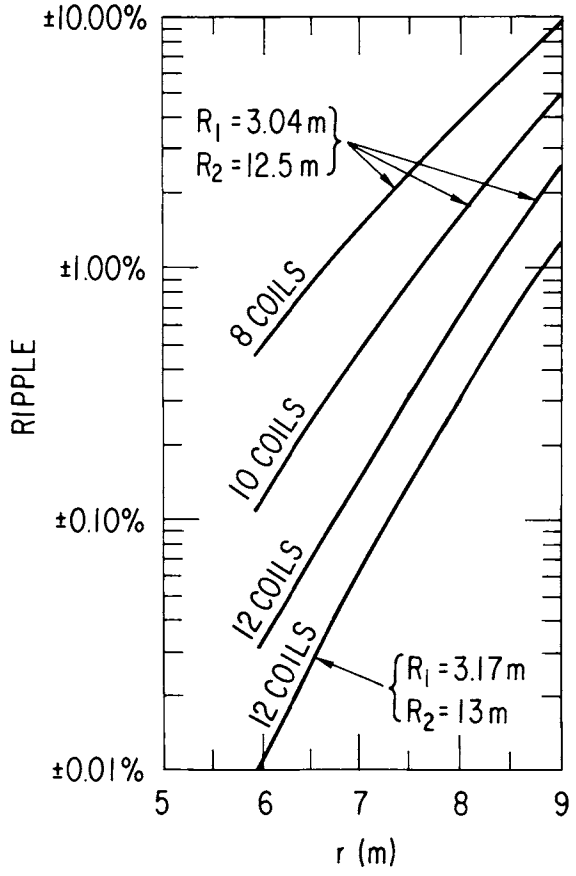

Figure H-3. Field ripple (peak to mean) for STARFIRE and for design variations.

The final decision was to choose R_2 = 13 m and no iron rather than R_2 = 12.5 m with iron or R_2 = 14 m with iron and fewer coils, primarily on the basis of the large amount of space so much iron would occupy.

H.5 ELECTROMAGNETIC ANALYSIS OF A HOLLOW LIMITER DESIGN

Section 8.4.6 described the electromagnetic effects on the solid limiter which has been incorporated into the STARFIRE design. This section describes the analysis of an earlier, hollow design It is included here both because of the results, which were in part responsible for the change to a solid limiter, and because different analytical methods have been used here than in Sec. 8.4.6, which might be applicable in future design studies.

Table H-1. TF Coil Ripple Reduction with Ferritic Iron.
R_1 = 2.785 m, R_2 = 14 m

Number of Coils	Iron dimensions (m x m x m)	Total mass of iron (x 10^3 metric tons)	Field Ripple
12	none	0	± 0.62%
	1.46 x 1.46 x 12	2.39	± 0.13%
	1.61 x 1.46 x 12	2.64	± 0.04%
	1.86 x 1.46 x 12	3.05	∓ 0.23%
10	none	0	± 1.50%
	1.74 x 1.74 x 12	2.83	± 0.48%
	1.98 x 1.74 x 12	3.22	± 0.20%
	2.57 x 1.74 x 12	4.19	∓ 1.16%
8	none	0	± 3.65%
	2.42 x 2.18 x 12	3.95	± 1.64%
	3.04 x 2.18 x 12	4.96	∓ 2.54%

Table H-2. TF Coil Ripple Reduction with Ferritic Iron.
12 Coils, R_1 = 3.04 m, R_2 = 12.5 m

Iron dimensions (m x m x m)	Total mass of Iron (x 10^3 metric tons)	Field Ripple
none	0	± 2.32%
0.5 x 1.44 x 12	0.81	± 1.92%
1.0 x 1.44 x 12	1.62	± 1.13%
1.5 x 1.44 x 12	2.43	∓ 0.63%

H.5.1 Introduction

In a plasma disruption, the plasma current rapidly will transfer to the first wall and blanket. Since the limiter lies within the first wall, current will also be induced in the limiter, in an attempt to maintain the magnetic flux within the conducting limiter. One effect of this induced current will be a magnetic pressure which attempts to expand the limiter. In addition a torque results from the interaction of the induced current with the toroidal field.

Actually two modes of induced current might be expected. In one, which might be called the limiter mode, the current flows toroidally in one direction on one side of the limiter and back on the other. In the other, called the support mode, the current flows one direction in the limiter, crosses at each end of the support, and returns across the support itself.

Because the hollow limiter is poorly represented by simple models such as a solenoid or a filament, a more complex analysis had to be carried out. For this purpose, the eddy-current analysis program EDDYNET[10,11] was used, with the limiter treated as a thin conducting shell.

The limiter is described briefly in Sec. H.5.2. In Sec. H.5.3 the program EDDYNET is described, along with the method in which the limiter was modeled for the computation. The calculated forces and torques are presented in Sec. H-5.4.

H.5.2 The Hollow Limiter

The limiter runs toroidally around the outboard midplane of the tokamak, extending inward from the first wall as described in Sec. 8.4. It is divided into 0.5 m long sections; a single section is analyzed here. The full height is 1.0 m, and the limiter extends about 0.28 m in from the first wall. A simplified cross section of the limiter appears in Fig. H-4 a. It is made of Ta-15W and consists of two layers 0.0015 m thick with cooling passages between. In the analysis, it is treated as a single layer 0.003 m thick.

H.5.3 Computation via EDDYNET

The computation has been carried out with the program EDDYNET, in which the conducting surface is represented by a network of current-carrying line elements. Consequently the solution of Maxwell's field equations reduces to the simpler problem of solving Kirchhoff's circuit rules.

The limiter was modeled using the "shell" option of EDDYNET. A quadrilateral (in this case rectangular) mesh represented one quadrant of a limiter section with the remainder included by symmetry. (Actually, in terms of the available symmetry codes, it is one octant of two limiter sections, but as the two are 8 m apart, they do not interact.) The height Z was specified as a function of radial coordinate y, as shown in Fig. H-4 b. The mesh contains 9 x 4 = 36 loops, as shown in Fig. H-4 c. The four on the left (Region OA)

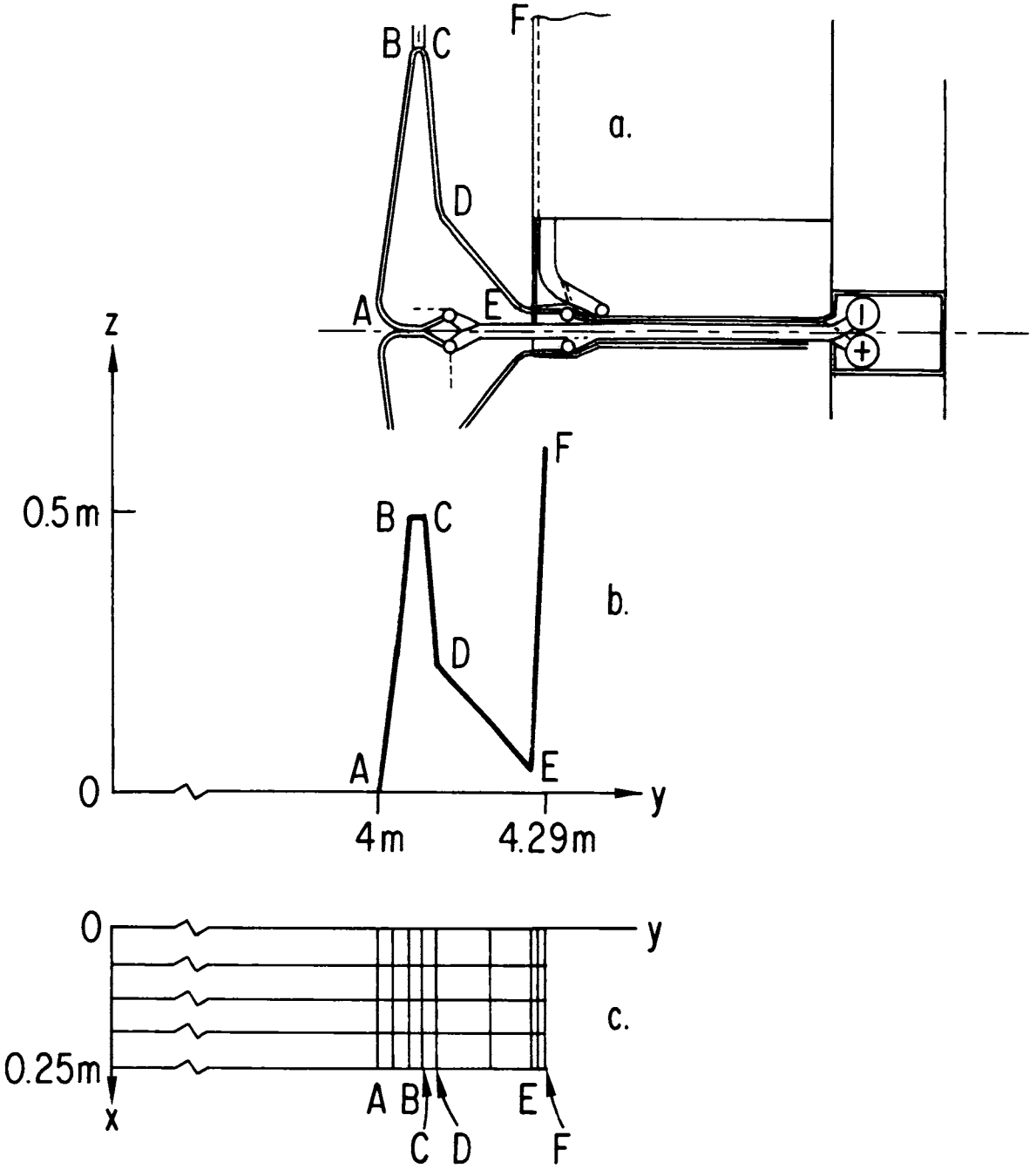

Figure H-4. Modeling the hollow limiter for the program EDDYNET

a. Cross-section of the limiter design.

b. Profile of the limiter model in the y-z plane. OA lies in the plasma region; ABCDE represents the wall of the hollow limiter; EF represents the adjacent portion of the first wall.

c. Rectangular mesh for eddy current calculation, projected on the x-y plane.

represent the plasma region, with a very high resistivity. The eight on the right (Region EF) represent the first wall, with effective resistivity 0.34×10^{-8} Ωm. The remainder represent the limiter (Region ABCDE), with resistivity 14×10^{-8} Ωm. The thickness is taken to be 0.003 m everywhere.

The poloidal field from the plasma is taken to be 1 T at the limiter initially, uniform and in the Z direction. It is taken to decay instantaneously or exponentially with a time constant τ_o.

H.5.4 Results

Seven cases were considered, for which parameters are summarized in Table H-3. In the first three, the plasma current was taken to disappear instantaneously. In the others, it was taken to decay exponentially with a time constant τ_o of 1 ms, 10 ms, or 100 ms. The cases differ also in the size of Δt, the time step used in iterating through time. The number of time steps N_t also appears in Table H-3.

Table H-3. Cases Considered

Case	τ_o (ms)	Δt (ms)	N_t
1	0	0.01	659
2	0	0.02	659
3	0	0.10	659
4	1	0.01	653
5	10	0.01	653
6	10	0.02	791
7	100	0.02	653

For each case, the total power dissipated was determined each time step. The normal component of field through each loop of the network, all the loop currents, and all the line currents were also determined. The results for cases 3, 4, 5, and 7 appear below; the other cases were compared with these to confirm that the results do not depend on the size of Δt.

H.5.4.1 Power

The power dissipated in the limiter after an instantaneous plasma current disruption can be viewed as a sum over the normal modes of the limiter. After a sufficiently long time, the power will decay with a characteristic time of one-half the longest time constant. When that mode is subtracted from the total power, the difference will decay with a characteristic time of one-half the next longest time constant. If sufficiently precise values for power are available, the subtraction can be repeated several times. The power was fit in this way to four modes.

$$P = \sum_{n=1}^{4} A_n \exp(-2t/\tau_n). \tag{24}$$

Characteristics of the four modes appear in Table H-4.

Table H-4 First Four Eddy Current Modes of the Limiter

Mode	Name	A_n(MW)	$2/\tau_n$(ms^{-1})	τ_n(ms)	$A_n\tau_n$(Joule)	Dominant after
1	"First Wall"	0.000 450	0.0333	60.	27	60 ms
2	"Support"	2.170	0.9317	2.15	4700	4 ms
3	"Limiter"	3.589	2.1883	0.91	3300	1.4 ms
4	Unnamed	7.358	6.0616	0.33	2400	0.5 ms

The quantity $A_n \tau_n$ is a measure of the energy associated with each mode. The "support" mode and "limiter" mode are seen to be dominant. The "first wall" mode enters only because the network mesh generator prohibits the first wall from being truly vertical. Although it has the longest time constant, it has a very small $A_n \tau_n$, and is not expected to distort the results significantly.

H.5.4.2 Line Currents, Forces, and Torques associated with Eddy Current Modes

According to the last column in Table H-4, the first-wall mode dominates after 60 ms. Thus the line-current pattern at 60 ms is that of the first-wall mode. Similarly, the pattern at 4 ms is a combination of the first-wall and support modes and that at 2 ms a combination of the first three modes. Denoting by I_n the current associated with the mode n at time t = 0, we can write

$$I_1 = I(60\ \text{ms})\ \exp\ (60\ \text{ms}/\tau_1)$$

$$I_2 = \exp(4\ \text{ms}/\tau_2)\ [I(4\ \text{ms}) - I_1\ \exp(-4\ \text{ms}/\tau_1)] \tag{25}$$

$$I_3 = \exp(2\ \text{ms}/\tau_3)[I(2\ \text{ms}) - I_1\ \exp(-2\ \text{ms}/\tau_1) - I_2\ \exp(-2\ \text{ms}/\tau_2)]$$

Figure H-5 indicates the pattern of the first three modes by showing the lines in which $I_1 > 3$ kA, $I_2 > 50$ kA, and $I_3 > 20$ kA, although of course, all modes have some current in almost all lines. The patterns in Fig. H-5 justify the names "First Wall Mode", "Support Mode", and "Limiter Mode."

The torque, N, on the limiter is due to the force in the vertical direction, F_Z, which in turn is due to the interaction of the magnetic field in the toroidal (X) direction and the current in the radial (Y) direction.

$$F_Z = -\int J_y B_x dV = B_T \sum I_y \Delta y \tag{26}$$

$$N = B_T \sum x I_y \Delta y \tag{27}$$

The forces and torques associated with the support and limiter modes at t = 0 for an instantaneous plasma disruption are shown in Table H-5. The toroidal field at the limiter is 4.54 T.

Table H-5. Forces and Torques of Support and Limiter Modes

Mode	$F_Z(10^3 Nt)$	$N(10^3 Nt\cdot m)$	$N/F_Z(m)$
Support	418.3	133.3	0.319
Limiter	110.4	51.3	0.465

For an exponential decay of plasma current with time constant τ_o, the limiter mode with time constant τ will experience a torque

$$N = \frac{N(\tau_o = 0)}{1 - \tau_o/\tau}\ [\exp(-t/\tau) - \exp(-\tau/\tau_o)]\ . \tag{28}$$

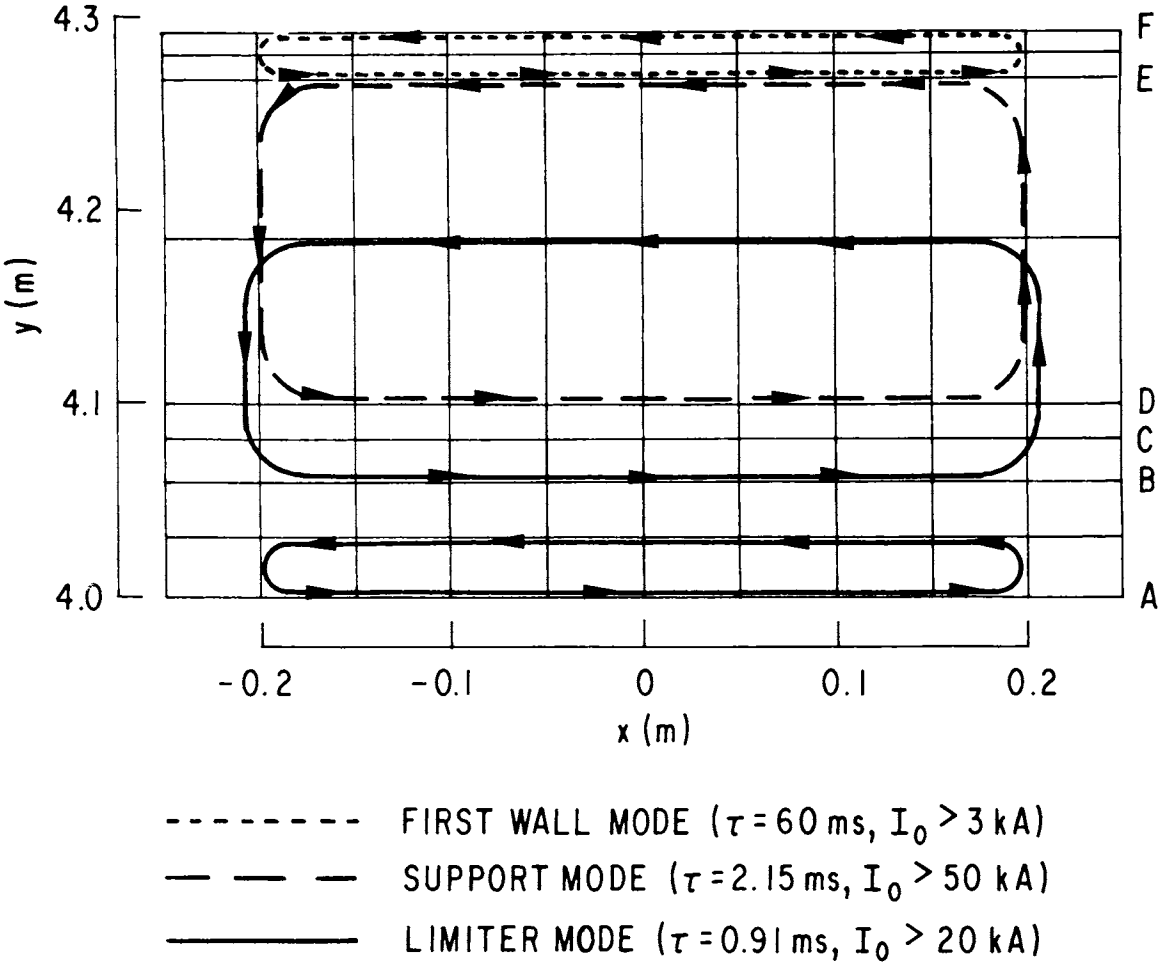

Figure H-5. Eddy current paths of normal modes in limiter projected on x-y plane. Positions A,B,C,D,E and F are defined in Fig. H-4.

For a given plasma disruption time τ_o, the torque as a function of time t can be calculated from Eq. (28) for both the support mode (τ = 2.15 ms) and the limiter mode (τ = 0.91 ms). These torques appear in Table H-6 for the time t which maximizes the sum of the two torques.

Table H-6. Peak Torques for Different Plasma Decay Time Constants τ_o, calculated from values with $\tau_o = 0$

τ_o(ms)	t(ms)	$N_{Support}$(10^3 N·m)	$N_{Limiter}$(10^3 N·m)	$N_{Support} + N_{Limiter}$
0	0	133.3	51.3	184.6
1	1.5	68.4	15.1	83.5
2	1.8	50.4	11.5	61.9
5	3	30.3	5.8	36.1
10	4	18.7	3.4	22.1
20	5	10.9	1.9	12.8
50	7	5.0	0.8	5.8
100	8	2.6	0.4	3.0

The torques in Table H-6 are calculated from Case 3 of Table H-3, with $\tau_o = 0$ ms. However, peak torques can also be calculated directly from computations with $\tau_o = 1$ ms, 10 ms, 100 ms (Cases 4, 5, and 7 of Table H-3). These torques appear in Table H-7 along with the force and the equivalent lever arm. Figure H-6 compares the results of the two methods of analysis. The torques calculated directly are somewhat higher, especially for $\tau_o = 1$ ms, because the direct calculation implicitly includes other modes in addition to the support and limiter modes.

Table H-7. Peak forces and torques from Computation with $\tau_o > 0$.

τ_o(ms)	t(ms)	F(10^3 N)	N(10^3 N·m)	N/F(m)
1	1	252.1	93.3	0.37
10	4	66.4	23.2	0.35
100	8	9.1	3.2	0.35

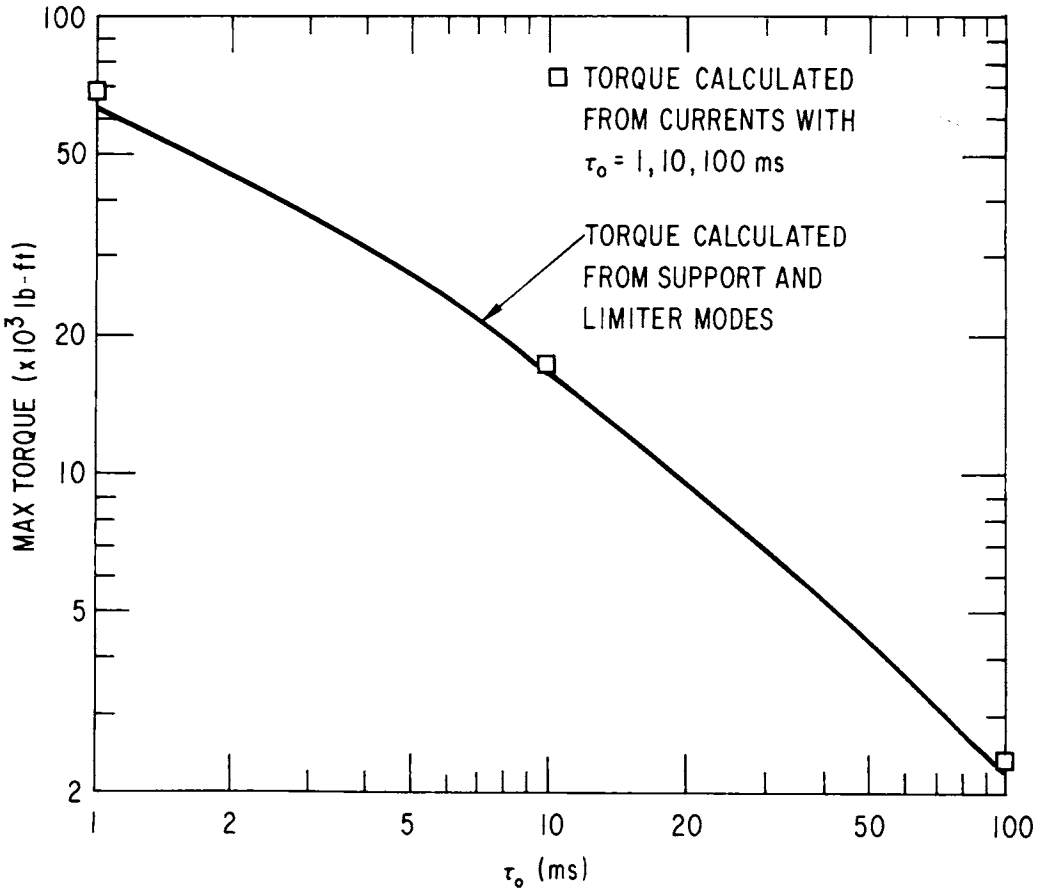

Figure H-6. Peak torque on the hollow limiter as a function of plasma discharge time τ_o.

References

1. L. R. Turner and M. A. Abdou, "Computational Model for Superconducting Toroidal-Field Magnets for a Tokamak Reactor," Proc. 7th Symposium on Engineering Problems of Fusion Research, Knoxville (1977) pp. 762-766.

2. L. R. Turner and M. A. Abdou, "Computational Model for Superconducting Toroidal-Field Magnets for a Tokamak Reactor," ANL/FPP/TM-88 (Argonne National Laboratory, 1977).

3. R. W. Moses, Jr. and W. C. Young, "Analytic Expressions for Magnetic Forces on Sectored Toroidal Coils," Proc. 6th Symposium on Engineering Problems of Fusion Research, San Diego (1975) pp. 917-921.

4. L. R. Turner, S-T. Wang, J. R. Purcell, "Superconducting Ohmic-Heating Coils for the Argonne TEPR Design Study," Proc. 6th Symposium on Engineering Problems of Fusion Research, San Diego (1975) pp. 1089-1092.

5. L. R. Turner, S-T. Wang, S. H. Kim, Y. C. Huang, and R. P. Smith, "Superconducting Magnet Systems for the ANL EPR Design," Proc. 7th Symposium on Engineering Problems of Fusion Research, Knoxville (1977) pp. 746-750.

6. G. E. Owen, Introduction to Electromagnetic Theory, Allyn and Bacon, Boston (1963) p. 203.

7. M. J. Newman, C. W. Trowbridge, and L. R. Turner, "GFUN: An Interactive Program as an Aid to Magnet Design," Proc 4th International Conference on Magnet Technology, Brookhaven (1972) pp. 617-626.

8. A. G. Armstrong et al., GFUN3D Users Guide, Rutherford Laboratory, RL-76-029-A (November, 1976).

9. L. R. Turner, S-T. Wang, and H. C. Stevens, "Iron Shielding to Decrease Toroidal Field Ripple in a Tokamak Reactor," Proc. 3rd Topical Meeting on the Technology of Controlled Nuclear Fusion, Santa Fe (1978) pp. 883-889.

10. L. R. Turner, "An Integral Equation Approach to Eddy-Current Calculations, IEEE Trans. Mag., MAG-13, 1119-1122 (1978).

11. L. R. Turner and R. J. Lari, "Eddy Current Calculations with the Program EDDYNET, incorporating Loop Currents and a Quadrilateral Mesh," INTERMAG Conference Boston (April, 1980).

Table of Contents

		Page
I.1	INTRODUCTION	I-1
I.2	PARTICLE BALANCE EQUATIONS	I-4
I.3	ENERGY BALANCE EQUATIONS	I-7
I.4	MODEL VERIFICATION	I-13
I.5	CONCLUSIONS	I-16

List of Figures

Number		Page
I-1	Relative positions of the resonance regions in a typical tokamak plasma. For larger systems such as STARFIRE the separation between the resonances is reduced, and, in fact, the two resonance regions may actually merge	I-1
I-2	Illustration of two different loss models considered in the code. For the $\vec{E}_{\nabla B} \times \vec{B}$ case the loss mechanism is the outward drift that particles experience in a simple torus, while for the empirical case the loss mechanism is scaled to match experimental observations	I-2
I-3	Line radiation, three body recombination, and collisional excitation power loss for oxygen, as a function of electron temperature	I-11
I-4	Time history of key plasma parameters during breakdown for the ISX experiment, as calculated using the $\vec{E}_{\nabla B} \times \vec{B}$ loss model	I-15
I-5	Time history of key plasma parameters during breakdown for the ISX experiment, as calculated using the empirical loss model	I-15

List of Tables

Number		Page
I-1	Constants in Rate Coefficients	I-6

I.1. INTRODUCTION

In order to better understand the behavior of the plasma during the electron cyclotron resonance heating (ECRH) breakdown period, and to better quantify the requirements of the vacuum chamber pumpdown, back fill, and the ECRH power supply system, a zero dimensional model of the breakdown process has been developed. This model has been used to explore possible options and alternatives, and it indicates that ECRH breakdown imposes only minimal constraints on the plasma vacuum system and power supplies. Especially encouraging is the fact that the plasma parameters resulting from the breakdown phase are compatible with the use of lower hybrid heating for the remainder of the plasma preheat. An ECRH breakdown system is thus viable in STARFIRE.

The breakdown model consists of a global balance for particles (ions, electrons, and impurities), with separate energy balances for the background plasma and the two resonance heated regions (see Fig. I-1), the electron

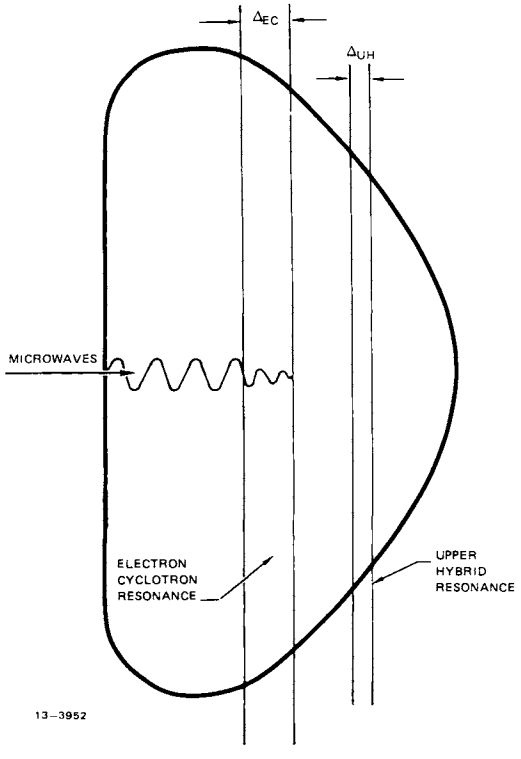

Figure I-1. Relative positions of the resonance regions in a typical tokamak plasma. For larger systems such as STARFIRE the separation between the resonances is reduced, and, in fact, the two resonance regions may actually merge.

cyclotron resonance (ECR) and the upper hybrid resonance (UHR). Energy input is in the form of rf power that is systematically distributed over the volumes defined by the resonance regions, and losses are due to leakage, neutral ionization, and impurity line and recombination radiation where oxygen is taken to be the impurity. The balance equations are formulated as a system of coupled, first order, ordinary differential equations, which are time-integrated using a fourth order Runge-Kutta algorithm with a variable timestep.

The overall structure of the code is based upon ECRH preionization experiments[1] which have resulted in a nearly uniform plasma density with a strongly heated resonance layer ($T_e \sim 60$ eV) and a colder background plasma ($T_e \sim 10$ eV). Initially the resonance layer is at the position of the electron cyclotron resonance; however, as the electron density builds, the heated region begins to move radially outward, finally reaching an equilibrium position at the upper hybrid resonance, as shown in Fig. I-2. A detailed analysis of this transition is beyond the scope of the

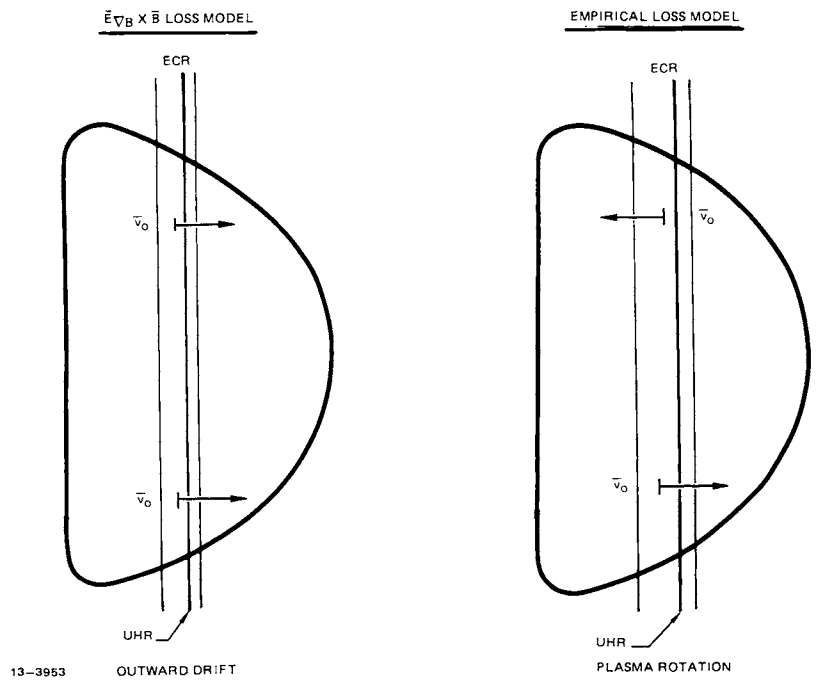

Figure I-2. Illustration of two different loss models considered in the code. For the $\vec{E}_{\nabla B} \times \vec{B}$ case the loss mechanism is the outward drift that particles experience in a simple torus, while for the empirical case the loss mechanism is scaled to match experimental observations.

present study, but the code is thought to provide a reasonable representation of the actual absorption physics due to the following method of calculating the rf energy deposition.

Initially, all of the injected rf power is uniformly distributed in the volume defined by the ECR (see Eq. I-26 and Fig. I-1). This description is retained until the plasma density has built up to the point where either the UHR layer has separated from the ECR layer or the absorbed rf power density at the UHR (see Eq. I-15) is greater than that at the ECR. From this point on the UH absorption is increased in proportion to the square of the density until it reaches 75% of the total rf power. (Typically the code is set up such that the UH absorption reaches 75% of its maximum at a density of $2 \times 10^{18}\ m^{-3}$). Beyond this point the 75/25 split between the UH/EC layers is maintained, and the code is allowed to continue until a steady-state solution has been reached.

Because the plasma density associated with this steady-state solution is highly dependent upon the recycling of leaking particles back into the plasma, a comment about the treatment of neutral recycling in the code is appropriate. Recycling is a complex, little understood process that depends on several factors including the amount of hydrogen initially contained in the wall, the fraction of the particles reflected by the wall, the surface area of the wall, and the cross section for gas release from the wall.[2] Initially only 50% of the leaking particles are expected to recycle; however, this fraction rapidly increases to $\sim$ 100% as the wall becomes saturated. Since the amount of hydrogen trapped in the wall at the beginning of each burn cycle is unknown, the actual recycling fraction cannot be calculated. Fortunately the trapped particle fraction can easily be made up through gas puffing; therefore 100% recycling has been used in the present calculations. This means that the final plasma density is comparable to the initial neutral density increased by the ratio of the total vacuum volume to the plasma volume.

The details of the balance equations as formulated in the code are presented in the following discussion. Units are MKS with temperatures in eV unless otherwise noted.

I.2. PARTICLE BALANCE EQUATIONS

The neutral, ion, and electron densities are given by the following equations:

$$\frac{d\,n_n}{dt} = \frac{V_P}{V_T}\left\{\frac{n_i}{\tau_C} - f_H\, f_{SH}\, n_e\, n_n\, \langle\sigma v\rangle_{eH} - f_W\, f_{SW}\, n_e\, n_n\, \langle\sigma v\rangle_{eW} - f_C\, n_e\, n_n\, \langle\sigma v\rangle_{eC}\right\} + \frac{S_o}{V_T} \tag{I-1}$$

$$\frac{d\,n_i}{dt} = f_H\, f_{SH}\, n_e\, n_n\, \langle\sigma v\rangle_{eH} + f_W\, f_{SW}\, n_e\, n_n\, \langle\sigma v\rangle_{eW} + f_C\, n_e\, n_n\, \langle\sigma v\rangle_{eC} - \frac{n_i}{\tau_C} \tag{I-2}$$

$$n_e = n_i + \sum_{j=1}^{8} Z_j\, O_j \tag{I-3}$$

In these equations V_P and V_T are respectively the volumes of the plasma and the vacuum chamber; f_H, f_W, f_C are the fractional volumes of the UHR layer, the ECR layer, and the remaining plasma volume (see Eqs. I-25, I-26); τ_C is the cold particle loss rate; f_{SH} and f_{SW} are the fractional increases in the ionization rates of the UHR and ECR layers, respectively, due to interactions during slow down; $\langle\sigma v\rangle_{eH,W,C}$ are the ionization rate coefficients in each of the three regions of the plasma; S_o is the external source of neutral particles; and the electron density is specified such that charge neutrality is maintained.

A similar group of equations is obtained for the impurity ionization states, normally taken to be oxygen, viz:

$$\frac{d\,O_n}{dt} = \left\{\frac{V_P}{V_T}\sum_{j=1}^{8}\frac{O_j}{\tau_C} - f_H\, f_{SH}\, n_e\, O_n\, \langle\sigma v\rangle^{H}_{O,1} - f_W\, f_{SW}\, O_n\, \langle\sigma v\rangle^{W}_{O,1} - f_C\, n_e\, O_n\, \langle\sigma v\rangle^{C}_{O,1}\right\} \tag{I-4}$$

$$
\begin{aligned}
\frac{d\,O_i}{dt} = {} & f_H\, f_{SH}\, n_e \Big\{ O_{i-1} \langle\sigma v\rangle^{H}_{i-1,\ i} + O_{i+1} \left(\alpha^{H}_i + \gamma^{H}_i\, n_e \right) \\
& \qquad - O_i \left(\langle\sigma v\rangle^{H}_{i,\ i+1} + \alpha^{H}_{i-1} + \gamma^{H}_{i-1}\, n_e \right) \Big\} \\
& + f_W\, f_{SH}\, n_e \Big\{ O_{i-1} \langle\sigma v\rangle^{W}_{i-1,\ i} + O_{i+1} \left(\alpha^{W}_i + \gamma^{W}_i\, n_e \right) \\
& \qquad - O_i \left(\langle\sigma v\rangle^{W}_{i,\ i+1} + \alpha^{W}_{i-1} + \gamma^{W}_{i-1}\, n_e \right) \Big\} \\
& + f_C\, n_e \Big\{ O_{i-1} \langle\sigma v\rangle^{C}_{i-1,\ i} + O_{i+1} \left(\alpha^{C}_i + \gamma^{C}_i\, n_e \right) \\
& \qquad - O_i \left(\langle\sigma v\rangle^{C}_{i,\ i+1} + \alpha^{C}_{i-1} + \gamma^{C}_{i-1}\, n_e \right) \Big\} \\
& - \frac{O_i}{\tau_C}
\end{aligned}
\tag{I-5}
$$

Here O_n is the density of neutral oxygen; O_i the density of the i-th ionization state; $\langle\sigma v\rangle^{H,W,C}_{i\ i+1}$ are the ionization rate coefficients for the i-th state in each of the three regions; and $\alpha_i^{H,W,C}$ and $\gamma_i^{H,W,C}$ are the radiative and collisional recombination rates for interactions resulting in an i-th state ion in each region. These rates are calculated from the following relations given by Düchs and Griem:[3]

$$\langle\sigma v\rangle_{i,\ i+1} = S_i \left(\frac{T_e}{\chi_i}\right)^{\frac{1}{2}} \frac{\exp\,(-\chi_i/T_e)}{(1 + T_e/\chi_i)} \tag{I-6}$$

$$\alpha_i = a_i\ (\chi_i/T_e)^{3/2} \tag{I-7}$$

$$\gamma_i = C_i\ (\chi_i/T_e). \tag{I-8}$$

Where T_e is the electron temperature in the respective regions. Values for the coefficients S_i, a_i, C_i, and the ionization potential χ_i of the i-th state of oxygen are given in Table I-1.[3]

Table I-1. Constants in Rate Coefficients

	O_1	O_2	O_3	O_4	O_5	O_6	O_7
χ_i (eV)	30.0	47.3	68.7	104	128	739	871
S_i (m^3 sec^{-1})	1.0(-13)	1.6(-14)	3.8(-15)	2.0(-15)	6.1(-16)	3.8(-16)	1.3(-16)
a_i (m^3 sec^{-1})	3.5(-20)	9.2(-20)	1.6(-19)	2.2(-19)	3.4(-19)	1.0(-19)	1.8(-19)
c_i (m^6 sec^{-1})	9.1(-42)	8.8(-42)	8.3(-42)	6.2(-42)	7.1(-42)	2.6(-43)	2.9(-43)

In this table the numbers in parentheses indicate the power of 10 that is associated with the coefficient, and constants for ground state oxygen are not given because α_o and γ_o are small, while values of χ_{10} and $\langle\sigma v\rangle_{0,1}$ may be taken from the corresponding values of hydrogen. The $\langle\sigma v\rangle_{0,1}$ for hydrogen is simply multiplied by the number of equivalent electrons in the oxygen ionic configuration.

In Eqs. I-1 thru I-5, particles are assumed to be exchanged between layers, but they are only lost from the cold region at a rate given by τ_C. Two separate models have been developed for calculating this loss rate, and they are illustrated schematically in Fig. I-2. The first is obtained by considering the outward $\vec{E}_{\nabla B} \times \vec{B}$ drift of particles in a simple torus, where $\vec{E}_{\nabla B}$ is the electric field set up by the gradient drifts of the various species. The vertical potential is thought to build up to a level where it is of the order of the average energy of the hot electrons in the resonance layers. The confinement time is then found by dividing the corresponding $\vec{E}_{\nabla B} \times \vec{B}$ drift velocity into the equivalent circular radius of the plasma, $\bar{a}$, and is:

$$\tau_C = \tau_{EXB} = 1.0 \frac{\bar{a}^2 B}{T_H} \qquad \text{(I-9)}$$

This simple description of the plasma loss mechanism during breakdown predicts a much faster plasma build up than has been observed in ECRH preionization experiments on ISX. For this reason an empirical confinement scaling has also been developed which compares more favorably with the ISX results. This has been accomplished by combining an anomalous loss term, which is calculated from the flute growth rate, with an empirical scaling, similar to Alcator confinement, that has been adjusted to match the ISX results. The confinement time for this model is then:

$$\tau_C = \tau_{EMP} = 6.5 \times 10^{-5} \left(\frac{\bar{a}\ R}{T_C}\right)^{\frac{1}{2}} + \gamma_1 R^2 \ \bar{a}^{5/4} \ n_e^{\gamma_2} \ T_C^{\gamma_3} \qquad \text{(I-10)}$$

In this form the first term represents the confinement for a flute unstable plasma, which is thought to exist before the poloidal rotation can effect a pseudo rotational transform, and the second term is based on an empirical fit to results from the Alcator experiment.[4] The key difference between this model and the first one is the attempt to include two distinct periods in the plasma evolution. The first period is characterized by flute instabilities which give a short confinement time. This configuration then gives way to a more quiescent period as the interchange instability spreads out the sharp density gradients caused by the rapid ionization in the neighborhood of the resonance layer. During the quiescent period the increased mobility of the hot, resonance heated electrons is thought to cause them to be lost at a faster rate than the cold ions. This, in turn, will cause the plasma to assume a positive potential and begin to rotate, thus canceling the vertical electric field and enhancing particle confinement. As the density continues to build, the second term in the expression for τ_{EMP} begins to dominate the first, and by proper adjustment of the coefficents γ_1, γ_2, and γ_3 the buildup rate and the steady-state conditions observed in the ISX experiment can be duplicated. The justification for the empirical model thus comes from its normalization with the available experimental data.

I.3. ENERGY BALANCE EQUATIONS

In order to provide a more realistic description of the absorption of ECRH energy in the plasma, the electron energy balance is broken down into three separate components. The first two are for the upper hybrid and electron cyclotron resonance layers:

$$\frac{3}{2}\frac{d}{dt}\left(n_e k T_H\right) = P_{UH} + P_{WH} - P_{RH} - P_{IH} - P_{IEH} - P_{LH} \qquad \text{(I-11)}$$

$$\frac{3}{2}\frac{d}{dt}\left(n_e k T_W\right) = P_{EC} + P_{HW} - P_{RW} - P_{IW} - P_{IEW} - P_{LW} \qquad \text{(I-12)}$$

and the third is for the cold, background electrons:

$$\frac{3}{2}\frac{d}{dt}\left(n_e kT_C\right) = P_{HC} + P_{WC} - P_{RC} - P_{IC} - P_{IEC} - P_{LC}. \qquad \text{(I-13)}$$

These are coupled with the ion energy balance to complete the model:

$$\frac{3}{2}\frac{d}{dt}\left(n_i kT_i\right) = f_H P_{IEH} + f_W P_{IEW} + f_C P_{IEC} - P_{CX} - P_{LI}. \qquad \text{(I-14)}$$

The terms in these equations represent volume averaged power densities in MKS units (Boltzmann's constant is thus $k = 1.6 \times 10^{-19}$ J/eV), and they are defined in the following discussion. P_{UH} and P_{EC} are the input power densities to the upper hybrid and electron cyclotron resonance layers. Since $\sim$ 100% absorption is expected, they are calculated by splitting the total rf power between the two layers in a "representative" fashion and dividing by the respective layer volumes V_H and V_W, thus:

$$P_{UH} = \begin{cases} P_{rf}/V_w & P_{UH} < P_{EC} \\ 0.75\,\dfrac{P_{rf}}{V_H}\left(\dfrac{n_e}{n_H}\right)^2 & P_{UH} > P_{EC} \end{cases} \qquad \text{(I-15)}$$

$$P_{EC} = \begin{cases} P_{rf}/V_w & P_{UH} < P_{EC} \\ \dfrac{P_{rf}}{V_H}\left[1-0.75\left(\dfrac{n_e}{n_H}\right)^2\right] & P_{UH} > P_{EC} \end{cases} \qquad \text{(I-16)}$$

In these equations the density ratio n_e/n_H is used to represent the development of the upper hybrid layer. The density n_H is an arbitrary constant, which is normally set equal to 2×10^{18} m^{-3}, and the ratio is set equal to one for $n_e > n_H$. This corresponds to the assumption that the UHR layer absorbs 75% of the injected rf power for electron densities above 2×10^{18} m^{-3}, with the remaining 25% being deposited in the ECR layer. This is consistent with theory and experiment for the injection of randomly polarized rf energy, and it is due to single pass absorption of the extraordinary wave in the UHR layer.

The remaining four positive terms in the three electron energy balance equations (P_{WH}, P_{HW}, P_{HC} and P_{WC}) represent energy exchanged between the three regions. Initially (because of the low plasma density) the UHR layer cannot be separately identified from the ECR layer, and P_{WH} and P_{HW} are zero. As the plasma density builds, however, the rf power density in the UHR layer begins to differ from that in the ECR layer, and in small machines the layers actually separate (see Fig. I-1). These effects, together with the differences between the energy exchange for the two assumptions on plasma behavior during breakdown (see Fig. I-2), are accounted for in the formulation of the P_{WH} and P_{HW} terms which become:

$$P_{WH} = f_{RH}\, f_W\, P_{LW} \exp\left(-\Delta/v_o\, \tau_{SH}\right) \Big/ f_H \tag{I-17}$$

$$P_{HW} = f_{RW}\, f_H\, P_{LH} \exp\left(-\Delta/v_o\, \tau_{SH}\right) \Big/ f_W \tag{I-18}$$

The f_{RH} and f_{RW} terms are both 0.5 for the $\vec{E}_{\nabla B} \times \vec{B}$ case of Fig. I-2, and 1.0 and 0 respectively for the empirical case, while the exponential factors account for the change in the energy exchange between layers as they separate. This depends on the distance between the layers Δ, and on $v_o \tau_{SH}$, the average distance drifted in a slowing down time. The value of the slowing down time is calculated from:

$$\tau_{SH} = \frac{3}{2}\, n_c\, kT_H \Big/ \left(P_{IH} + P_{DH} + P_{RH} + P_{IEH}\right) \tag{I-19}$$

The other two energy exchange terms account for the fraction of the resonant electrons' energy that is given to the cold electrons during slow down. They can be written for the $\vec{E}_{\nabla B} \times \vec{B}$ case as:

$$P_{(H,W)C} = \left[1-0.5 \exp\left(-\Delta/v_o \tau_{SH}\right]\right. \tau_{L(H,W)}\, f_{(H,W)}\, P_{D(H,W)} \Big/ \tau_{(H,W)}\, f_C \tag{I-20}$$

and for the empirical case as:

$$P_{HC} = \tau_{LH}\, f_H\, P_{DH} \Big/ \tau_H\, f_C \tag{I-21}$$

$$P_{WC} = \left[1.0 - \exp\left(-\Delta/v_o \tau_{SH}\right)\right]\ \tau_{LH}\, f_W\, P_{DW} \Big/ \tau_W\, f_C \tag{I-22}$$

In these relations $\tau_{L(H,W)}$ represents the net energy loss time for hot electrons in the cold region, viz:

$$\tau_{L(H,W)} = \tau_C \, \tau_{S(H,W)} / [\tau_C + \tau_{S(H,W)}], \tag{I-23}$$

$P_{D(H,W)}$ represents the cold electron drag, i.e.,

$$P_{D(H,W)} = 1.4 \times 10^{-30} \, n_e^{\,2} \ln \Lambda \left[T_{(H,W)} - T_C\right] \Big/ \left[T_{(H,W)} + T_C\right]^{3/2}, \tag{I-24}$$

$\tau_{(H,W)}$ is the loss rate for the UHR and ECR layers (given by Eq. I-31), and the remaining terms are common to all three layers.

Each of the above equations depends upon the volumes of the resonance layers, $V_{(H,W)}$, through the volume fractions $f_{(H,W)}$. These volume fractions are given by:[5]

$$f_H = V_H \Big/ V_P = 4 \pi b \;\; R_{UH} \, W_H \Big/ V_P \tag{I-25}$$

$$f_W = V_W \Big/ V_P = 4 \pi b \;\; R_o \, W_W \Big/ V_P, \tag{I-26}$$

where R_o is the plasma major radius; b is the vertical dimension of the plasma cross section; V_P is the plasma volume; $R_{UH} = R_o(1 + \omega_{pe}^2/2\omega_{ce}^2)$ is the radius of the UH resonance (where ω_{pe} and ω_{ce} are the electron plasma and cyclotron frequencies); and $W_{(H,W)}$ are the widths of the resonance layers which are defined in Eqs. I-32 and I-33.

The first loss term, $P_{R(H,W,C)}$, corresponds to the radiative and three body recombination, the collisional excitation, and the line radiation losses associated with the oxygen impurity atoms. These losses are again taken from the model of Düchs, et al.[3] and are:

$$P_{R\ell} = f_{(H,W)} \sum_{i=1}^{8} k \left[\chi_i n_e \left(\langle\sigma v\rangle_{i,\ i+1}\ O_i - \gamma_i\ n_e\ O_{i+1} \right) + \alpha_i\ n_e\ O_{i+1} \left(\frac{3}{2} T\ell + \chi_i \right) \right]$$

$$+ f_{(H,W)}\ 2 \times 10^{-14}\ k\chi \left(\frac{\chi}{T\ell} \right)^{\frac{1}{2}}\ n_e \Big[O_2 \exp(-15/T\ell) + O_3 \exp(-16/T\ell)$$

$$+ O_4 \exp(-16/T\ell) + O_5 \exp(-20/T\ell) + O_6 \exp(-12/T\ell) \qquad \text{(I-27)}$$

$$+ O_6 \exp(-83/T\ell) + 2O_7 \exp(-575/T\ell) + 2O_8 \exp(-655/T\ell) \Big]$$

Here ℓ takes on the values H,W, and C for the UHR, ECR and cold regions respectively; k is again Boltzman's constant (1.6×10^{-19} J/eV); χ_i, $\langle\sigma v\rangle_{i,i+1}$, α_i, γ_i are taken from Table I-1; and χ is the ionization potential of hydrogen (13.6 eV). The power loss predicted by this equation for a steady-state population of ionization levels is shown in Fig. I-3.

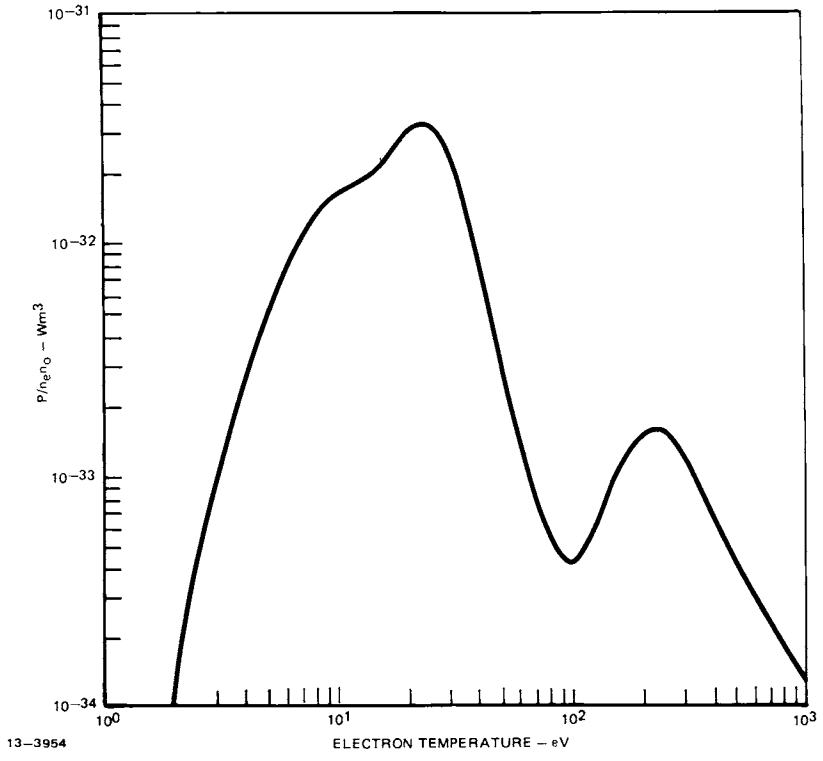

Figure I-3. Line radiation, three body recombination, and collisonal excitation power loss for oxygen, as a function of electron temperature.

The second loss term, $P_{I(H,W,C)}$, is related to the first and corresponds to the power lost through ionization of hydrogen, viz:

$$P_{I(H,W,C)} = f_{(H,W)}\, n_e\, n_n\, \langle\sigma v\rangle_{e(H,W,C)} kW_I. \tag{I-28}$$

In this expression $\langle\sigma v\rangle_{e(H,W,C)}$ is the electron ionization rate coefficient for hydrogen in each of the three regions and W_I is the energy lost during ionization which is take to be 20 eV.

The third loss term represents the energy transferred from the electrons to the ions in each layer:

$$P_{IE\ell} = 3.1 \times 10^{-34} \ln \Lambda\, n_e\, n_i\, (T_\ell - T_i) \Big/ T_\ell^{\,3/2} \tag{I-29}$$

and the fourth term is the leakage:

$$P_{L\ell} = \frac{3}{2}\, n_e\, kT_\ell \Big/ \tau_\ell \tag{I-30}$$

where again ℓ is replaced by H,W, or C for the UHR, ECR, or cold regions.

Expressions for the UHR and ECR loss rates are cast in the general form:

$$\tau_{L(H,W)} = W_{(H,W)} \Big/ v_D \tag{I-31}$$

where $W_{(H,W)}$ is the characteristic width of the respective layer, and v_D is the average drift velocity of electrons in that layer. From Ref. 5:

$$W_H = \frac{R_o}{16}\, \frac{\omega_{pe}^2}{\omega_{ce}^2} = 6.4 \times 10^{-21}\, R_o\, n_e/B_o^{\,2} \tag{I-32}$$

$$W_W = f_{EC}\, R_o = 0.04\, R_o \tag{I-33}$$

R_o is then the major radius of the plasma and B_o the toroidal field strength on centerline, with ω_{pe} and ω_{ce} again representing the electron plasma and cyclotron frequencies and f_{EC} ($\equiv 2\Delta B/B_o$) the width of the cyclotron resonance region. Values for v_D are calculated from the $\vec{E} \times \vec{B}$ motion of the plasma and are given by:

$$v_D = 1.0\, T_{(H,W)} \Big/ \bar{a}B \tag{I-34}$$

where $\bar{a}$ is the equivalent circular radius of the plasma, i.e.,

$$\bar{a} = \sqrt{\text{Plasma cross sectional area}/\pi}. \tag{I-35}$$

The three electron heating terms also appear in the ion energy balance weighted by their respective volume fractions. The remaining terms in the ion energy balance correspond to charge exchange (P_{CX}) and leakage (P_{LI}). Charge exchange losses are calculated from:

$$P_{CX} = \frac{3}{2} n_i \, n_n \, \langle\sigma v\rangle_{cx} \, k \, T_i, \tag{I-36}$$

where $\langle\sigma v\rangle_{cx}$ is the rate coefficient for charge exchange, and the ion leakage is equivalent to that for electrons, viz:

$$P_{LI} = \frac{3}{2} n_i \, k \, T_i / \tau_c. \tag{I-37}$$

I.4. MODEL VERIFICATION

In order to lend credibility to the plasma buildup calculated by the computer model, a comparison was made with experimental data for ECRH breakdown in the ISX-B tokamak.[1] The experimental results indicate that the plasma buildup occurs over a millisecond timescale, reaching a final steady state where $n_e \sim 5 \times 10^{18}\ m^{-3}$, $T_H \sim 60$ eV, and $T_C \sim 10$ eV. The results of the computer calculation for the $\vec{E}_{\nabla B} \times \vec{B}$ loss model and the empirical loss model are shown in Figs. I-4 and I-5, respectively. These figures illustrate that both models provide a reasonable picture of the final steady-state conditions; however the buildup rate is nearly an order of magnitude faster than the experiment in the $\vec{E}_{\nabla B} \times \vec{B}$ case. For this reason the empirical model of Fig. I-5 was developed, and (as is shown) it compares much more favorably with the experiment.

Several aspects of the computer model are also illustrated by the test cases and should be noted here. The most striking is the behavior of the temperature in the UHR layer, T_H, as shown in Fig. I-5. Initially the model assumes that T_H is equal to the temperature in the ECR layer, T_W. As the plasma density builds, however, the resonance layers separate and there is a sharp decrease in T_H. This occurs because the UHR layer is much

narrower than the ECR layer and, consequently, has a reduced confinement time. Immediately after the separation the energy exchanged between the ECR and UHR layers helps to maintain T_H at $\sim$ 150 eV. The continuing increase in density reduces this energy exchange by increasing the separation distance between the layers and decreasing the energy of the transferred electrons, so that T_H finally decreases to a minimum value of $\sim$ 30 eV. At this point the UHR layer begins to absorb a larger fraction of the rf input power and T_H begins to increase. The rise in T_H continues until the power deposited in the UHR layer reaches 75% of the total (at $n_e = 2 \times 10^{18}\ m^{-3}$). Beyond this point a slow decline in T_H occurs (due to the gradual increase in plasma density) until steady state is reached at $T_H \sim 60$ eV. Similar behavior of T_H is observed in Fig. I-4 for the $\vec{E}_{\nabla B} \times \vec{B}$ model; however, the increased rate of density buildup compresses the features into a shorter timescale.

A second important aspect of the breakdown model is the rapid increase in T_H and T_W after the microwave power is turned on. This is due to the low initial density in the plasma. In the model the initial plasma density is assumed to be 0.1% of the neutral density, but in actuality the initial plasma density will be much lower than this value. The artificially high initial density in the model is necessary to avoid thermal runaway of the resonance electron population, something which is not a problem in present ECRH breakdown experiments. Apparently enough of the input microwave power is dissipated in the vacuum chamber and in nonlinear loss processes (effects which are not included in the present code) to prevent the production of a runaway electron population that inhibits plasma buildup.

Because the experimental buildup measurements were taken with a probe present in the plasma, it is not clear whether they provide an accurate basis for normalizing the computer model. In addition, the steady-state behavior of the two models is nearly the same as in the experiment. The only significant difference is in the value of T_c where the $\vec{E}_{\nabla B} \times \vec{B}$ model predicts a 20 eV temperature as compared to 10 eV for the empirical model and the experiment. For these reasons both descriptions have been applied to the STARFIRE problem, with the surprising result that the models are virtually indistinguishable. This is because the plasma buildup rate is much faster than the

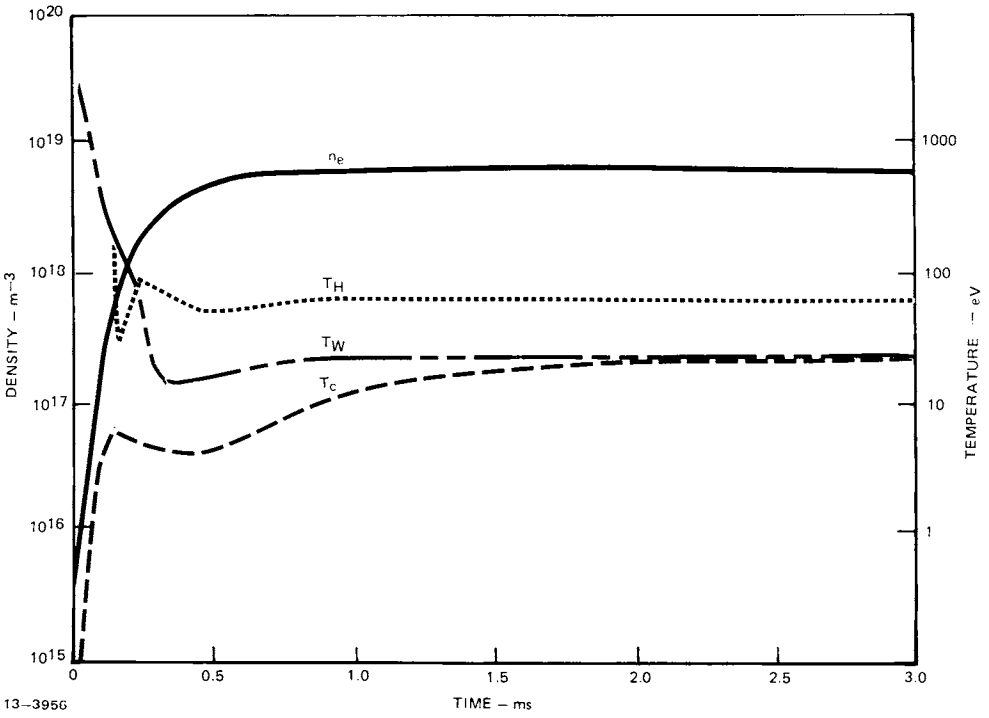

Figure I-4. **Time history of key plasma parameters during breakdown for the ISX experiment, as calculated using the $\vec{E}_{\nabla B} \times \vec{B}$ loss model.**

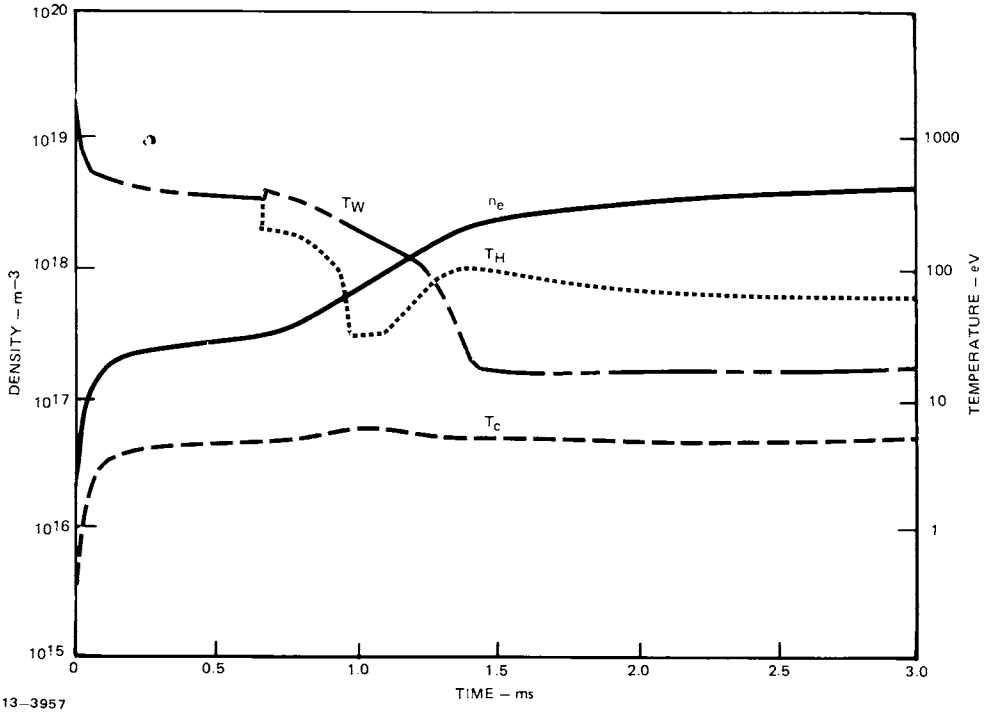

Figure I-5. **Time history of key plasma parameters during breakdown for the ISX experiment, as calculated using the empirical loss model.**

particle loss rate, for both the $\vec{E}_{\nabla B} \times \vec{B}$ and the empirical models, in a large device such as STARFIRE. Neutral ionization and impurity radiation are thus the dominant loss mechanisms. Since these losses are the same in both cases, the models are essentially equivalent. For this reason, only cases corresponding to the $\vec{E}_{\nabla B} \times \vec{B}$ model have been considered in the STARFIRE studies, presented in Sec. 6.3.4.

I.5. CONCLUSIONS

A zero-dimensional model of plasma breakdown with microwaves at the ECR has been developed. This model has been normalized to available experimental data, and it not only provides a reasonable description of the transient plasma behavior during the breakdown period, but also reproduces the quasi-steady-state parameters observed in the experiment. Application of the model to STARFIRE indicates that, in large machines, plasma preionization utilizing ECRH is an attractive alternative to avalanche breakdown. This is especially true for STARFIRE where the use of lower hybrid current drive allows substantial reductions in the size and complexity of the OH coil set.

References

1. R. M. Gilgenbach, personal communication.
2. G. M. McCracken, "Recycling and Surface Erosion Process in Contemporary Tokamaks," PPPL-1536 (1976).
3. D. Düchs, H. R. Griem, Phys. Fluids, 9, 1099 (1966).
4. W. Pfeiffer, R. E. Waltz, Nuc. Fusion, 19, 51 (1979).
5. Y-K. M. Peng, S. K. Borowski, T. Kammash, Nuc. Fusion, 18, 1489 (1978).

Distribution for ANL/FPP-80-1

Internal:

M. Abdou	D. Ehst	R. Kustom	D. L. Smith
R. Arons	K. Evans	V. Maroni	R. Smith
C. Baker	P. Finn	R. Martin	H. Stevens
E. Beckjord	R. Fuja	R. Mattas	L. Turner
C. Boley	Y. Gohar	B. Misra	S-T. Wang
J. Brooks	V. Jankus	J. Norem	FP Program (81)
R. Clemmer	J. Jung	J. Rest	ANL Contract File
C. Dennis	M. Kaminsky	J. Roberts	ANL Libraries (2)
J. de Paz	S. H. Kim	H. Schreyer	TIS Files (6)

External:

DOE-TIC, for distribution per UC-20 (117)
Manager, Chicago Operations and Regional Office, DOE
Chief, Office of Patent Counsel, DOE-CORO
President, Argonne Universities Association
Applied Physics Division Review Committee:
- P. W. Dickson, Jr., Clinch River Breeder Reactor Project, Oak Ridge
- R. A. Greenkorn, Purdue U.
- R. L. Hellens, Combustion Engineering, Inc.
- K. D. Lathrop, Los Alamos Scientific Laboratory
- W. B. Loewenstein, Electric Power Research Inst.
- R. Sher, Stanford U.
- D. B. Wehmeyer, Detroit Edison Co.

Accelerator Research Facilities Review Committee:
- H. A. Neal, Indiana U.
- S. D. Putnam, Physics International Co.
- P. H. Rose, Nova Associates, Inc., Beverly, Mass.
- E. M. Rowe, U. Wisconsin, Stoughton
- L. C. Teng, Fermi National Accelerator Lab.

Chemical Engineering Division Review Committee:
- C. B. Alcock, U. Toronto
- R. C. Axtmann, Princeton U.
- P. W. Gilles, U. Kansas

Materials Science Division Review Committee:
- E. A. Aitken, General Electric Co., Sunnyvale
- G. S. Ansell, Rensselaer Polytechnic Inst.
- A. Arrott, Simon Fraser U.
- R. W. Balluffi, Massachusetts Inst. Technology
- S. L. Cooper, U. Wisconsin
- C. Laird, U. Pennsylvania
- M. E. Shank, Pratt & Whitney, East Hartford
- C. T. Tomizuka, U. Arizona
- A. R. C. Westwood, Martin Marietta Labs.

Physics Division Review Committee:
- E. G. Adelberger, U. Washington
- B. Bederson, New York U.
- H. G. Blosser, Michigan State U.
- J. A. Davies, Chalk River Nuclear Labs.
- W. Haeberli, U. Wisconsin
- J. W. Negele, Massachusetts Inst. Technology
- R. O. Simmons, U. Illinois, Urbana

Battelle - Pacific Northwest Laboratory
D. Dingee
Bechtel National, Inc., San Francisco
R. Aronstein
Bell Telephone Laboratories, Inc., Holmdel, New Jersey
S. J. Buchsbaum
Bettis Atomic Power Laboratory, West Mifflin, Pennsylvania
S. D. Harkness
Brookhaven National Laboratory
J. Powell
Burns & Roe, Inc., Oradell, New Jersey
S. Baron
Columbia University
R. A. Gross
Combustion Engineering, Windsor, Connecticut
J. Dietrich
Cornell University
C. Y. Li
Department of Energy
J. Baublitz
D. S. Beard
R. Blanken
J. F. Clarke
M. Cohen
E. Dalder
N. Anne Davies
J. Decker
W. Dove
R. Dowling
W. Ellis
C. Finfgeld
G. Haas
C. Head
R. Impara
M. Murphy
G. Nardella
R. Ng
D. Nelson
E. Oktay
T. Reuther
M. Roberts
S. Staten
P. Stone
K. Zwilsky
EG&G Idaho, Inc., Idaho Falls
J. Crocker
Energy Resource Group, Inc., Arlington, Virginia
R. Bussard
Electric Power Research Institute, Palo Alto
N. Amherd
D. J. Paul
R. Scott
Exxon Nuclear Company, Inc., Bellevue, Washington
H. K. Forsen
D. G. McAlees

Fusion Power Associates, Gaithersburg, Maryland
    S. Dean
General Atomic Company
    S. Burnett
    J. Gilleland
    D. Graumann (10)
    T. Ohkawa
    J. Purcell
    P. Sager
General Dynamics, San Diego
    R. A. Johnson
General Electric Company, Schenectady
    D. J. Anthony
Georgia Institute of Technology, Atlanta
    W. Stacey, Jr.
Grumman Aerospace Corporation, Bethpage, New York
    R. Botwin
    I. G. Hedrick
Hanford Engineering Development Laboratory, Richland
    J. Holmes
    L. Muhlestein
Iowa State University
    A. Husseiny
Lawrence Berkeley Laboratory
    R. V. Pyle
Lawrence Livermore Laboratory
    G. Carlson
    T. K. Fowler
    J. D. Lee
    R. W. Moir
    R. Post
    C. E. Taylor
    K. I. Thomassen
    R. Werner
Los Alamos Scientific Laboratory
    J. L. Anderson
    H. Cullingsford
    H. Dreicer
    R. A. Krakowski
    J. Rogers
Mathematical Sciences North West, Inc., Bellevue, Washington
    P. Rose
    H. Willenberg
Maxwell Laboratories, San Diego
    A. Kolb
McDonnell Douglas Astronautics Company, St. Louis
    D. DeFreece (15)
Massachusetts Institute of Technology
    D. Cohn
    R. Davidson
    M. Kazimi
    M. Lidsky
    D. Bruce Montgomery
    R. Parker
    S. Piet
    D. J. Rose

Mound Laboratory, Miamisburg, Ohio
W. R. Wilkes
Naval Research Laboratory, Washington, D.C.
A. Robson
Northeast Utility Service Co., Hartford, Connecticut
S. Hale Lull
Nuclear Services Corporation, Campbell, California
S. Naymark
Oak Ridge National Laboratory
L. A. Berry
J. D. Callen
J. Cannon
P. N. Haubenreich
T. Jernigan
R. Langley
M. S. Lubell
O. B. Morgan
M. Rosenthal
J. L. Scott
T. Shannon
D. Steiner
N. A. Uckan
W. Wiffen
Princeton Plasma Physics Laboratory
J. Cecchi
S. Cohen
H. Furth
M. Gottlieb
H. Howe, Jr.
R. G. Mills
P. J. Reardon
P. H. Rutherford
Public Service Electric and Gas Co., Newark, New Jersey
B. Jensen
Purdue University
P. S. Lykoudis
F. J. Loeffler
Science Applications, Inc., McLean, Virginia
S. Locke Bogart
Science Applications, Inc., La Jolla
A. Trivelpiece
Sandia Laboratories, Albuquerque
M. Davis
D. Mattox
The Ralph M. Parsons Company, Pasadena, California
K. Barry (6)
TRW, Redondo Beach, California
K. Moses
J. S. Foster, Jr.
United Technologies Research Center, East Hartford, Connecticut
A. F. Haught
T. Latham
University of California, Los Angeles
F. F. Chen
R. Conn

University of Illinois
- J. Gilligan
- G. Miley
- M. Ragheb

University of Michigan
- T. Kammash

University of Missouri - Rolla
- A. Bolon

University of Rochester
- M. J. Lubin

University of Texas at Austin
- K. Gentle
- M. Rosenbluth
- H. Woodson

University of Washington, Seattle
- F. Ribe
- G. L. Woodruff

University of Wisconsin
- S. Abdel-Khalik
- R. Boom
- B. Bruggink
- J. Feinstein
- G. Kulcinski
- C. Maynard
- R. Rose
- K. Symon
- D. K. Sze

Westinghouse Electric Corporation, Pittsburgh
- C. Flanagan
- D. Klein
- Z. Shapiro

Bibliotheque, Seine, FRANCE
Bibliothek, Garching, WEST GERMANY
C.E.A. Fusion, Cedex, FRANCE
G. Casini, C.E.A. Ispra(VA), ITALY
C.-H. Chen, Chinese Academy of Sciences, Peking, CHINA
R. Hancox, Culham Laboratory, ENGLAND
Dr. Ing. Albert Knobloch, Max-Planck Institute for Plasmaphysik, WEST GERMANY
Librarian, Culham Laboratory, ENGLAND
Library, Center de Recherches en Physique des Plasma, Lausanne, SWITZERLAND
Library, FOM-Institute voor Plasma-Fysika, THE NETHERLANDS
Thermonuclear Library, Japan Atomic Energy Research Institute, JAPAN
Library Laboratorio Gas Ionizati, Frascatti, ITALY
C.-S. Li, Chinese Academy of Sciences, Peking, CHINA
K. H. Schmitter, Max-Planck Institute fur Plasmaphysik, WEST GERMANY

☆ U.S. GOVERNMENT PRINTING OFFICE: 1981 750-660