2.3 OSIRIS POWER CONVERSION AND PLANT FACILITIES

2.3.1 Introduction

The balance-of-plant (BOP) includes heat transport and energy conversion systems, plant auxiliary systems, plant electrical systems, and structures and facilities. A conceptual BOP design has been developed for the Flibe-cooled Osiris chamber and is described in this section. The main objective of the BOP design study was to develop a preliminary understanding of the requirements of plant design. Of particular importance are the requirements imposed by the reactor and its auxiliaries on buildings and structures. These requirements have a significant impact on the economics of the plant. Thus, the main BOP systems and aspects considered in this study include the heat transport system, energy conversion system, reactor confinement building system, major equipment and plant facilities arrangement, and remote maintenance concept. The key issues addressed include the following:

- **Heat Transport System** - The basic issue is whether an intermediate coolant loop is needed to act as a barrier so that tritium permeation to the steam system is limited to acceptable levels.
- **Power Conversion System** - A high efficiency power conversion system is desirable due to the capital-intensive nature of the plant.
- **Reactor Building** - Reactor building size and cost are strongly influenced by the need to provide for remote maintainability for Osiris.
- **Reliability, Availability, and Maintainability (RAM)** - Since adequate design information is not available on major reactor and driver systems and components, the RAM analysis focused on developing a set of requirements that these systems needed in order to satisfy the plant availability goal of 75%.

2.3.2 Heat Transport System

Primary Coolant Loop. The heat transport system proposed for the Osiris reactor concept is shown schematically in Fig. 2.17. The primary coolant selected is liquid Flibe (lithium and beryllium fluoride) and operates between 500°C and 650°C. The primary loop consists of two coolant circuits including one heat exchanger in each circuit. The number of circuits was based on the size of the heat exchangers. A state-of-the-art heat exchanger design was assumed.

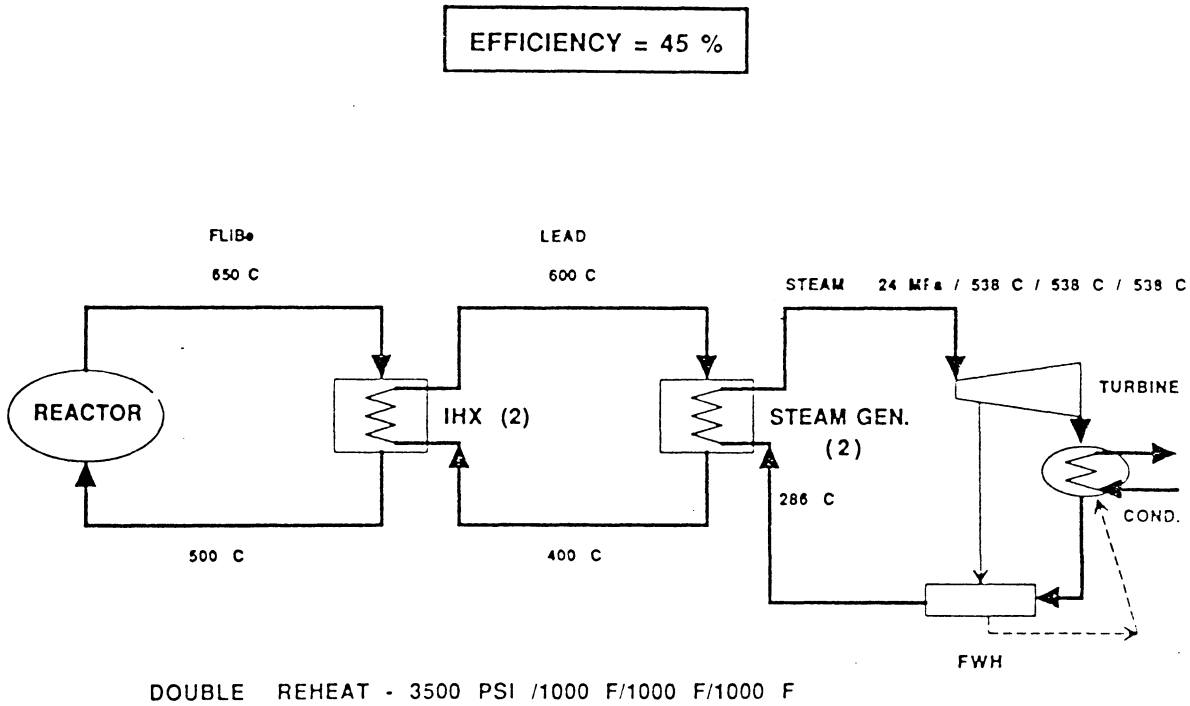

Fig. 2.17. Osiris power conversion cycle.

Intermediate Coolant Loop. The need for an intermediate loop was investigated to determine if tritium permeation to the environment is acceptable without this loop. The primary motivation is to reduce the plant complexity and cost and to improve plant reliability. With these considerations in mind, the following two cases were considered:

1) A heat transport system without an intermediate loop along with a simplex tube (single-walled) steam generator. Two alternative cases were looked at: a) Unoxidized tube surfaces result in unacceptable tritium permeation into the power conversion system; b) If the tube surfaces are oxidized, a reduction factor of approximately 30 in tritium permeation can be achieved. However, this reduction factor is not adequate to meet the off-site dose criteria.

2) A heat transport system without an intermediate loop along with a duplex tube (double-walled) steam generator. In a duplex tube steam generator, tubes are essentially made of two tubes fitted one on top of the other to form a single tube. Three duplex tube configurations were considered (Fig. 2.18): a) Mechanically-bonded, b) Metallurgically-bonded, and c) Oxidized tube surfaces with a gas space between the two walls of the tubes.

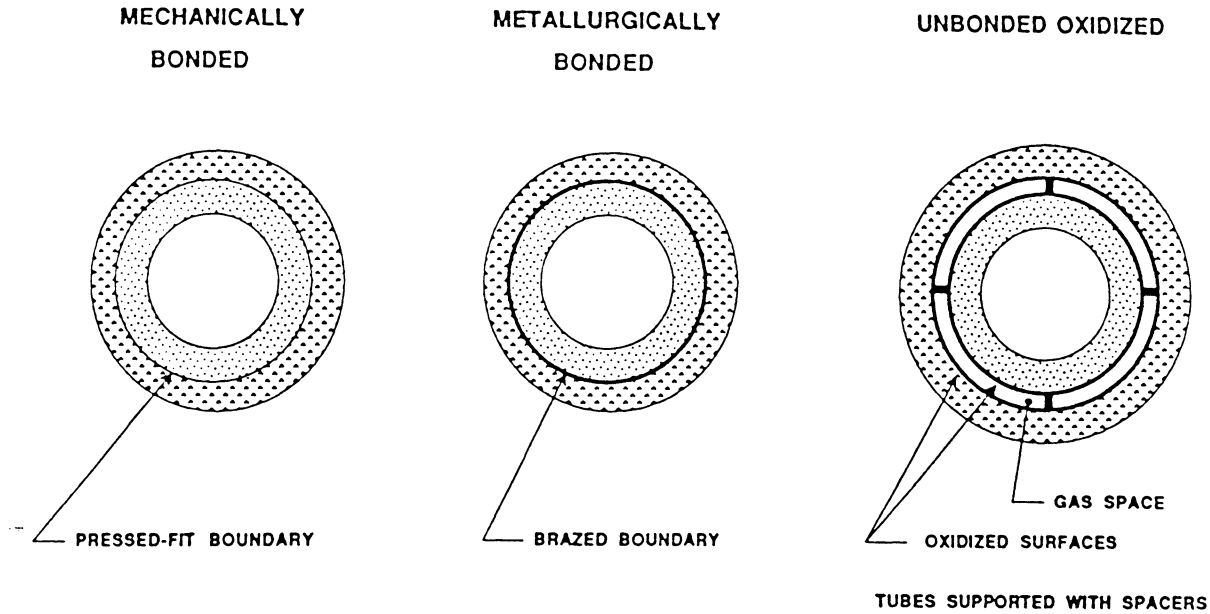

Fig. 2.18. Possible duplex tube configurations.

Mechanically- and metallurgically-bonded configurations without any surface oxidation can reduce tritium permeation by a factor of only two as a result of doubling the wall thickness. However, permeability can be reduced by two to three orders of magnitude[2.34] by oxidizing the tube surfaces (inside of the outer tube and outside of the inner tube) in case of the third duplex tube configuration. This configuration seems to offer the permeation reduction factor needed to maintain the off-site dose within acceptable levels. However, there are a number of uncertainties associated with this. Reliability and longevity of the oxide layers are quite uncertain as very little experimental evidence exists today. In addition, the cost effectiveness of using duplex tube steam generators has not yet been established. Several features of the simplex and duplex tubes are presented in Table 2.16.

Table 2.16. Duplex Tube Features

		DUPLEX TUBE	
	Simplex	**Mechanically- and Metallurgically-Bonded**	**Unbonded and Oxidized**
1. Tritium permeation rate	Highest	Reduced by a factor of 2	Reduced by factor of > 100
2. Heat flux	Highest	Reduced by a factor as high as 1.8	Reduced by orders of magnitude
3. Reliability/availability/ maintenance	Base	Much better than than Simplex	Can be same as bonded
4. Cost of heat exchanger	Base	> 2 x base	> N x Base
5. Is tritium permeation barrier adequate?	No	No (?)	Perhaps yes (?)

In light of these uncertainties and as a conservative approach, an intermediate loop is included in the heat transport system. The intermediate loop consists of two circuits including one steam generator in each circuit. This selection was based on the projected steam generator capacity. Each steam generator has a capacity of 1225 MWt. Although this capacity level has not been demonstrated to date, no show stoppers are anticipated in the development of steam generators of this power level.

Intermediate Coolant. Three alternative coolants (i.e., Flibe, sodium, and lead) were investigated to identify the most appropriate choice for the intermediate loop.

Flibe was considered as a candidate because it serves as the primary coolant, and thus its selection would simplify many of the coolant handling and processing systems. Sodium was considered because it has a large technology base and also it has good heat transfer characteristics. Lead was considered as a candidate because it is being developed as a fission reactor coolant in the Commonwealth of Independent Countries (Russia, Ukraine, etc.). Lead also appears to have good safety features.

The criteria used to select the coolant are

- Safety and health hazard impacts
- Heat transfer characteristics and impact on steam generator size and cost
- Required technology extrapolation.

The three coolants were qualitatively evaluated, and engineering judgement was used whenever needed to develop the following comparison:

Flibe. The composition of the two varieties of Flibe that were considered are

- Low viscosity: 66% LiF + 34% BeF2
- High viscosity: 47% LiF + 53% BeF2

The low viscosity Flibe was not considered since its melting point, 460°C, is above the cold leg temperature, 400°C, of the intermediate loop. The major important characteristics of Flibe as a coolant are

- Fluorine in Flibe is potentially a chemical hazard.
- Due to the poor heat transfer characteristics of Flibe, the size of the Flibe steam generator would be three to five times that of the sodium steam generator.
- Technology extrapolation is expected to be modest as significant development work has been done in connection with the Molten Salt Reactor Experiment at Oak Ridge National Laboratory (ORNL).

Sodium. The major important characteristics of sodium as a coolant are

- Exothermic sodium-water reactions are a potentially serious safety concern.
- Due to its very good heat transfer characteristics, sodium offers the smallest size steam generator.
- No technology extrapolation would be required. Much of the technology is being developed in the Advanced Liquid Metal Reactor (ALMR) program.

Lead. The major important characteristics of lead as a coolant are

- Lead offers a safety advantage as no safety hazard is identified.
- Due to its moderate heat transfer characteristics, the size of the lead steam generator appears to be reasonable.
- Modest technology extrapolation is expected. Lead is used as a reactor coolant in Russia and its neighboring countries. Thus, much of the know-how resides outside the United States.

Coolant Selection. Using the selection criteria listed above, the coolant selection for the intermediate loop was made as follows:

- Flibe was not selected primarily due to the high cost of steam generators, but also because of its high chemical hazard potential.
- Sodium was not selected because of its safety concern (exothermic sodium-water reaction).
- Lead was selected because of its minimal safety concern and moderate cost impact.

Intermediate Heat Exchanger. There are four intermediate heat exchangers (IHX), and each is sized for 25 percent thermal capacity of the plant. Thus each IHX has a rated capacity of ~613 MWt. The key parameters of each IHX are given in Table 2.17.

Table 2.17. IHX Design Parameters

Number of IHX	2
Duty	612.5 MW
Core height (along Flibe flow)	3.64 m
Core depth (along lead flow)	8.10 m
Core width	3.04 m
Tube outside diameter	2.54 cm
Tube inside diameter	2.22 cm
Heat transfer area	
- Outside	11,780 m^2
- Inside	10,300 m^2
Lead pressure drop	0.13 MPa

2.3.3 Power Conversion

Power Cycle. To achieve high efficiency power conversion, a high pressure/high temperature steam cycle was adopted for the Osiris reactor concept. The steam pressure and temperature conditions chosen are consistent with the intermediate coolant temperature. These

conditions also represent the state-of-the-art steam conditions used for fossil-fired steam power plants. A supercritical pressure double-reheat steam cycle is used with the following steam conditions:

24.2 MPa / 538°C / 538°C / 538°C

[3000 psig / 1000°F / 1000°F /1 000°F]

The above pressure and temperature conditions refer to the steam conditions at the high-pressure turbine inlet. The three temperature values stand for initial superheat, first reheat, and second reheat, respectively. These conditions provide a cycle efficiency of 45 percent. The heat transport and power cycle schematic was shown in Fig. 2.17.

The power conversion system chosen does not present any developmental, reliability, or availability concern. In fact, more advanced steam conditions (higher temperature and pressure) can be considered if the intermediate loop can be avoided because the primary loop allows a higher steam temperature. At the present time and without any further development, all U.S. manufacturers are prepared to offer equipment necessary to build double reheat units with steam conditions up to 31 Mpa/565°C/565°C/565°C.[2.35] There are about two dozen supercritical pressure double reheat fossil-fired units in the U.S. These units have proved to be at least as reliable and available as their subcritical non-reheat counterparts.

Steam Generator. There are two steam generators, each sized for 50 percent thermal capacity of the plant, or 1225 MWt. To accommodate the double reheat feature of the power cycle, each steam generator is made up of three stages, and each stage is provided with a separate vessel. These stages are superheater, first reheater, and second reheater. These steam generator vessels are supplied with liquid lead from the intermediate heat exchangers (IHXs). There are two IHXs consistent with the two circuits primary loop. The key parameters of each steam generator are given in Table 2.18.

Turbine-Generator. The Osiris reactor plant is provided with a turbine-generator capable of generating the required gross electrical power (1129 MWe). The turbine-generator is supplied with steam from the two steam generators. The turbine-generator consists of one high-pressure section, one intermediate-pressure section, and two low-pressure sections arranged in a cross-compound configuration. In a cross-compound configuration the low-pressure turbine sections are mounted on two parallel shafts. This is done to keep the shaft lengths to practical limits.

Table 2.18. Steam Generator Design Parameters

Parameter	Superheater	1st Reheater	2nd Reheater
Thermal Duty (MWt)	899	204	122
Shell Inside Diameter (m)	3.4	2.1	2.1
Tube Bundle Length (m)	19.5	16.8	18.0
Number of Tubes	9967	4634	4983
Tube Size (cm)	1.27	1.27	1.27
Tube O.D. (cm)	2.13	2.13	2.13
Tube Wall Thickness (cm)	6.37	0.28	0.28

The turbine-generator has a size limitation, however. The largest turbine which has been built for advanced steam conditions was a 325 MWe machine. Currently, all of the techniques needed to build much larger capacity turbines do not exist in the United States; they exist to a large extent in Europe. Thus, for units 800 MWe or larger, a cross-compound configuration may very well only be practical at a much higher cost.

2.3.4 Plant Facilities

The facilities for the Osiris plant are shown in Figs. 2.19 through 2.23. The plot plan, Fig. 2.19, shows the major structures of the plant. These structures include:

- Reactor Building
- Maintenance Building
- Auxiliary Buildings
- Target Fabrication Building
- Heavy Ion Beam Facility
- Steam Generator Building
- Turbine-Generator Building

The outline of the five-kilometer-long HIB tunnel is shown on Figs. 2.20a and b. Figure 2.21 shows an illustrative cross-sectional view of the tunnel.[2.36] The plan and cross-sectional views of the Fusion Island, primarily consisting of the reactor building, maintenance building, and steam generator building, are shown on Figs. 2.22 and 2.23.

2.3.4.1 Reactor Building

The reactor building has been designed as a Seismic Category I structure. The building provides housing for the reactor; shielding of the public from fusion neutrons; confinement barrier to the accidental release of tritium. In addition, the building also accommodates remote maintenance of the reactors. The remote maintenance requirements (discussed in Section 6.4) dictate the size of this building. The conceptual arrangement of the building is shown in Figs. 2.22 and 2.23. The reactor is located at the center of the reactor hall. The IHXs are located in a separate hall so that the area can be accessed for limited periods during normal power operation; the reactor hall is provided with requisite shielding for this purpose. The nearest shield wall is located at a distance of ten meters from the center of the reactor, and the shield thickness is 3.2 meters.

Another feature of the reactor building is that there is no direct piping penetration between the reactor and IHX halls. The primary coolant piping is routed via an underground piping tunnel; there is no direct neutron path from the reactor hall to the IHX hall. The shield wall between the IHX hall and the steam generator building is set at one meter to allow unlimited access to the steam generator building.

A second feature that determines the location of primary heat transport loop components is the hydraulic profile of the coolant circuit. Two alternative hydraulic profiles were considered (see Figs. 2.24 and 2.25).

The major difference between the two alternatives is the location of the primary coolant pump. In general, the preferred location of the coolant pump is the cold leg so that the pump is required to handle the lower- temperature coolant and thus avoid any pump materials concern. This arrangement is readily achievable in a pressurized closed-loop configuration without unduly complicating the equipment arrangement. In an open-loop configuration, such as in Osiris, the pump can be located in the cold leg if the IHX is located sufficiently below the Flibe pool to allow gravity-assisted flow. This requires longer piping lengths and a deeper reactor building. On the other hand, if the pump is located in the hot leg (Alternative 1), both the piping length and the building size are reduced. Although the pump is required to handle hotter coolant, it is assumed that at the time of IFE deployment, advanced materials will be developed to eliminate the materials concern. Thus, Alternative 1 is selected as the base case since it is judged that the additional cost of building and piping for Alternative 2 will more than offset the additional cost of the coolant pumps for Alternative 1.

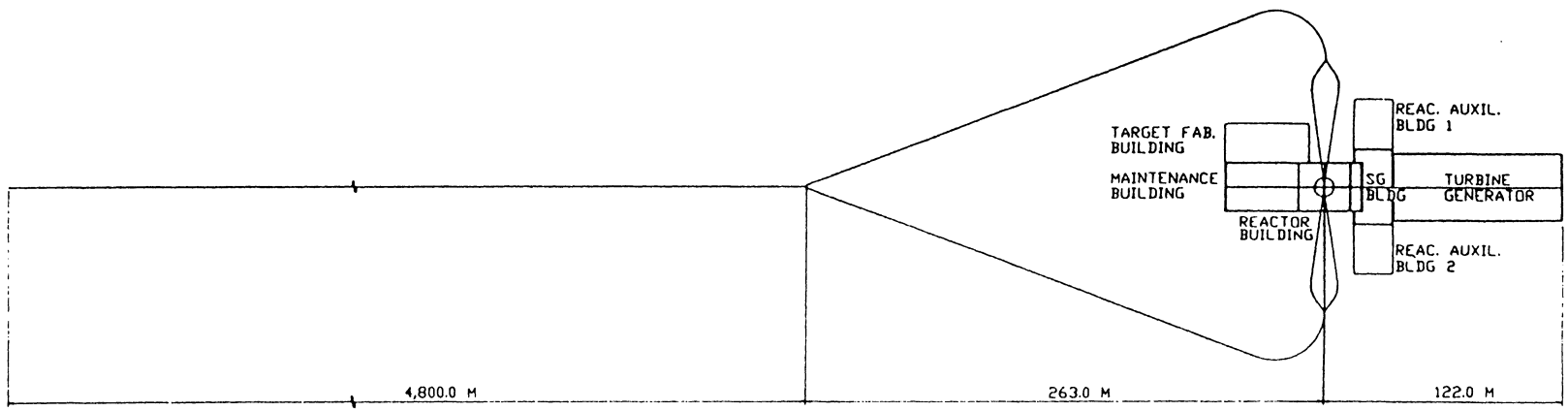

Fig. 2.19. Osiris power plant layout.

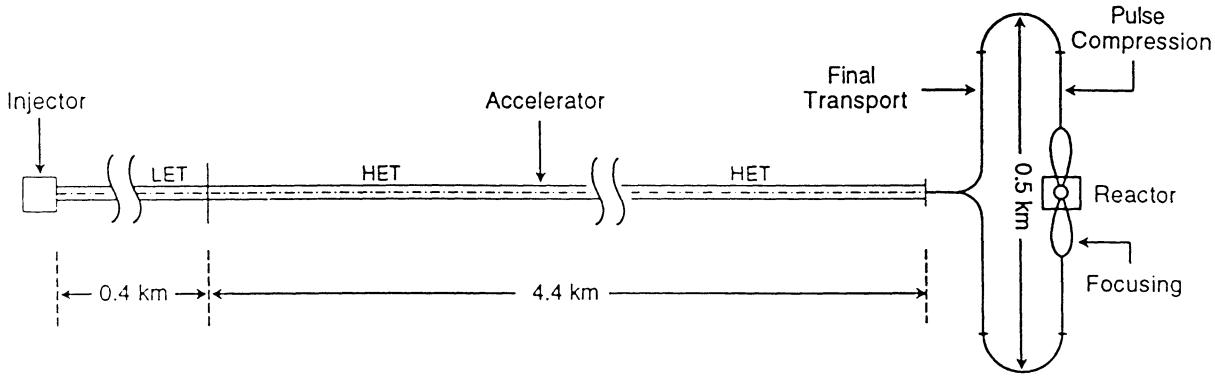

Fig. 2.20a. Heavy-ion driver tunnel layout.

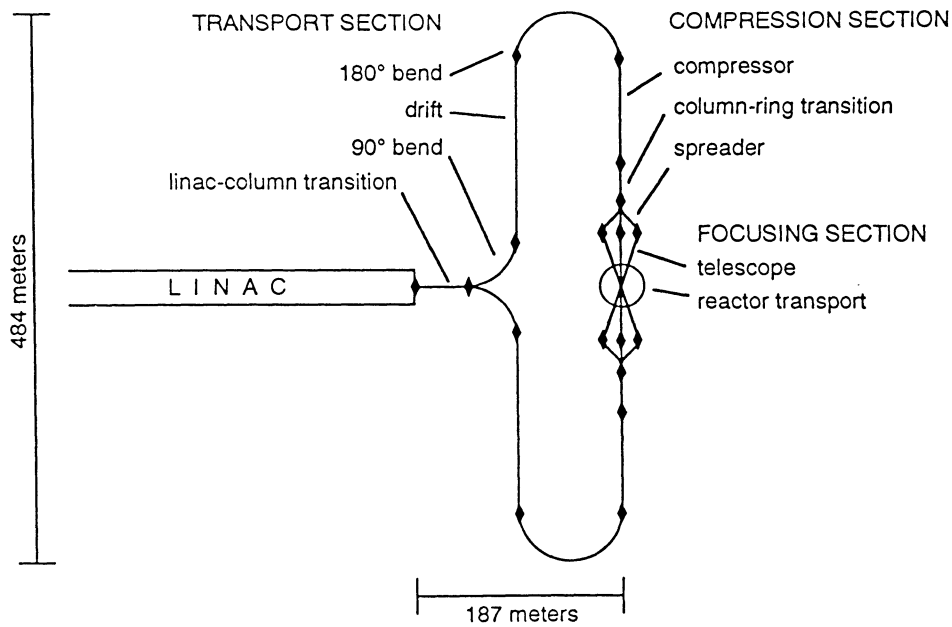

Fig. 2.20b. Final transport layout.

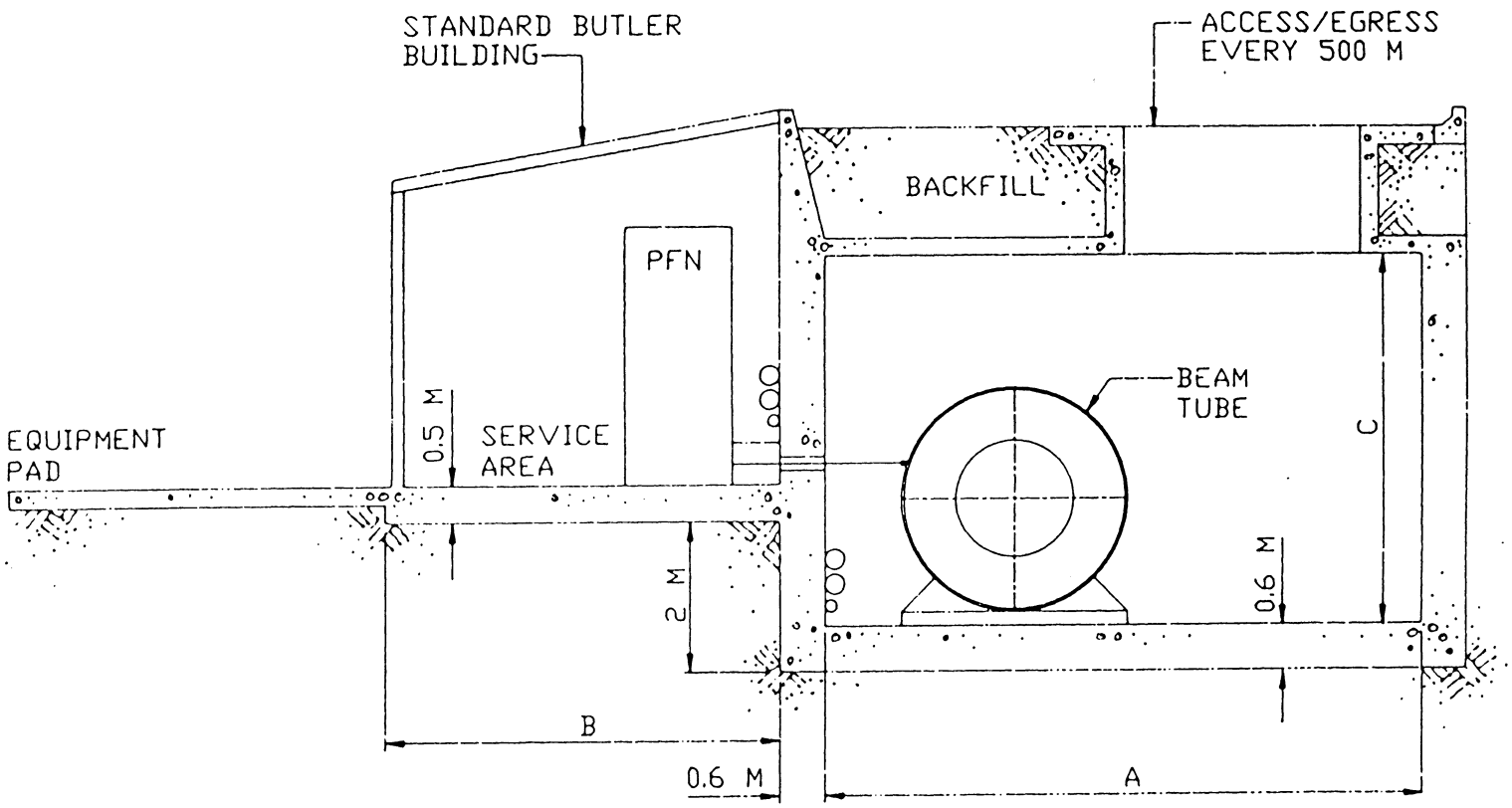

Fig. 2.21. Driver tunnel cross section.

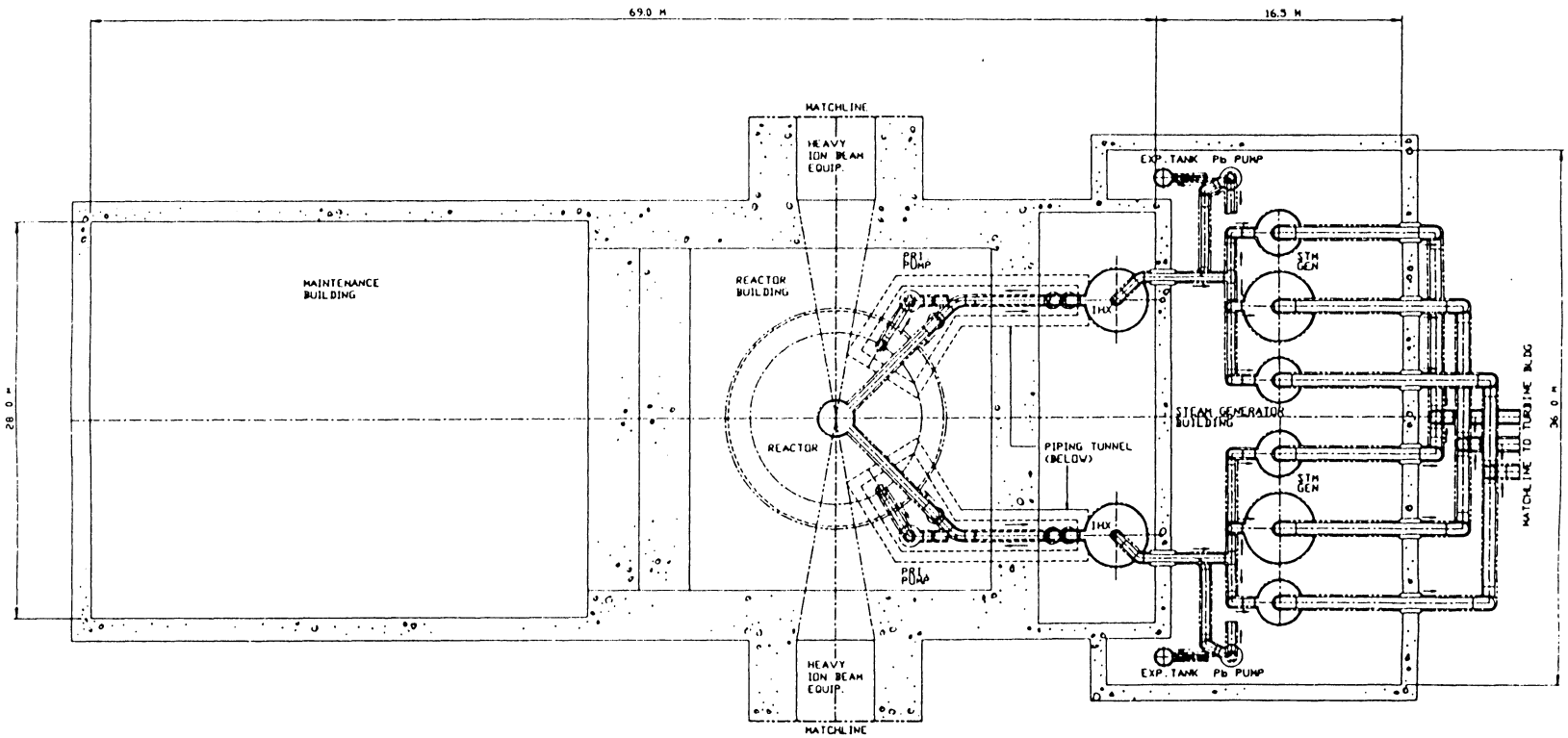

Fig. 2.22. Overhead view of Osiris reactor containment.

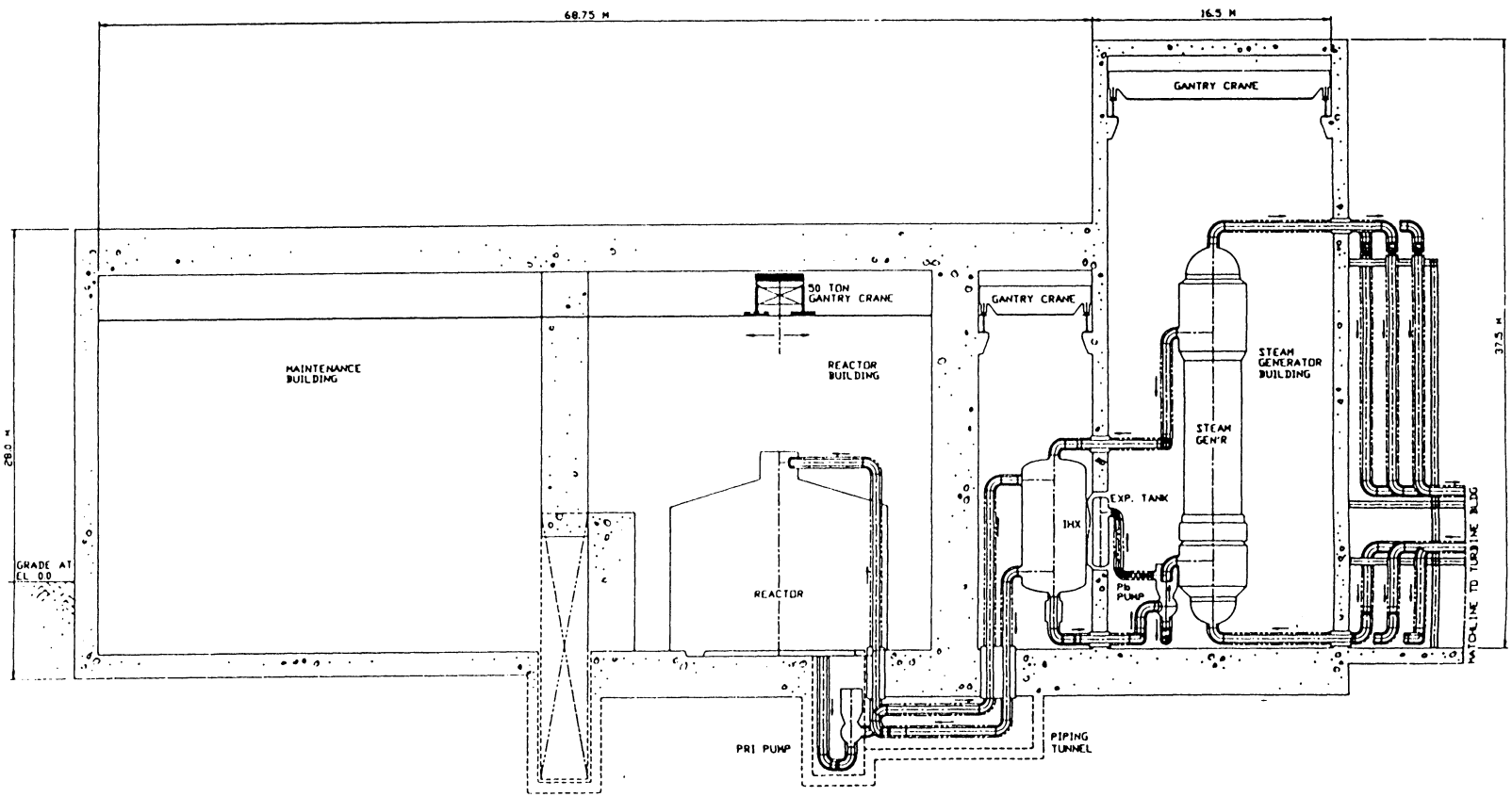

Fig. 2.23. Side view of Osiris reactor containment.

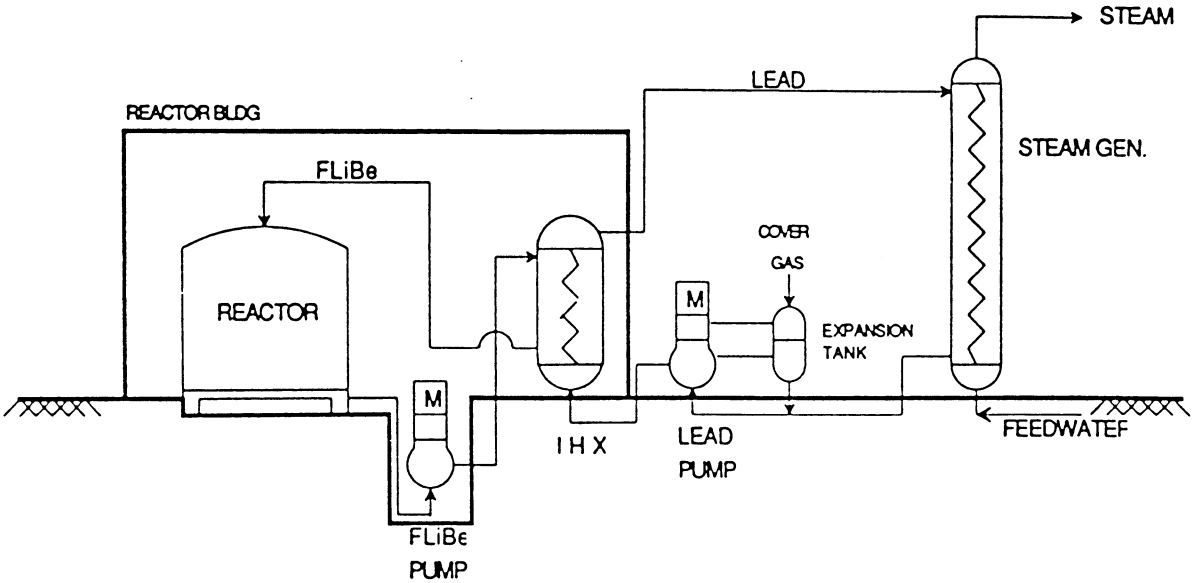

Fig. 2.24. Alternative 1 - Osiris HTS hydraulic profile.

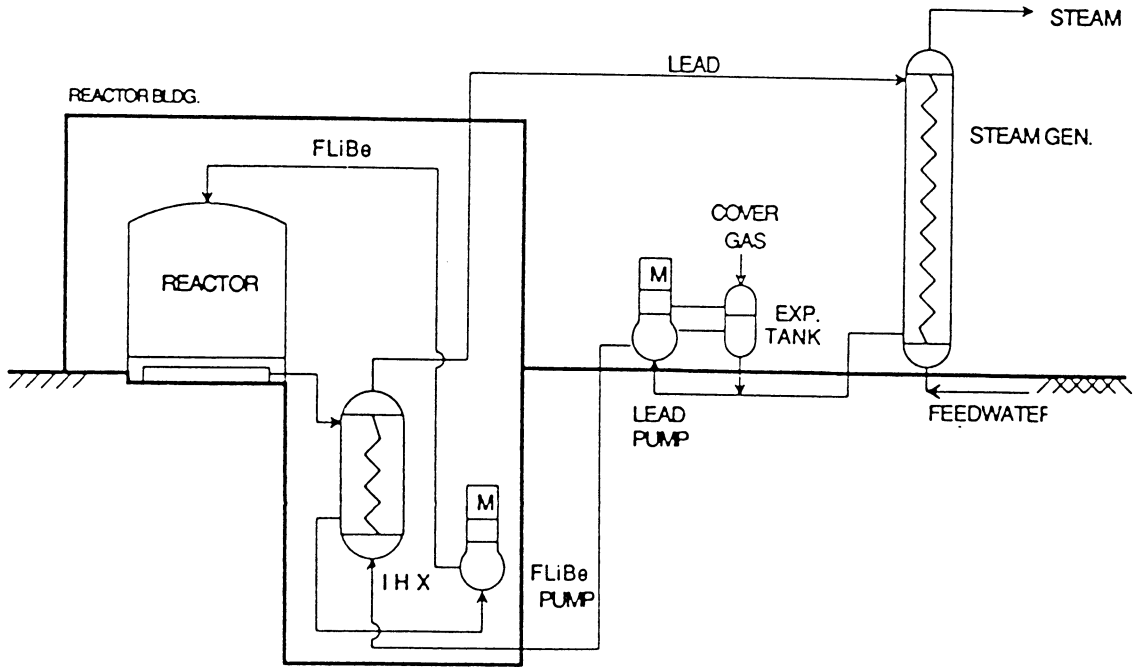

Fig. 2.25. Alternative 2 - Osiris HTS hydraulic profile.

Tritium Confinement Barrier. The reactor building provides a leak-tight barrier to tritium leakage into the environment. The leakage from the building can be reduced to limit the tritium leak rate to an acceptable level. The leakage from the building is generally controlled by properly sealing the penetrations, access doors, and equipment hatches. In addition to this, all the interior surfaces of the building walls, floors, and ceiling are coated with epoxy paint to minimize tritium permeation into the concrete. Similarly, all equipment surfaces are also painted with suitable coatings to minimize tritium permeation.

Vacuum Boundary. The external boundaries of the reactor and the beam lines serve as the vacuum boundary for Osiris. The vacuum pumping systems are included in the reactor and the heavy ion beam systems. The reactor building is maintained at near-atmospheric pressure with the help of an atmosphere cleanup system. A slightly negative pressure (approximately 0.5mm of mercury) is maintained in the building to avoid out-leakage of the potentially contaminated air.

Atmosphere Cleanup System. To maintain an equilibrium tritium concentration as well as to cleanup the tritium following an accidental leakage within the reactor building, an atmosphere cleanup system is provided. The system also maintains the tritium concentration within the building well below the maximum permissible level during maintenance operations. After processing by the system, the recovered tritium is pumped back into the tritum processing system provided to recover tritium from the blanket and coolant systems.

2.3.4.2 Other Facilities

A brief description of the other major facilities is given here and is shown in the Plot Plan (Fig. 2.19). Only an outline of these facilities is shown in the figure to indicate that facilities are needed to support the operation of the plant. No design has been developed for them at this stage.

Maintenance Building. This building is essentially an integral part of the reactor building. It is separated from the reactor hall during normal operation by a movable shield wall. The maintenance building houses the equipment for assembly and disassembly of the Osiris components and provides space for both irradiated and refurbished modules. The building is designed as an earthquake and tornado hardened structure.

Auxiliary Building. This building houses the reactor and heat transport system auxiliary equipment. These include auxiliary cooling system, plant electrical systems, heat tracing system,

coolant handling system, heating, ventilation, and air conditioning (HVAC) system, vacuum system as appropriate, etc. The building is designed as an earthquake and tornado hardened structure.

Target Fabrication Building. This building houses all the systems and components necessary for storage, fabrication, and delivery of the fuel pellets. The building is designed as an earthquake and tornado hardened structure.

Heavy Ion Beam Facility. This facility is shown in Figs. 2.19, 2.20, and 2.21. This facility is a five-kilometer-long tunnel to house the various stages (formation, acceleration, drift, etc.) of the heavy ion beams. A typical view of the tunnel is shown in Fig. 2.21. This was proposed by C. Fong of Lawrence Berkeley Laboratory.[2-36]

Steam Generator Building. A concept has been developed for this building as shown in Figs. 2.22 and 2.23. The tall structure of this building is dictated by the height of the steam generator. The building is designed as an earthquake and tornado hardened structure.

Turbine-Generator Building. The building is sized to house the 1129 MWe cross-compound turbine-generator and its auxiliaries, steam system components, feedwater heating and condensing system components, etc. The building is envisaged as a conventional building similar to those used in fossil-fired plants.