Plasma current start-up without central solenoid in STOR-M iron core tokamak and its application to D-^{3}He ST reactor

O.Mitarai （Tokai University, Kumamoto, Japan)

US-Japan Workshop on

Fusion Power Plants and Related Advanced Technologies

13-14 March 2014, University of California San Diego, USA

In collaboration with G. Tomney, E. Lewis, D. McColl, C. Xiao and A. Hirose

(Plasma Physics Laboratory, Department of Physics and Engineering Physics, Room 66,University of Saskatchewan,116 Science Place, Saskatoon, SK, S7N 5E2, Canada)

Contents:

1. Motivation

2. My previous studies on D-^{3}He reactors:

   My previous studies on D-^{3}He ST fusion reactor

3. Three versions of D-^{3}He ST reactors

   3.1. 1st version of CS-less D-^{3}He ST reactor

   3.2. 2nd version of D-^{3}He ST reactor with small CS

4. CS-less plasma current start-up experiments in the STOR-M iron core tokamak

5. 3rd version of D-^{3}He ST reactor with a small iron core

6. Summary and further problems

1.Motivation

Study of possibility of realization of a safer fusion reactor is urgent since Fukushima nuclear accident.

●Tritium has five disadvantages for fuel:
(1) No resource on the Earth, (2) Explosive gas, (3) Radioactive gas,
(4) Difficulty of measurements (5) Material permeation

● ^{3}He has two disadvantages for fuel:
(1) No resource on the Earth, (2) It is not frozen.

●Possible meltdown in fusion reactor

Decay heat :

Fission reactor : 210 MW : Meltdown is possible within few hours.
DT reactor: 20～40 MW : Possibility of meltdown
D-^{3}He reactor: 2～4 MW : No meltdown

Severe accidents: Vacuum chamber would be meltdown when the fusion reaction is not shut down as soon as possible when LOCA takes place.
It is very important to survey its possibility of an inherently safe fusion D-^{3}He reactor.

2. My previous studies on D-^{3}He reactors:

[1] High aspect ratio tokamak: (not suitable)

High aspect ratio tokamak such as ITER is not suitable for D-^{3}He operation, due to the higher toroidal field, and lower beta.

-->Wall reflectivity of the synchrotron radiation should be as large as possible as R_{eff}~0.99. When wall condition changes, ignition cannot be maintained.

[O. Mitarai, H. Matsuura and Y. Tomita, "Aspect ratio dependencies of D-^{3}He fueled tokamak reactors", Fusion Engineering and Design, Volume 81, Issues 23-24 , November 2006, Pages 2719-2724]

[2] Helical reactor: (not suitable)

It is not suitable for D-^{3}He operation because of small confinement factor.

[MITARAI Osamu, SAGARA Akio, et al. "Parameter Requirements for D-^{3}He Helical Reactors", Journal of Plasma and Fusion Research, Vol. 6 (2004) p303-305]

[3] Spherical tokamak reactor: (DT-ST is not suitable)

As DT ST has a larger neutron wall loading than that in HA tokamak , possibility of meltdown is very high. Therefore, DT-ST is avoided in my reactor study.

On the other hand, possibility of D-^{3}He ST fusion reactor is very high due to the lower toroidal field and high beta.

[O. MITARAI "A D-^{3}He spherical tokamak reactor with the plasma current ramp-up by vertical field" in "Nuclear Reactors, Nuclear Fusion and Fusion Engineering," Nova Science Publishers, Inc. (2009), Edited by A. Aasen and P. Olsson. (2009) p405−442]

My previous studies on D-^{3}He ST fusion reactor

ST fusion reactor has limited space for central solenoid (CS). But the vertical field and heating power can ramp up the plasma current as demonstrated in the following experiments. Therefore, essentially CS can be removed from ST.

[1] O. MITARAI, "Inductive Plasma Current Start-up by the Outer Vertical Field Coil in a Spherical Tokamak" Plasma Physics & Controlled Fusion, 41 (1999) 1469-1483.

[2] O. Mitarai, R. Yoshino and K. Ushigusa "Plasma current ramp-up assisted by outer vertical field coils in a high aspect ratio tokamak", Nucl Fusion 42 (2002) 1257-1272.

[3] O.Mitarai and Y. Takase "Plasma Current Ramp-up by the Outer Vertical Field Coils in a Spherical Tokamak Reactor", Fusion Science and Technology, Vol.43, No. 1 (2003) p67-90.

[4] S.Shiraiwa, S.Ide, S.Itoh, O.Mitarai, et al. "Formation of Advanced Tokamak Plasma without the Use of an Ohmic-Heating Solenoid", Physical Rev. Lett. Vol.92 Number 3, (2003) p035001-1-4

[5] O. Mitarai, Y.Takase, A.Ejiri, S.et al. "Plasma Current Start-up by ECW and Vertical Field in the TST-2 Spherical Tokamak" Journal of Plasma and Fusion Research, Vol. 80 No.07(2004) p549-550

[6] M. Ushigome, S. Ide, S. Itoh, E. Jotaki, O. Mitarai, et a,, "Development of completely solenoidless tokamak operation in JT-60U", Nucl. Fusion 46 No 2 (February 2006) 207-213

[7] MITARAI Osamu, NAKAMURA Kazuo, et al." Plasma current ramp-up experiments in QUEST" APFA (2010), J. Plasma Fusion Res. SERIES, Vol. 9 (2010) p100—105

[8] MITARAI Osamu, NAKAMURA Kazuo, et al." First Ohmic Discharge assisted with RF power in QUEST Spherical Tokamak" (2010)
Plasma and Fusion Research: Volume 6, 1402003 (2011)

[1st version of CS-less D-^{3}He ST reactor studied so far]

Plasma current ~ 90 MA is ramped up by the vertical field and heating power. Very long pulse operation due to the low resistivity of the high temperature plasma, and ignition are possible using the present experimental data such as IPB98y2 scaling. <u>However, initial plasma current start-up without CS was a big concern.</u>

[O. MITARAI "A D-^{3}He spherical tokamak reactor with the plasma current ramp-up by vertical field" in "Nuclear Reactors, Nuclear Fusion and Fusion Engineering," Nova Science Publishers, Inc. (2009), Edited by A. Aasen and P. Olsson. (2009) p405−442 : The same reference on page 4]

[2nd version of D-^{3}He ST reactor with small CS and A=2]

--> <u>High beta may not be achievable</u> from Lin-Liu criterion.

[3rd version of CS-less D-^{3}He ST reactor with small iron core]

based on ISFNT-paper 2013, Barcelona.

By installing the small iron core, <u>initial plasma current start-up becomes reliable</u> and subsequent current ramp-up by heating power and vertical field makes 100 MA possible. <u>As aspect ratio is smaller than 2, high beta operation is feasible.</u>
Iron core saturation could be managed as shown in STOR-M experiments.

3. Three versions of D-^{3}He ST reactors

3.1. 1st version of CS-less D-^{3}He ST reactor

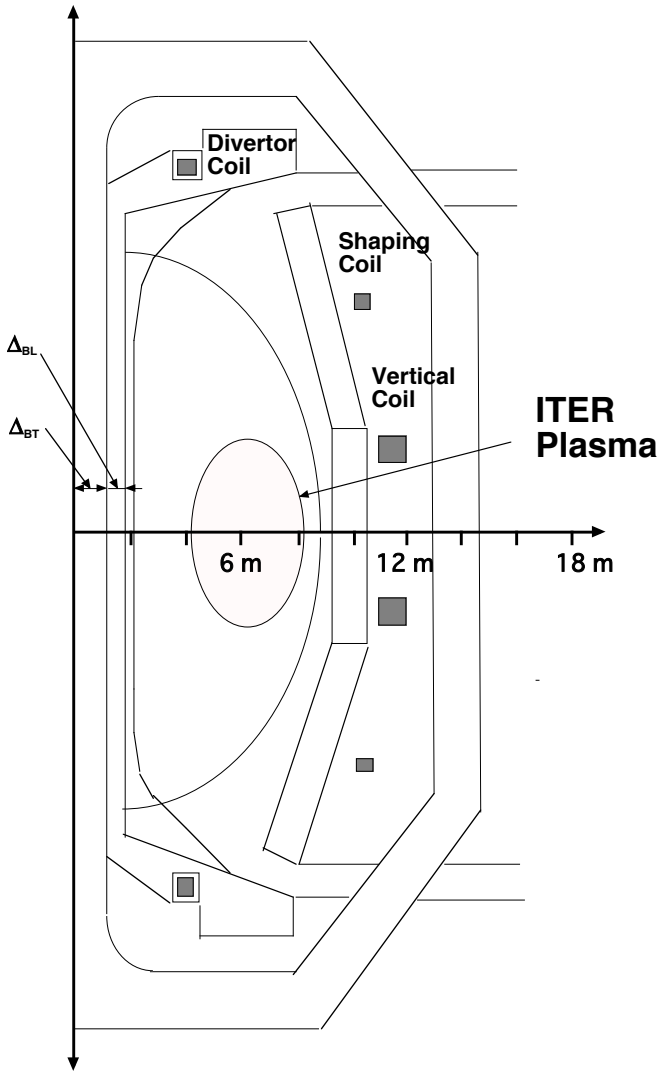

Advantage:

- In previous D-^{3}He ST reactor study, CS is completely removed to get the low aspect ratio.
- Higher beta can be obtained.
- Larger safety factor can be obtained.

Disadvantage:

- Without CS, no reliable plasma current start-up.
- Without CS, initial discharge cleaning is difficult. Long time may be necessary before main plasma operation.
- Maximum toroidal field in the inboard side is large due to the small radial build.

Analysis: Zero dimensional equations with fuel and ash particles, and ion and electron separate power balance equations.

Machine parameters D-^{3}He ST reactor: I_p=93MA:

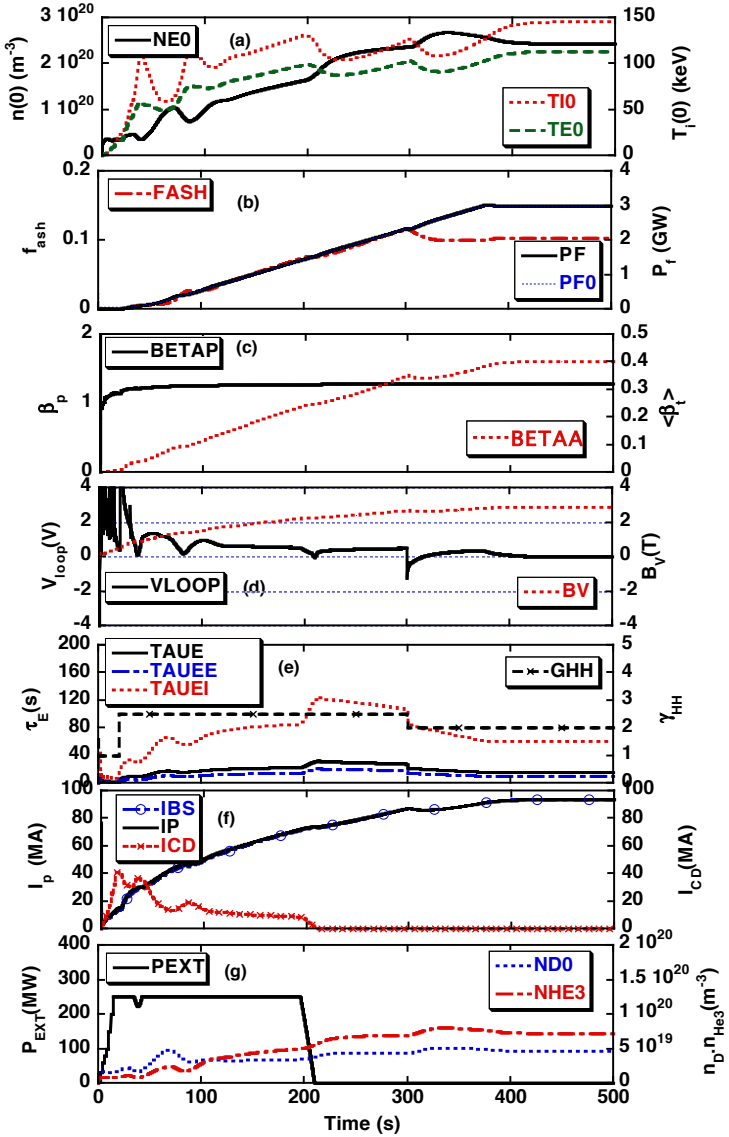

R=5.6 m, a=3.4m, B＝4.4 , A=1.64, κ=3

(R-a=2.4 m ～R+a=9.0m)

Initial D:^{3}He fuel ratio＝2/3 : 1/3

Steady D:^{3}He fuel ratio＝0.48 : 0.52

Heating power : 250 MW, P_n=60 MW

γ_{HH}=2.5～2(IPB98y2),

I_p～93 MA, ℓ_i=0.42, f_{BS}=1.0

F_{ion}=0.4,

τ_i/τ_e=6, T_i=145 keV T_e=113 keV

n(0)=2.43x10^{20} m^{-3}, n(0)/n_{GW}(0)=0.74

β～40 %, β_N～6.4, f_{ash}=10.3% (τ_p^*/τ_E=2)

Profile factor : a_n=0.5, a_T=1

Lin-Liu high beta criterion:

A=1.6, κ=3, β_t=46.2%, ℓ_i=0.24, β_N=8.2,

is satisfied.

3.2. 2nd version of D-^{3}He ST reactor with small CS

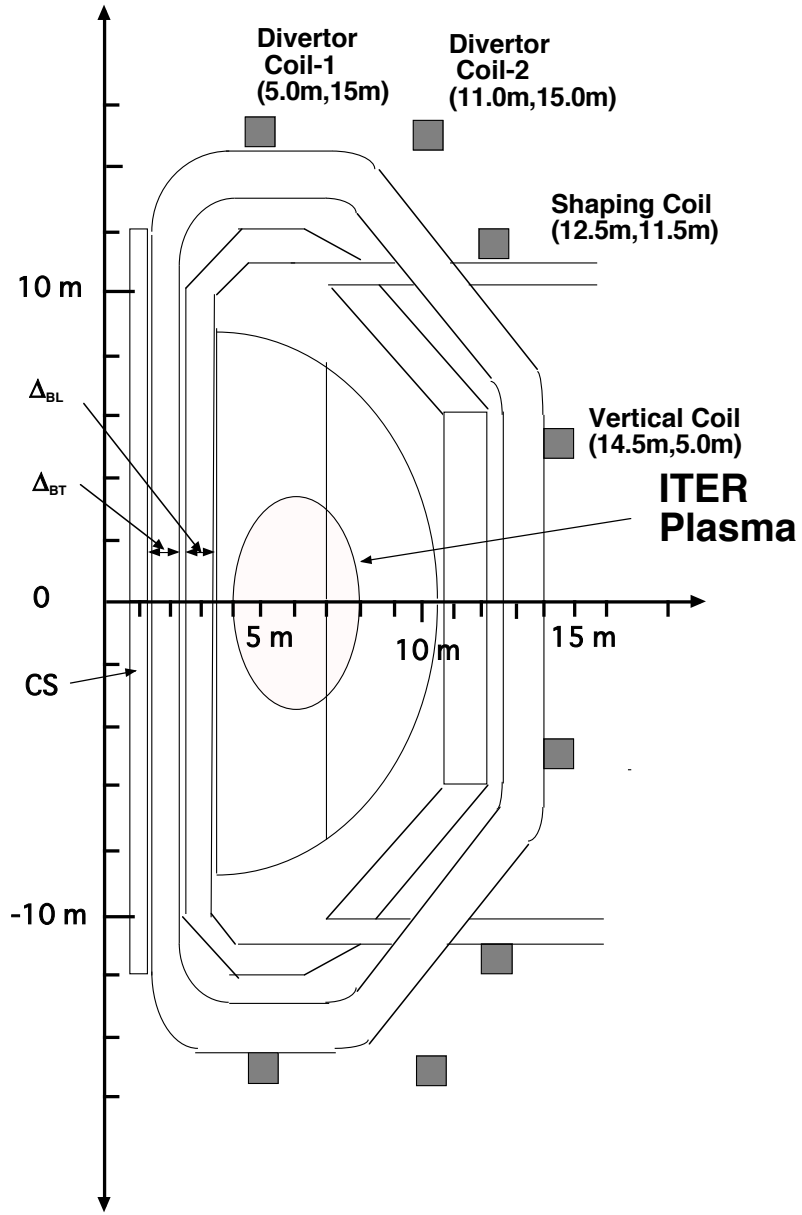

R=7.0m, a=3.5m, B＝4.5, A=2, κ=2.5

(R-a=3.5 m ～R+a=10.5m)

- **Almost all the plasma current ramp-up by vertical field**

Advantage of small CS installation (R_{CS}=1m) :

- **<u>Normal PF coil layout</u>**
- **Ohmic discharge cleaning is possible**
- **<u>No initial plasma current start-up problem</u>.**
- **Plasma shape could be controlled by externally.**
- **Current hole could be reduced.**
- **Can be used for Pulse extension.**
- **Maximum toroidal field is reduced.**

Disadvantage of small CS installation

--> Increase in major radius, aspect ratio A=2

--> reduction of operation regime:

Plasma current, Safety Factor,

Beta value, Elongation

Machine parameters of A=2, D-^{3}He ST reactor B_t=4.5T, I_p=70MA

$\tau_{D\text{-}He3}/\tau_E$=2, τ_{ash}/τ_E=2, R_{eff}=0.8, CS assist, $\Phi \sim \pi r^2 B_{cs} \sim 60$ Vs (B_{cs}~10T)

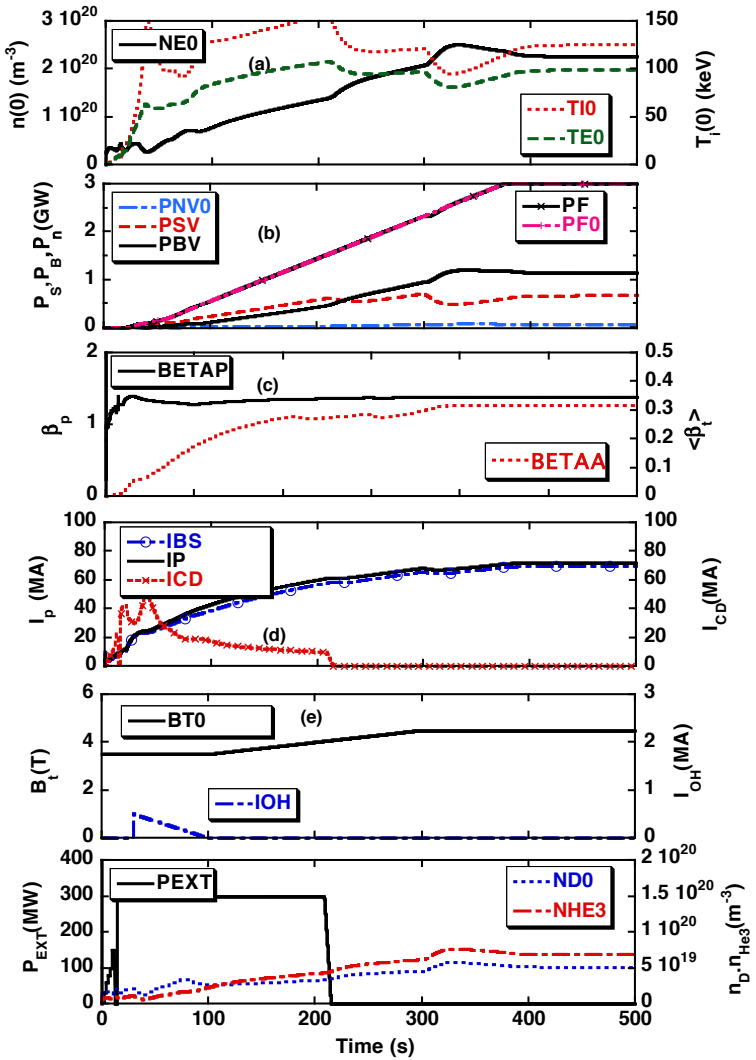

CS-assisted plasma current ramp-up helps to reach ignition for the reflectivity of 0.8

P_n=72 MW,

I_p～72 MA, ℓ_i=0.3,

T_i=125 keV, T_e=99 keV

n(0)=2.26x10^{20} m^{-3}, n(0)/n_{GW}(0)=0.95

β～32 %, β_N～6.9, f_{ash}=9.2%

A=2, κ=2.5,

Biggest problem は：

Lin-Liu high beta criterion is not satisfied.

A=2, κ=2.5, β～24 %, β_N～7.1, q_{95}=5.67

κ=3.0, β～36 %, β_N～7.4, q_{95}=5.37

ST is sensitive to an aspect ratio.

4. CS-less plasma current start-up experiments in the STOR-M iron core tokamak

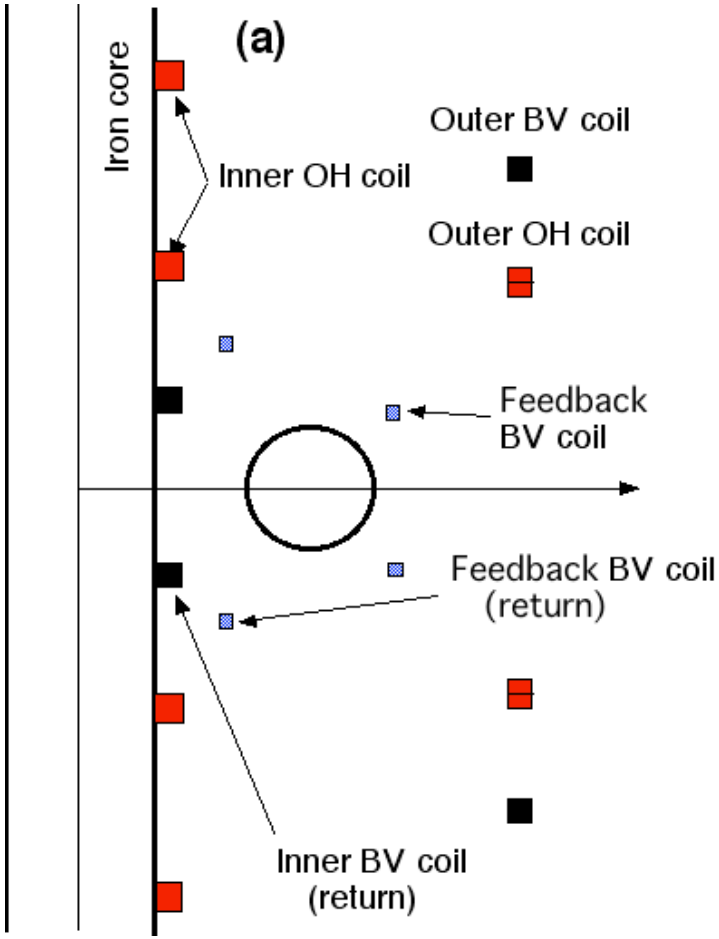

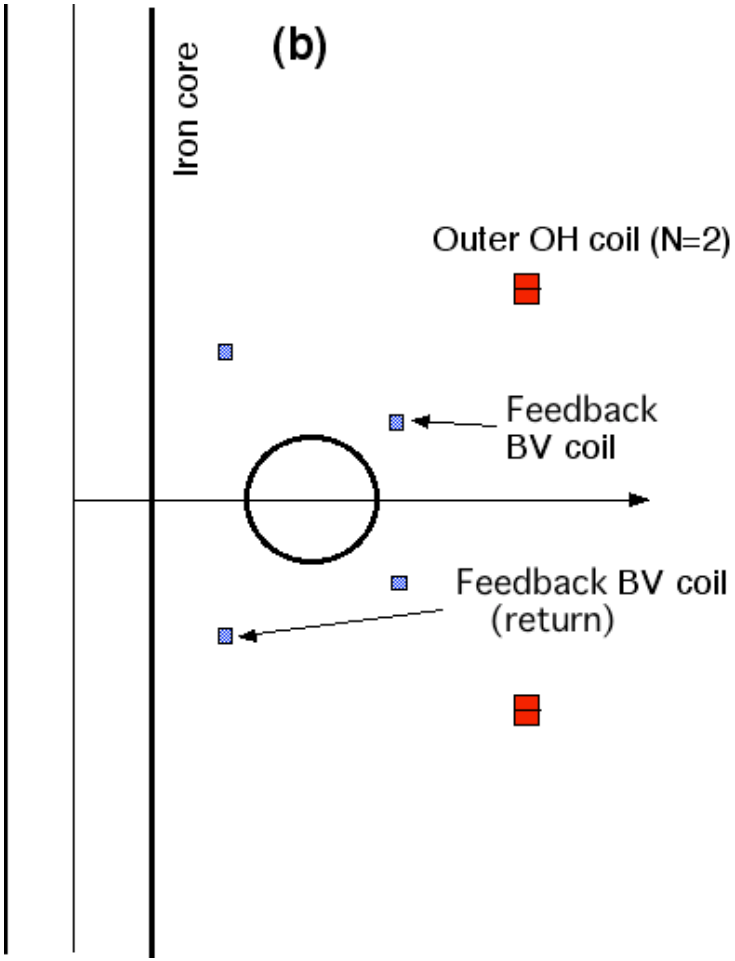

Normal tokamak operation

CS-less operation

Initially field null, Outer OH, Saturation

STOR-M iron core tokamak（U of Saskatchewan, Canada)

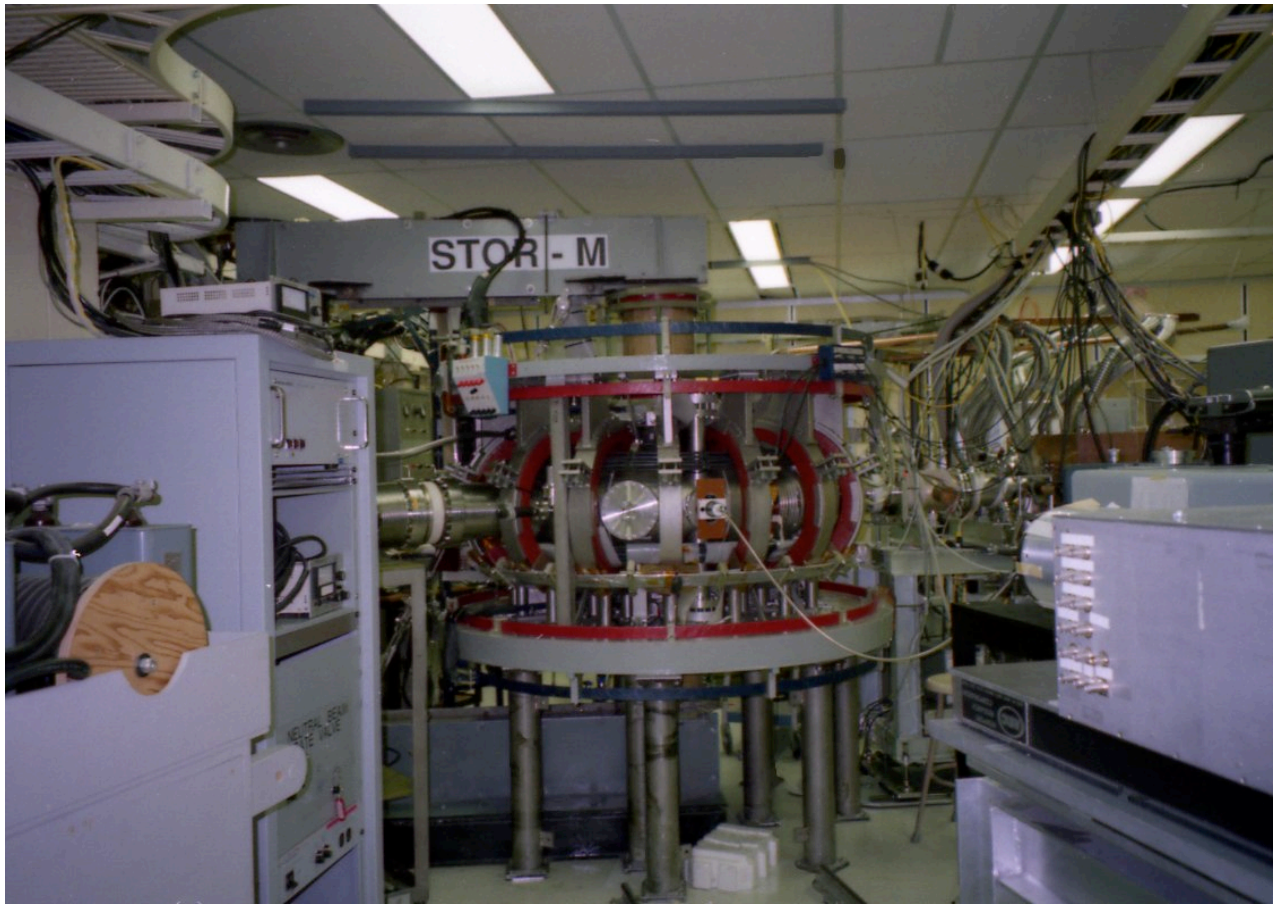

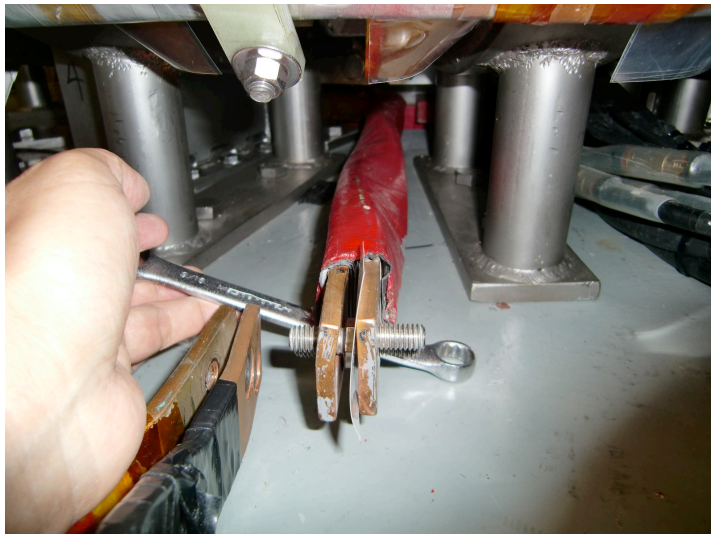

STOR-M (R=0.46m, a=0.12 m and B_t=0.6 T) is a conventional iron core tokamak.

Typical plasma current is ～20 kA.

Inner OH coils and Bv coils are removed.

Power supply circuit for outer OH coil with 3rd Bank

The magnetizing current $I_M = I_{OH1} - I_1$ **with** $I_1 = I_p / N$

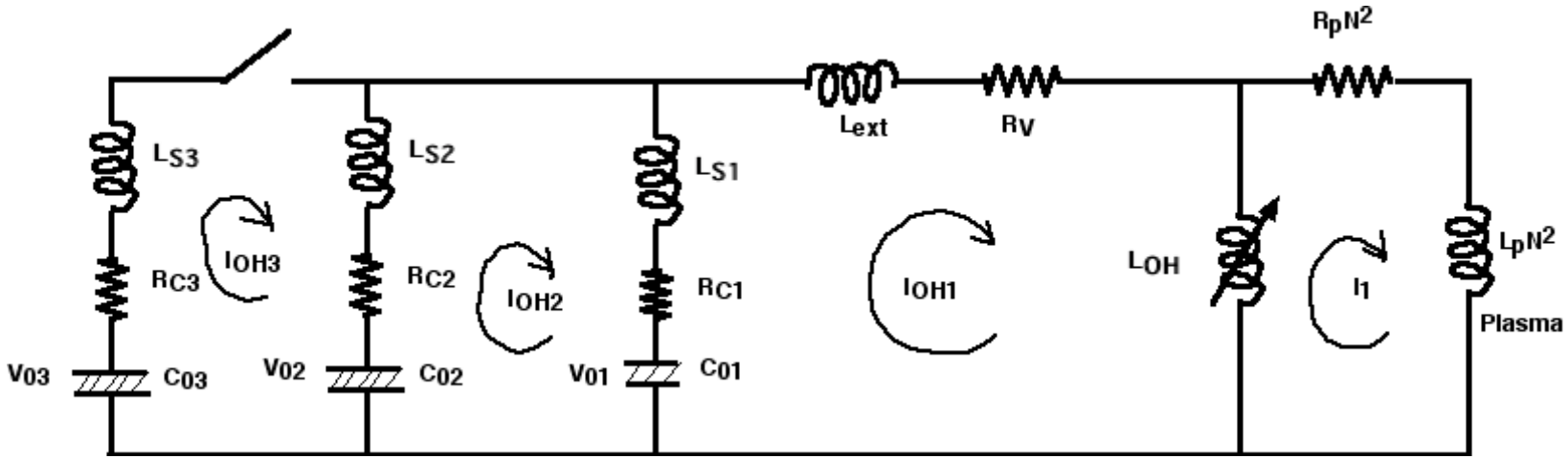

Outer OH is activated, and eventually iron core saturates. It looses the plasma current driving force. Third bank is fired for additional plasma current ramp-up or sustainment.

Picture of 3rd Bank

CS-less plasma current start-up and iron core saturation phase with 3rd bank application (summer in 2012 by Kakenhi-(c))

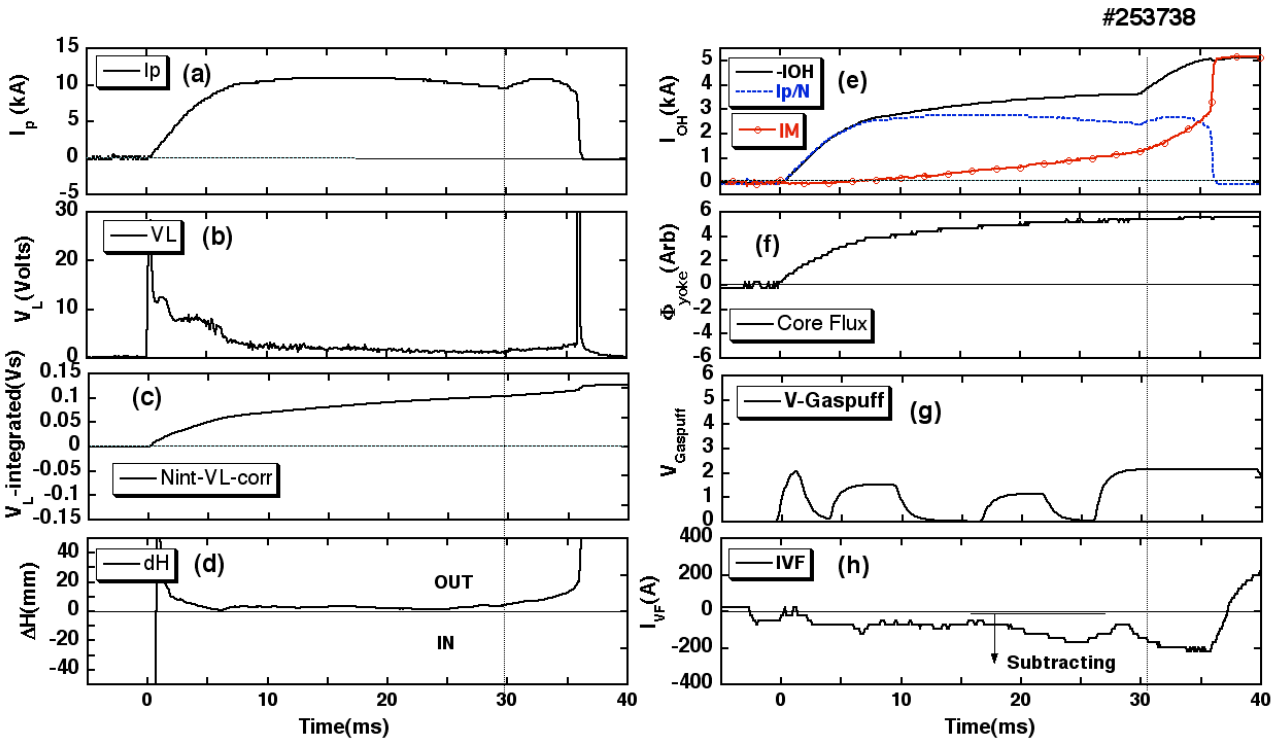

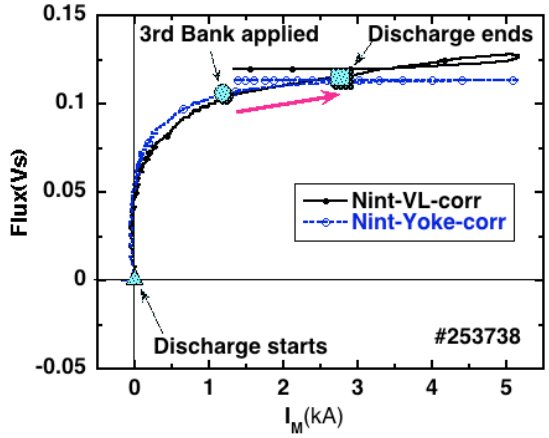

- As initial field is almost null even if bias current exists, plasma current start-up is easy.
- As actually applied vertical field is larger than the equilibrium field, the compensation by the feedback coil is necessary. (Also next figure)
- When iron core is almost saturated judging from the magnetizing current of $I_M=I_{OH}-I_p/N$, and flux measurement, 3rd bank is applied, and plasma current is further increased.
- On the hysteresis curve, 3rd bank is applied at saturation phase of I_M＝1.0～2.8kA.

Iron core characteristics and image field during discharge

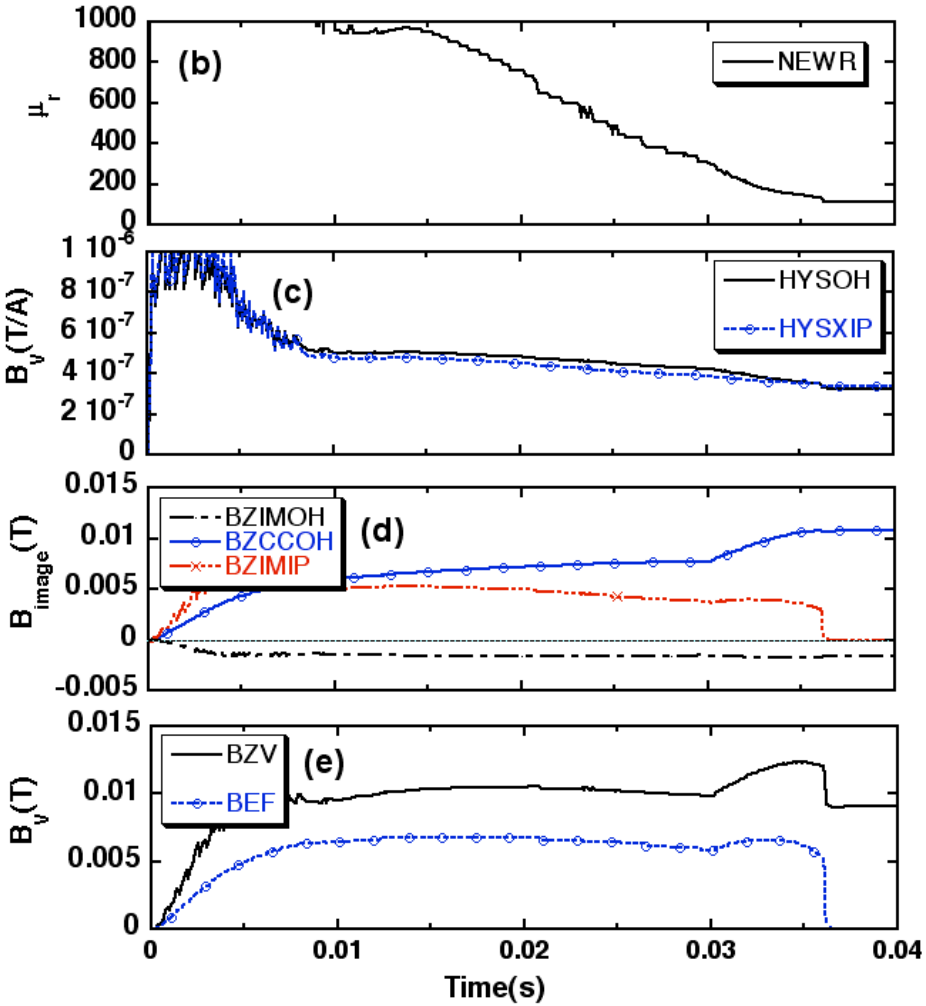

From the hysteresis curve, the inductance L_{OH} of the outer OH coil and the relative permeability μ_r is obtained

$$L_{OH}(I_M) = N\frac{d\Phi}{dI_M} = \frac{N^2 S}{\ell_{iron}}\frac{dB}{dH} = \frac{N^2 S}{\ell_{iron}}(\mu_r - 1)\mu_o$$

Then, image magnetic fields from the iron core are calculated by the infinitely long iron core model

$$B_z(r,z) = \frac{\mu_o I_c}{2\pi}\left[\frac{1}{\sqrt{(R_c+r)^2+(z-H_c)^2}}\left\{\frac{R_c^2 - r^2 - (z-H_c)^2}{(R_c-r)^2+(z-H_c)^2}E(h)+K(h)\right\}\right.$$
$$\left.-2R_c\int_0^{+\infty}\frac{(\mu_r-1)ka_c I_0(ka_c)I_1(ka_c)}{(\mu_r-1)ka_c K_0(ka_c)I_1(ka_c)+1}K_1(kR_c)K_0(kr)k\cos\{k(z-H_c)\}dk\right]$$

where a_c is the iron core radius,

$$h = \sqrt{\frac{4R_c r}{(R_c+r)^2+(z-H_c)^2}}$$

- As relative permeability μ_r reduces but shows the partial saturation, image field from the PF coils is not completely 0. → B_v compensation during 3rd Bank phase.
- Equilibrium field is smaller than the actually applied field. → Subtracted by FB B_v.

For comparison: CS-less plasma current start-up and iron core saturation phase without 3rd bank application

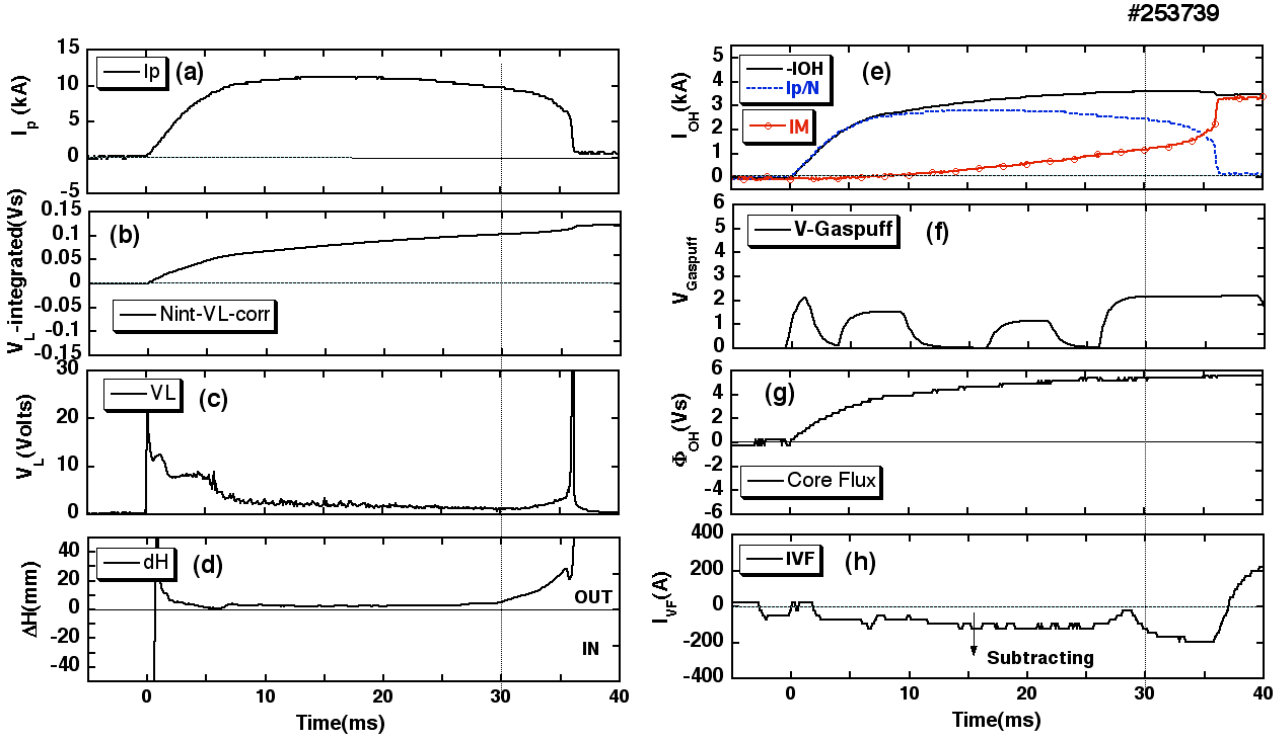

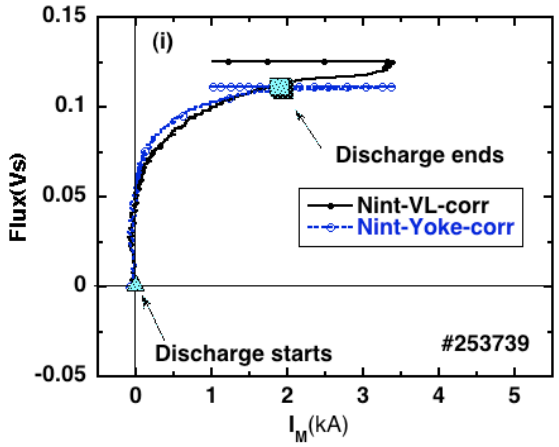

- **When 3 rd Bank is not applied, discharge is terminated at I_M＝2 kA.**
- **Iron core saturation reduces the current drive capability at the end.**

Operation scenario in an ST reactor

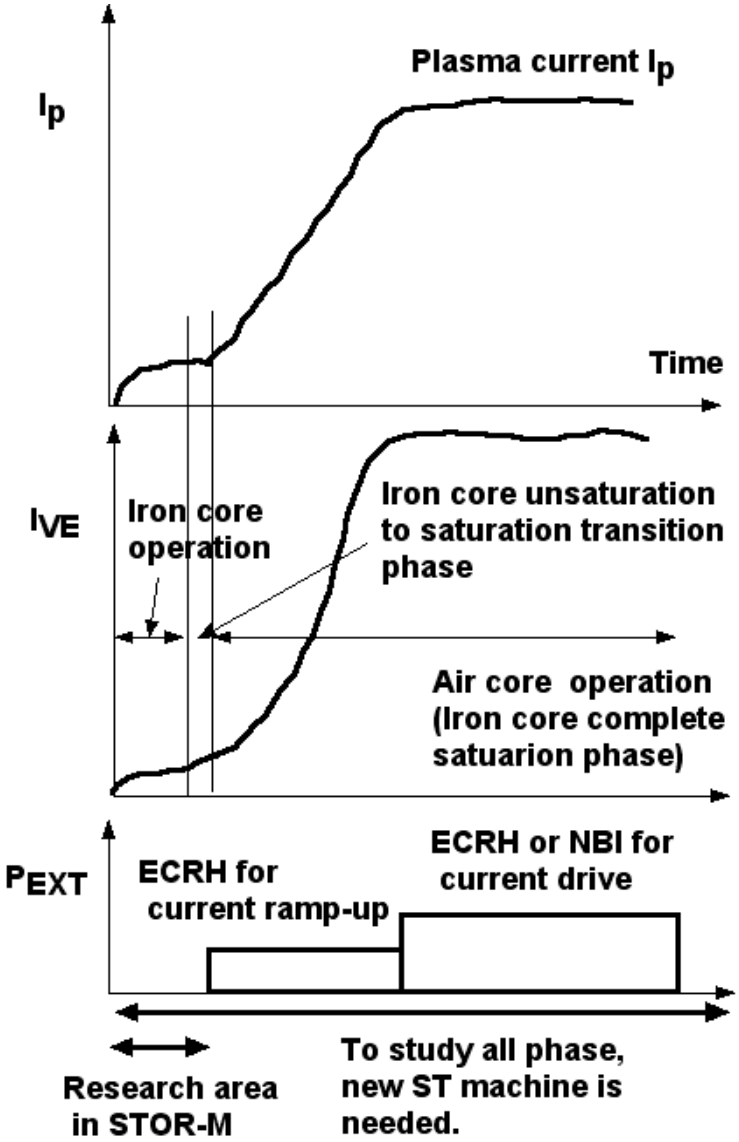

[1] Very reliable plasma current is started-up by iron core.

[2] Plasma current is ramped-up after iron core saturation by heating power and the vertical field

[3] Steady state is maintained by the bootstrap current with small current decay.

Current decay is very slow in the high temperature D-^{3}He ignited plasma.

5. 3rd version of D-^{3}He ST reactor with a small iron core

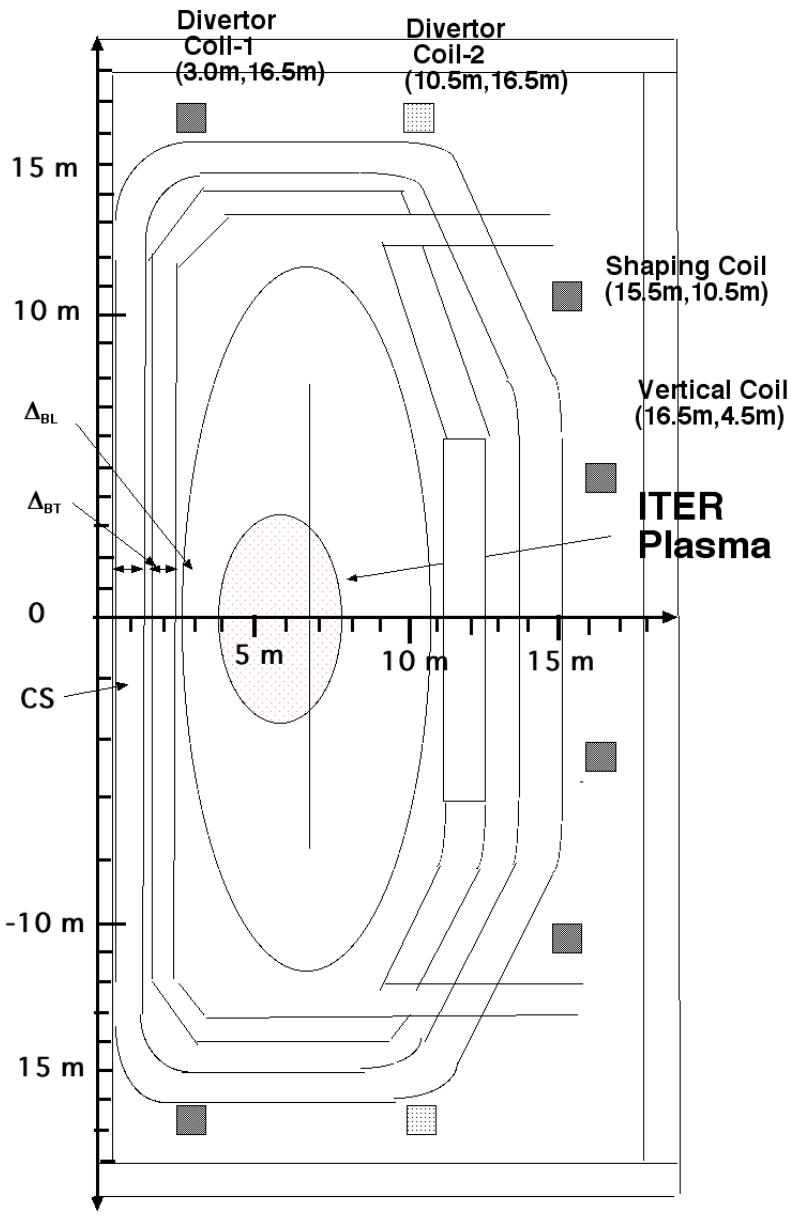

Radial build :

Iron core radius: $\Delta_i = 0.5m+0.1m=0.6m$

Toroidal coil: $\Delta_{BT}=1m+0.1\ m=1.1m$

Inboad blanket: $\Delta_{BL}=0.1+0.6+0.1m=0.8m$

Total : $\Delta_i+\Delta_{BT}+\Delta_{BL}=2.5\ m$

$a = R - (\Delta_i+\Delta_{BT}+\Delta_{BL})$

(1) A=R/(R-2.5)=1.6 --> R=1.6R-4 -> R=4/0.6=6.67m

(2) A=R/(R-2.5)=1.7 --> R=1.7R-4.25-> R=4.25/0.7=6.07m

Major radius: R=6.7m I_p**=100 MA**

Minor radius: a=4.2 m κ**=2.8** b= κa=11.76m

A=R/a=1.59 $\underline{\kappa}$ =3.0 b= $\underline{\kappa}$a=12.6m

R-a=2.5 m ～R+a=10.9m

Iron core flux : $\Phi = 2\left(\pi R_i^2 2\right) = 2\left(\pi 0.5^2 2\right) = 3.14Vs$

Initial plasma current : $I_p=\Phi/L_p$～1MA

Lin-Liu high beta criterion:

A=1.6, κ=3, β_t=46.2%, ℓ_i=0.24, β_N=8.2,

κ=2.5, β_t=29.7%, ℓ_i=0.25, β_N=7.69

κ=2.8, β_t=39.6% (Allowable beta)

PF coil currents using the circular ring model for circuit analysis

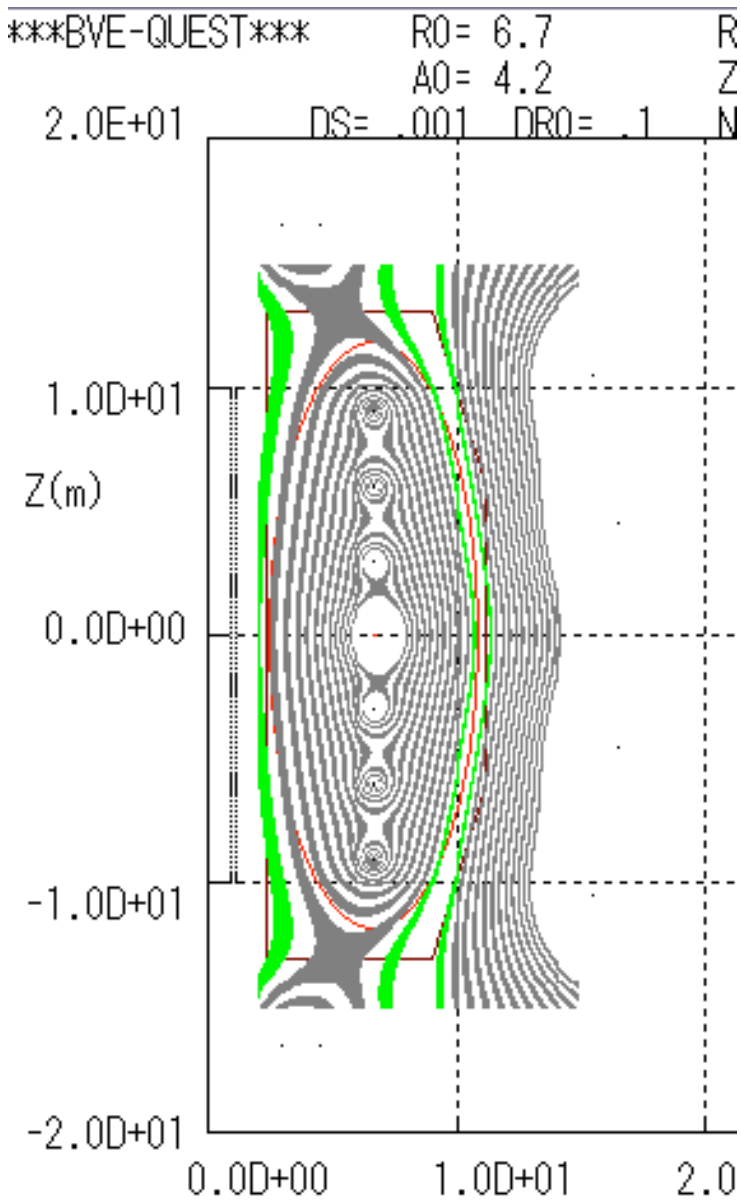

I_p=100MA

PF31 : R=3m H=16.5m

M_{PPF31}=0.272x10^{-6} H

B_{PPF31}=0.148x10^{-8}/AT

I_{PFF31}=40 MA

PF17 : R=16.5m, H=4.5m

M_{PPF17}=10.01x10^{-6} H

B_{PPF17}=7.405x10^{-8}/AT

I_{PFF17}=15 MA

PF26:R=15.5m H=10.5m

M_{PPF26}=6.27x10^{-6} H

B_{PPF26}=4.239x10^{-8}/AT

I_{PFF26}=15 MA

Ignition in D-^{3}He ST reactor with small iron core

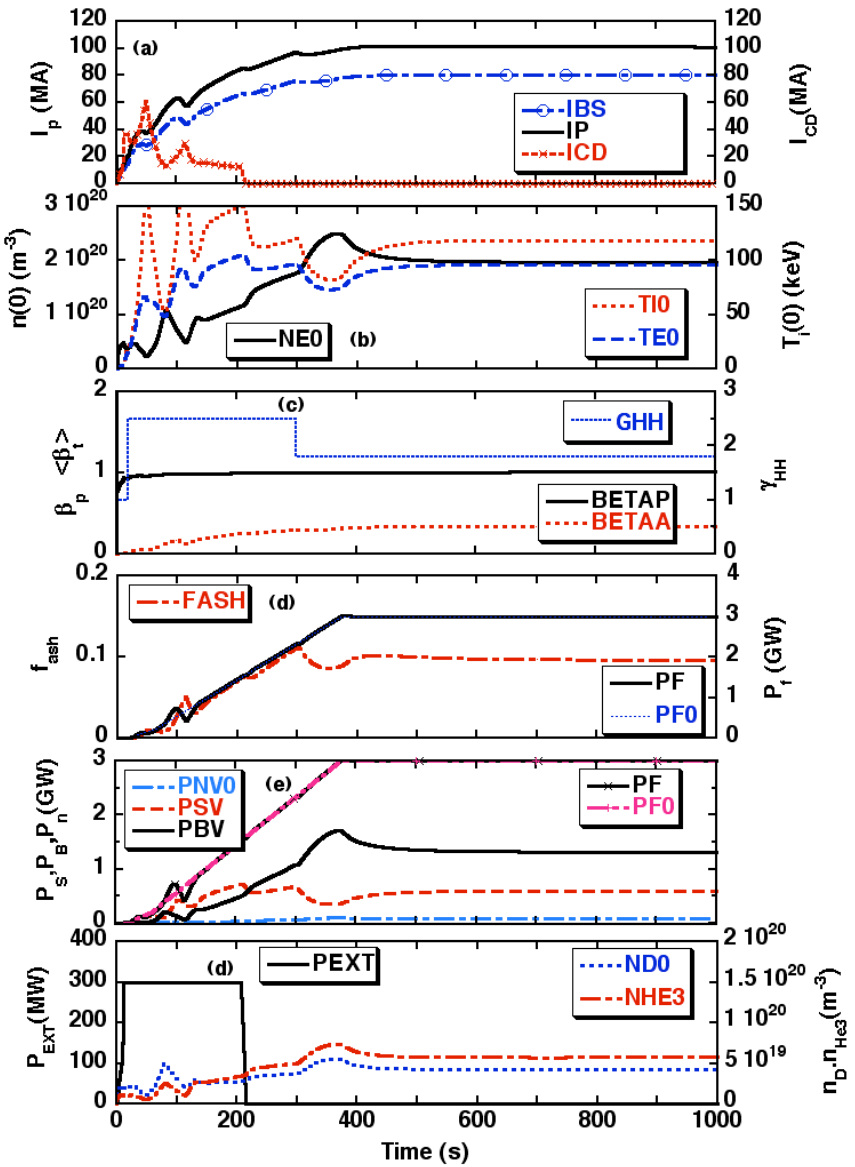

R=6.7m,a=4.2 m, κ=2.8, A=R/a=1.59,

I_p=100 MA, f_{BS}=80%, q_{MHD}～5, ℓ_i=0.3

P_f=3 GW, P_{BV}=1.3 GW, P_{SV}=0.47 GW, P_n=77 MW

B_t=3.5T --> 4.0T（Maximum toroidal field 18T）

Wall reflectivity：R_{eff}=0.8 ：

No current drive.

Heating power：300 MW

Initial plasma current by iron core：I_{p0}=1MA

γ_{HH}=2.5～1.8(IPB98y2), τ_E～20s, Z_{eff}=1.77

F_{ion}=0.4 (Ion heating by Nuclear Elastic Scattering of 14 MeV proton: Prof. Matsuura），

τ_i/τ_e=6, T_i=118 keV, T_e=96 keV

n(0)=1.97x10^{20} m^{-3}, n(0)/n_{GW}(0)=0.85

β～33 %, β_N～5.5, f_{ash}=9.6%

τ_p^*/τ_E=2, n_D:n_{He}=0.45:0.55

Profile：a_n=0.5,a_T=1

Heat flux：Γ_h=0.78 MW/m^2

Neutron wall loading：Γ_n=0.03 MW/m^2

Divertor heat flux：Γ_{div}=12 MW/m^2 (Δ=1m 90 deg）

Operation Scenario

Iron core: 1 MA
Heating power and vertical field: 100 MA
Bootstrap current: 80 ~ 90 %
Slow plasma current decay time: ~8 h

Quasi-continuous cyclic operation with a thermal storage

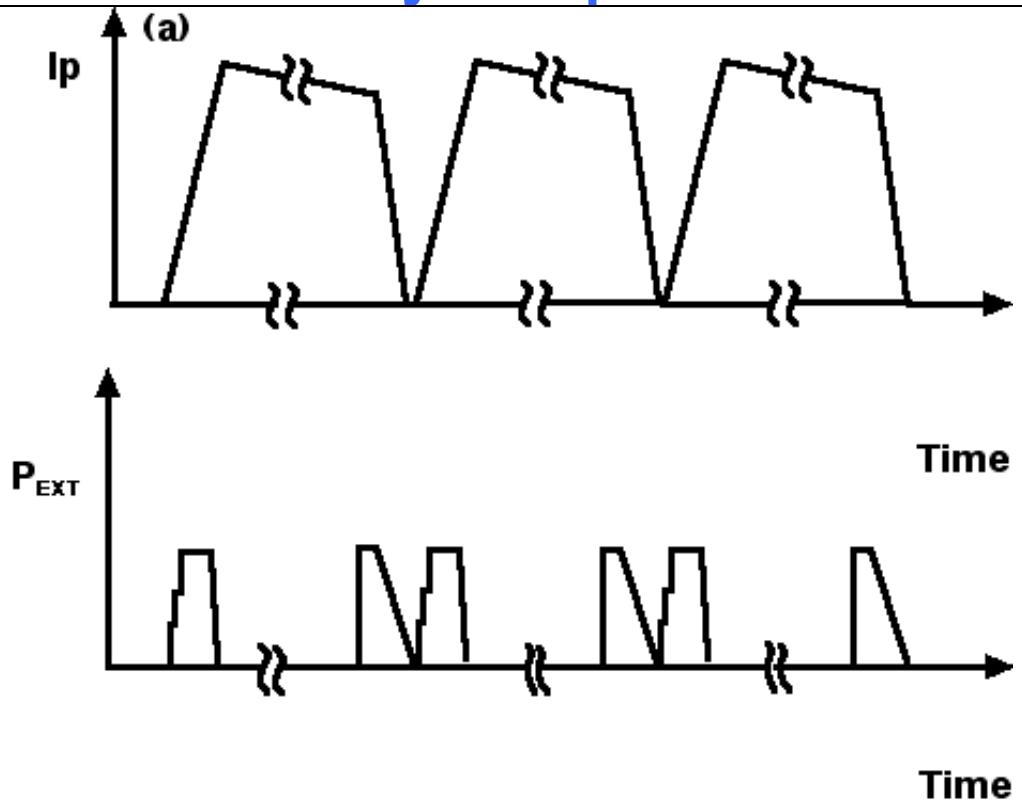

Schematic waveform of the plasma current of D-^{3}He ST reactor

6. Summary and further problems

6.1. Summary

- CS-less plasma current start-up by the outer OH coil was successful in the STOR-M iron core tokamak. Plasma current sustainment during the iron core saturation phase was also successful. --> Initial plasma current start-up problem in ST without CS has been resolved.
- Based on this experimental result, D-^{3}He ST ignited reactor with a small iron core was proposed (R=6.7m, a=4.2 m, κ=2.8, A= 1.6, B_t=4.0T, I_p=100 MA and β～33 %).
- Iron core to 1 MA, vertical field ramp-up to 100 MA
- Further improvement is required for iron core D-^{3}He ST reactor
  - @Reduction of heating power
  - @Increase of bootstrap current fraction for longer pulse length
  - @Reduction of divertor heat flux and neutron wall loading

6.2. My further studies on related works for D-^{3}He ST reactor

- Continuation of STOR-M iron core saturation experiments on dependence of the turn number (2014 summer, U of S, Canada)
- Continuation of study of the plasma current ramp-up of D-^{3}He ST reactor with small CS and divertor coils (in association with QUEST experiments).
  --> Further optimization is necessary.

6.3. General further issues on D-^{3}He ST reactor

- Assumption of "$\tau_p/\tau_E \leq 2$" is reasonable due to I-mode achievement in ALCATOR-CMOD (High energy confinement, and L-mode for particle confinement). And I-mode has no power degradation. --> I-mode should be studied actively in ST.

- Disruption-free tokamak plasma is necessary for large plasma current ~100MA.

- Thermal storage unit must be equipped for continuous power generation. Development is going on for the renewable energy study.

- "Biggest challenge" of D-^{3}He ignited plasma is "fueling". As plasma temperature is higher than 100 keV, pellet or CT cannot penetrate into the plasma. (Prof. Takahashi (Gunma-university) calculated roughly: It is almost impossible to fuel into a D-^{3}He reactor plasma !!!)

New concept for fueling is necessary for advanced reactor such as D-^{3}He and D-D fusion reactor.

Summary of my research on reactors

	D-T	D-^{3}He (Fueling?)	D-D (Fueling?)
Helical reactor	○	x	
High aspect ratio tokamak	○ (Disruption?)	marginal △ ?	
Low aspect ratio tokamak (ST)	△ (meltdown?) (Disruption?)	○ ?	

Thank you