Japan-US Workshop on Fusion Power Plants and Related Advanced Technologies
with participations from China and Korea
February 26-28, 2013 at Kyoto University in Uji, JAPAN

Assessment on safety and security for fusion plant

University of Tokyo
Y. Ogawa

Contents

1. Task Force Committee on Fusion Energy Assessment at JSPF
2. Decay Heat Problem
3. Safety analysis of fusion reactor
4. Safety issue related with tritium

Task Force Committee on Fusion Energy Assessment
at JSPF (The Japan Society of Plasma Science and Nuclear Fusion Research)

(1) Purpose

The accident of nuclear power plant at Fukushima Diichi has brought terrible damages, and a lot of public people has been evacuated. Since a fusion reactor is a plant to harness fusion energy, we should carefully pay attention to safety issues related to nuclear energy, as well. It is worthwhile to reconsider the safety issues related with fusion reactor. In addition, since the accident of nuclear power plant has drawn attention to energy policy in Japan, we should explain the role of fusion energy to the public.

From these viewpoints the JSPF has organized the task force committee, in which these issues (i.e., safety problem in the fusion reactor and the role of the fusion energy) should be discussed so as to summarize an assessment to the development of fusion energy.

(2) Members

@ Executive board members

- Y. Ogawa (Univ. of Tokyo: Chair), S. Nishimura (NIFS), H. Ninomiya (JAEA), A. Komori (NIFS), H. Azechi (Osaka Univ.), H. Horiike (Osaka Univ.), M. Sasamo (Tohoku Univ.), K. Shimizu (MHI)

@ Experts

- JAEA: K. Tobita, I. Hayashi, Y. Sakamoto, N. Tanigawa, R. Someya
- NIFS: A. Sagara, T. Muroga, T. Nagasaka, T. Tanaka
- Universities: T. Yokomine, T. Sugiyama, R. Kasada
- Industries: K. Okano, T. Kai

@ Observers: H. Yamada (NIFS), S. Kado(Univ. of Tokyo)

Contents of Report (December 2012)

1. Role of fusion energy in 21st Century
   1.1 Energy problem and energy policy
   1.2 Characteristics of fusion energy and introduction scenario
2. Evaluation on safety issues for fusion plant
   2.1 Safety issue on ITER
   2.2 Safety issue on fusion plant
3. Radioactivity on a fusion reactor
   3.1 Decay heat problem of a fusion reactor
   3.2 Radioactive waste
4. Safety analysis for a fusion reactor
   4.1 Safety analysis codes and V&V experiments
   4.2 Safety issues for solid breeder blankets
   4.3 Safety issues for liquid breeder blankets
5. Safety aspect on tritium
   5.1 Environmental behavior of tritium
   5.2 Biological effect of tritium
   5.3 Measurement of environmental tritium
   5.4 Safety analysis of tritium
6. Summary

Basic Principle for Safety Securement at Nuclear Plant

・Basic principles for safety securement at fission reactors

Stop a chain reaction

Cool down a fissile fuel

Confine radioactive isotopes

Accident at Fukushima Daiichi Nuclear Power Plants

・Chain reaction has stopped ＜＝ 「**Stop**」

・Cooling of fuel rod due to decay heat was insufficient ＜＝ 「**Cool down**」

・Radioactive isotopes was released in the environment ＜＝ 「**Confine**」

Decay Heat Problems In Fusion Reactors

Decay heat for fusion DEMO reactor (3 GW)

By Y. Someya (JAEA)

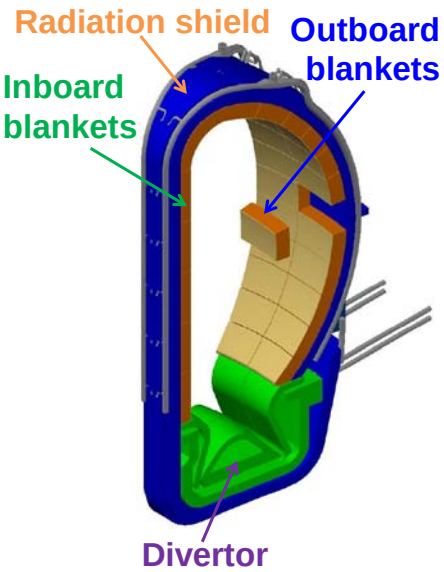

Fusion power	3.0 GW		
Time	Stop	1 day	1month
OB blanket	30.87	3.88	1.42
IB blanket	8.58	1.13	0.41
Divertor	**13.1**	**5.97**	**1.16**
Radiation shield	1.79	0.34	0.08
Total decay heat	**54.1**	**11.3**	**3.1**
$P_{D.H.}/P_F$	**1.8 %**	**0.4%**	**0.1%**

MW

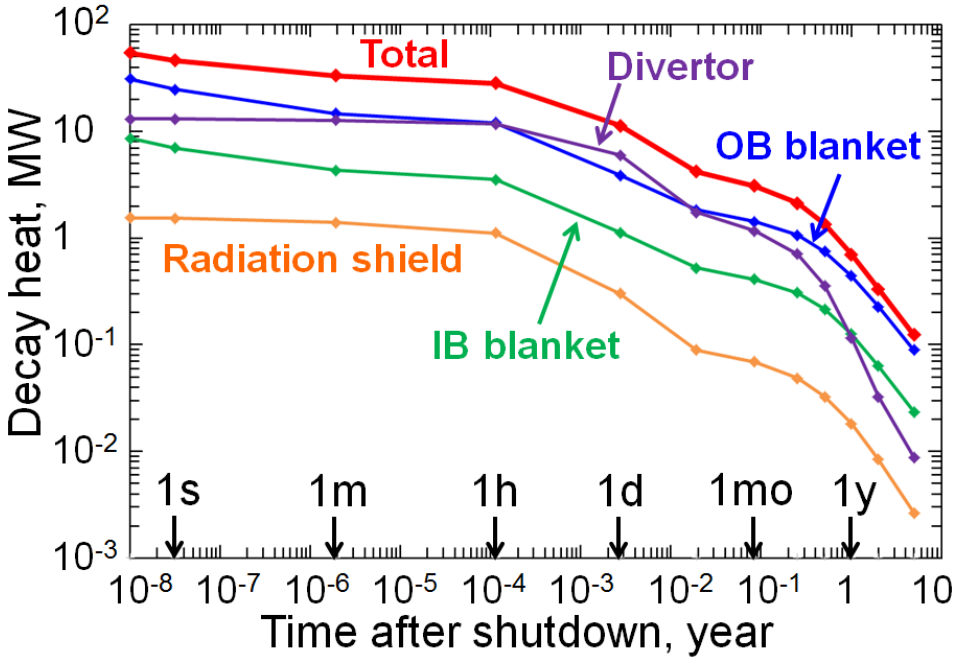

＞Divertor produces the largest portion of decay heat at 1 day.

- **Blanket：First wall（F82H）**
  ⇒ dominant：^{56}Mn (2.58 h)
- Divertor：Tungsten（W）
  ⇒ dominant：^{187}W (1 day)

Comparison of decay heat to Fukushima Daiichi Nuclear Plant

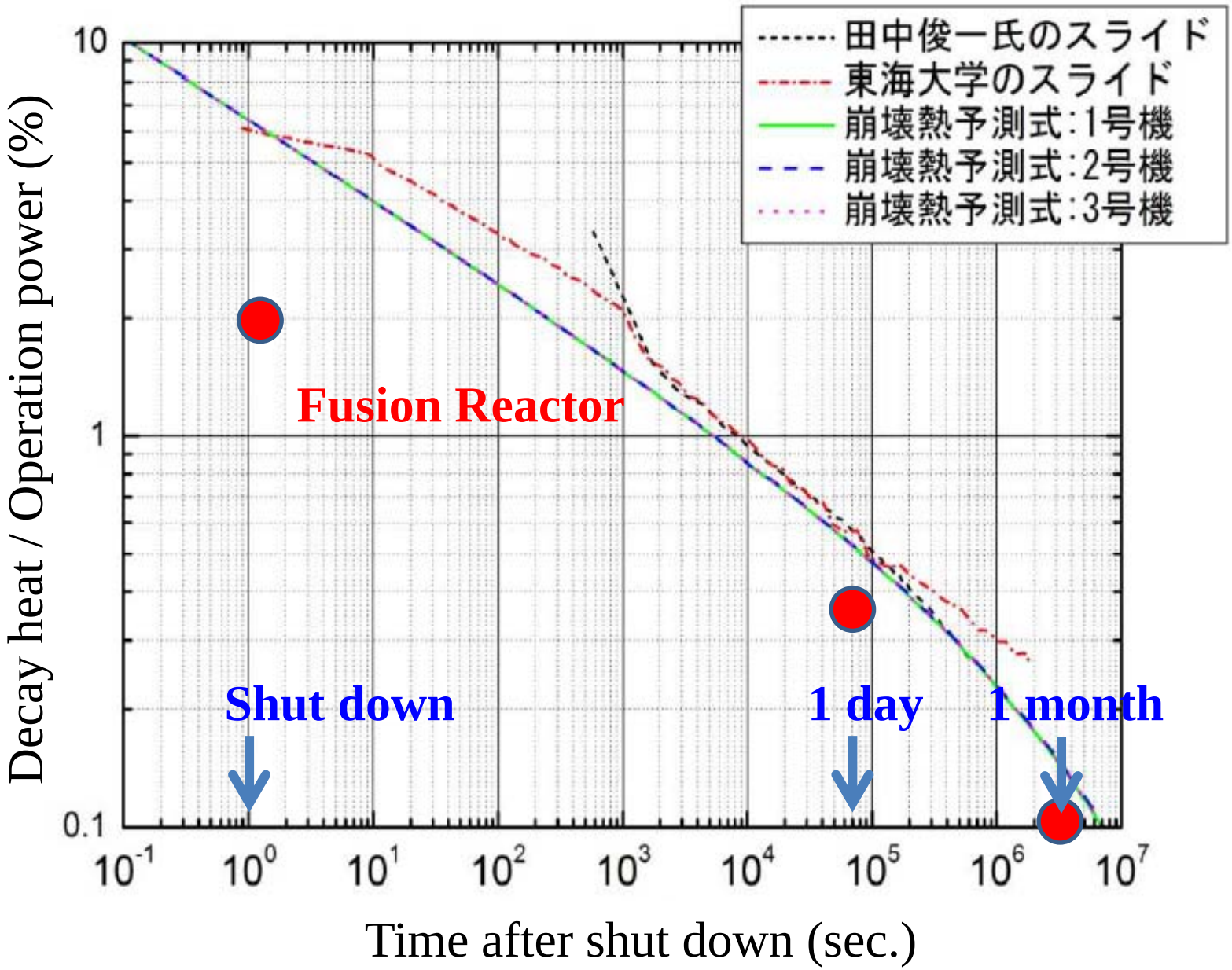

Decay heat density for W

By Y. Someya (JAEA)

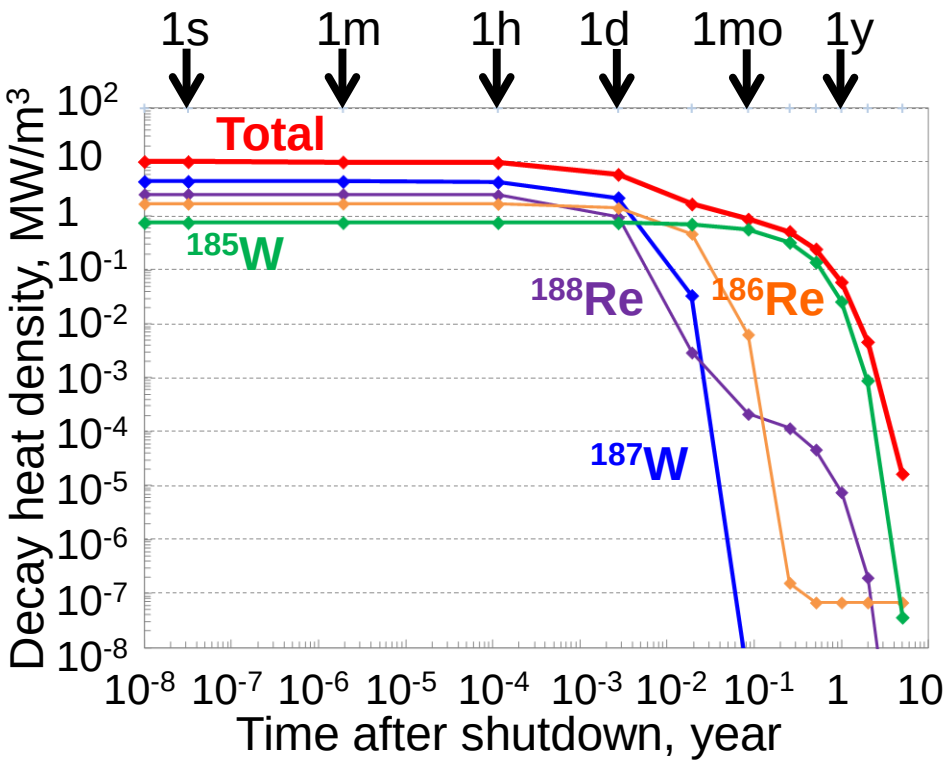

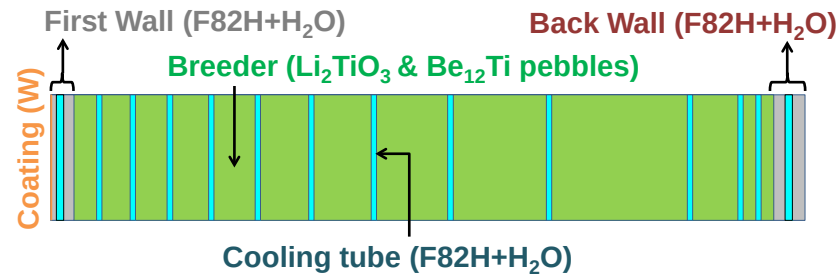

≪Dominant nuclides≫

✓ $^{187}_{74}W : (n,\gamma)$ reaction

(time < 1 day)

✓ $^{185}_{74}W : (n,\gamma)$ reaction

$: (n,2n)$ reaction

(1day < time < 1 year)

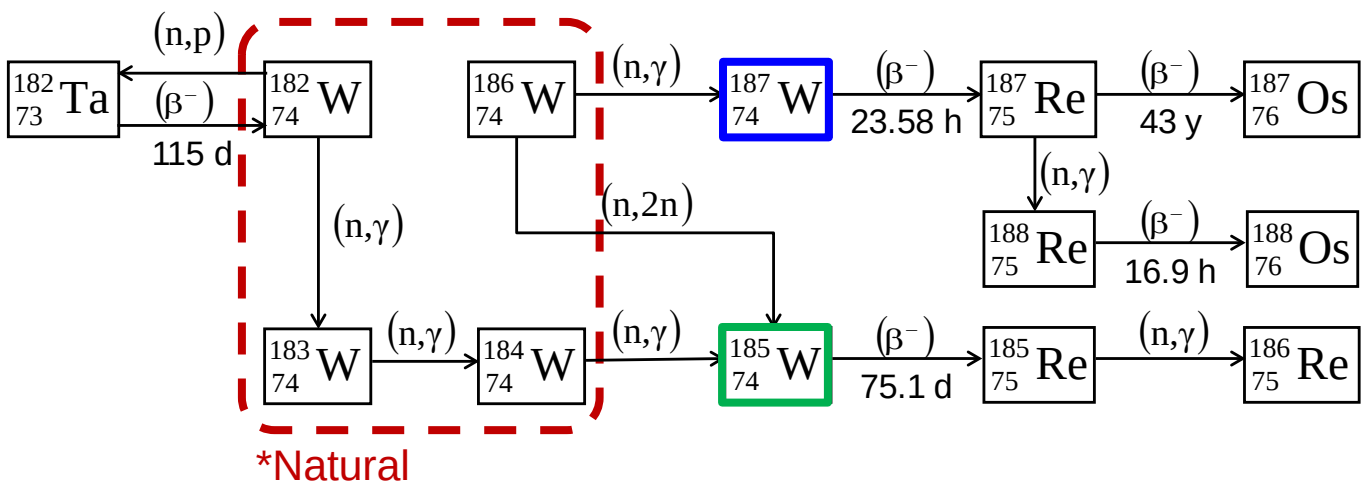

Decay Heat of Breeding Blanket

By Y. Someya (JAEA)

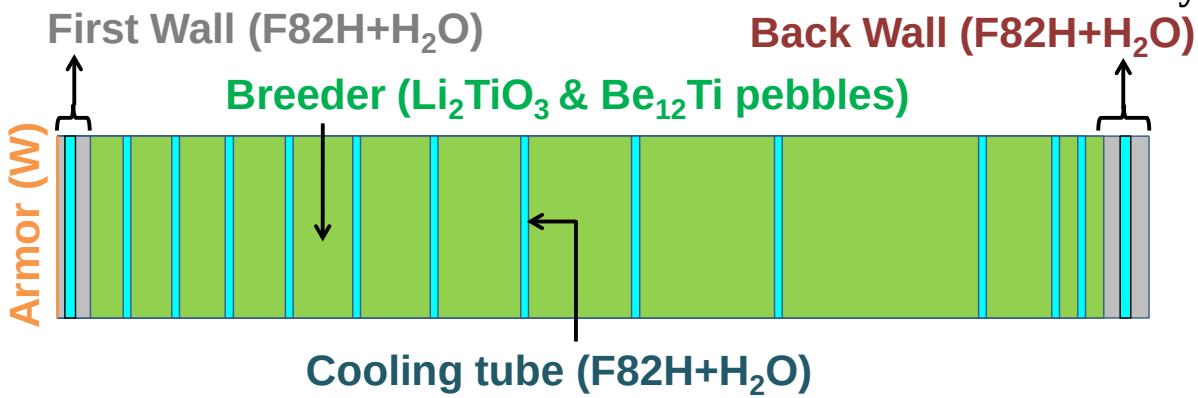

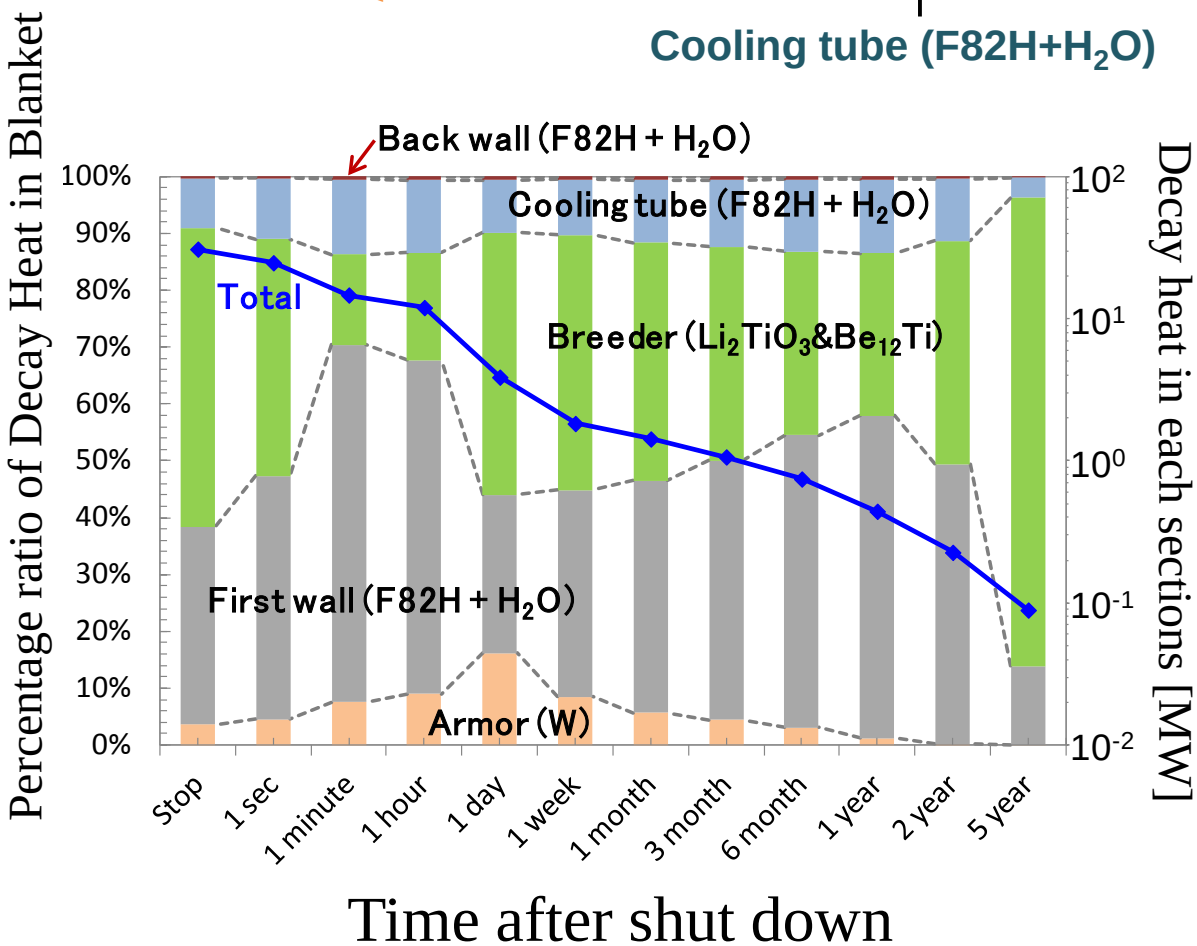

- Decay heat of Tungsten

✓ **Thickness of W is 0.2mm.**

✓ **The contribution of W decay heat to the total amount of the decay heat is not so large, because the volume of W itself is not so large.**

Decay Heat in Divertor

By Y. Someya (JAEA)

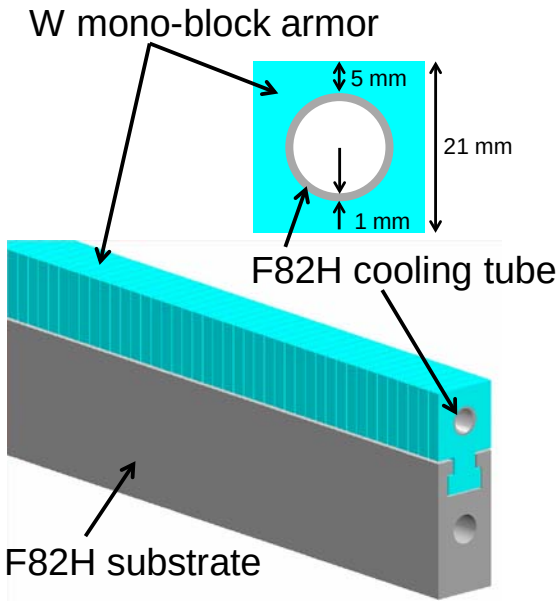

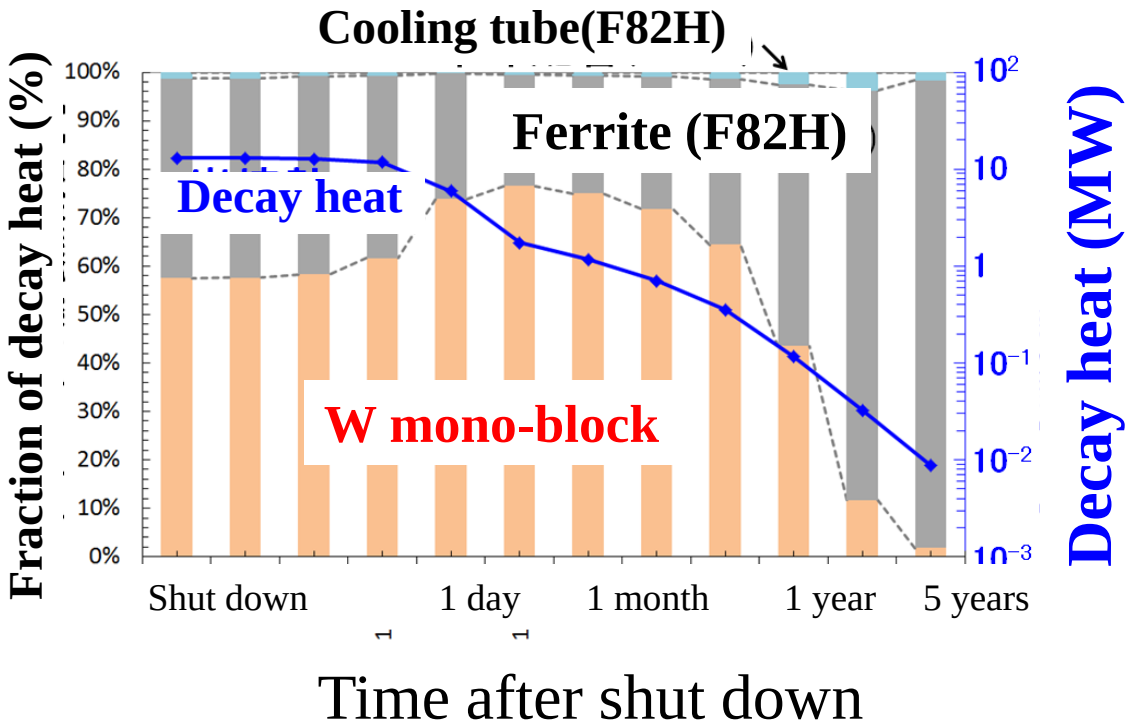

Safety Analysis in Europe

1990 ~

SEAFP (Safety and Environmental Assessments of Fusion Power)

SEAL (Safety and Environmental Assessment of Fusion Power-Long Term)

2000 ~

PPCS (Power Plant Conceptual Study)

Safety and Environmental Assessment of Fusion Power (SEAFP)

Report of the SEAFP Project

J.Raeder (NET,Project Leader)
I. Cook (UKAEA)
F.H. Morgenstern (EFA)
E. Salpietro (NET)
R. Bünde (NET)
E. Ebert (NET)

June 1995

EUROPEAN COMMISSION
Directorate General XII
Fusion Programme
Brussels

SEAFP report

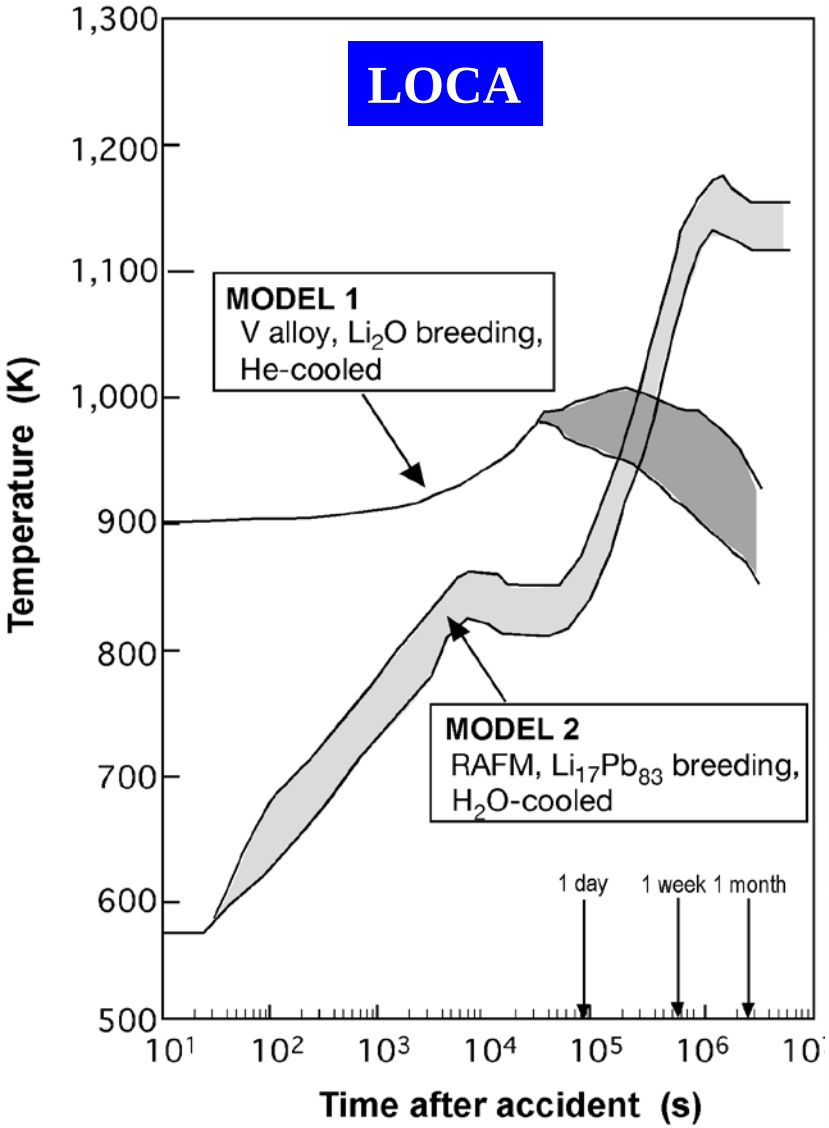

LOSP event

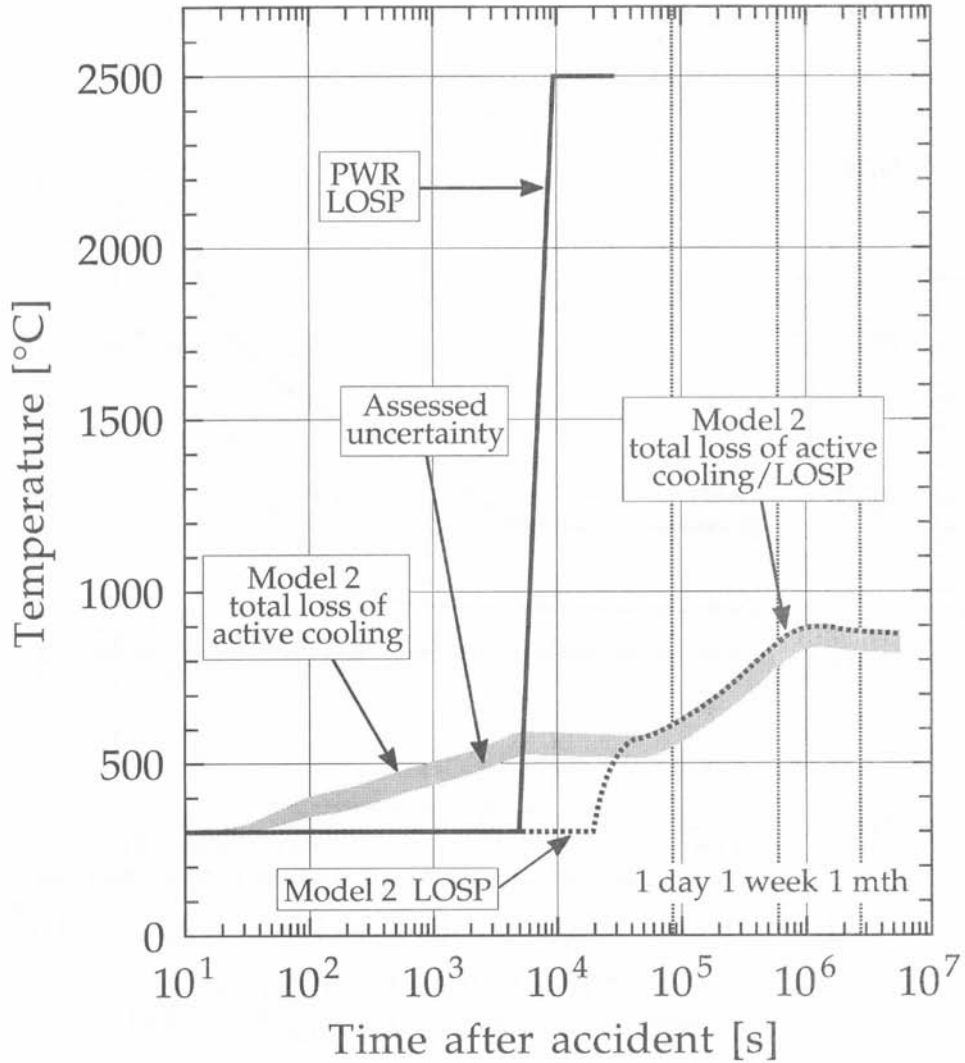

Fig. 5-15:
Temperature transients, PWR core and SEAFP model 2 (reduced activation martensitic steel, water cooling). LOSP = Loss Of Site Power.

Analysis of LOCA in PPCS

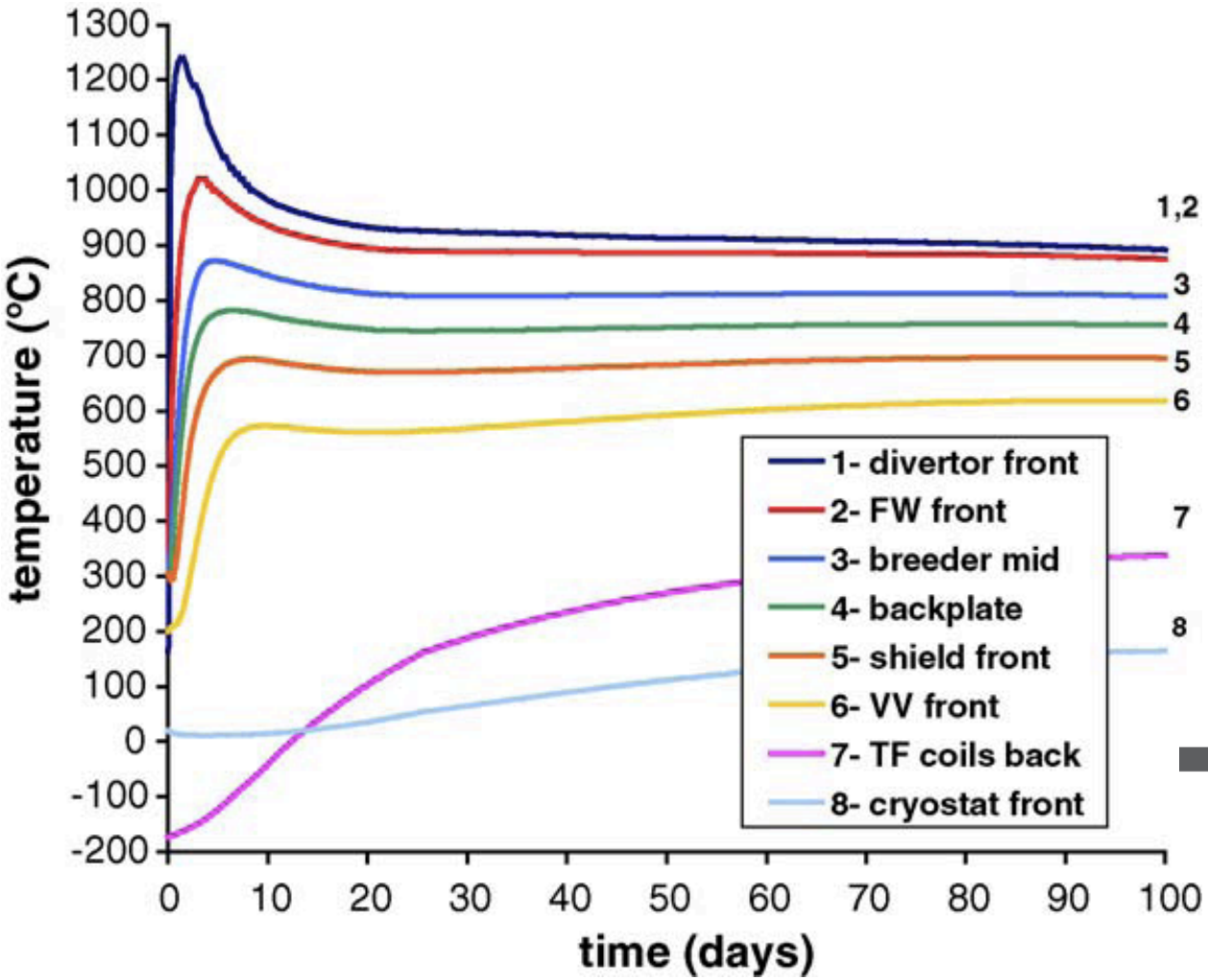

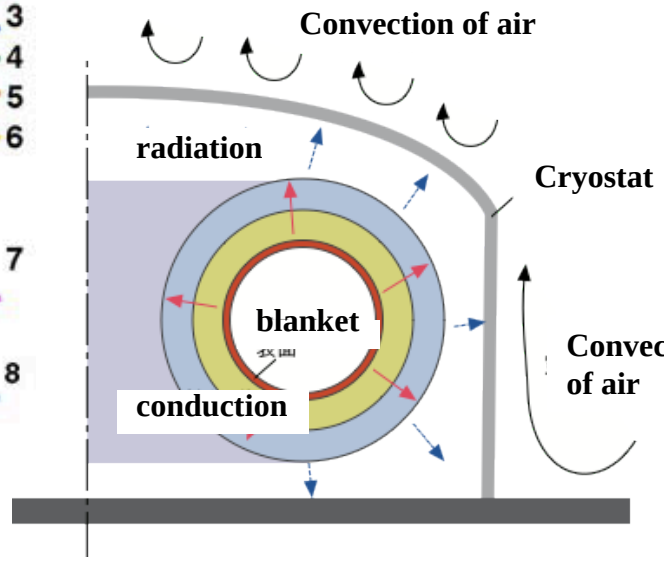

← Neutron wall loading is ~ 2 MW/m^2.

Dependence of the maximum temperature on the neutron wall loading

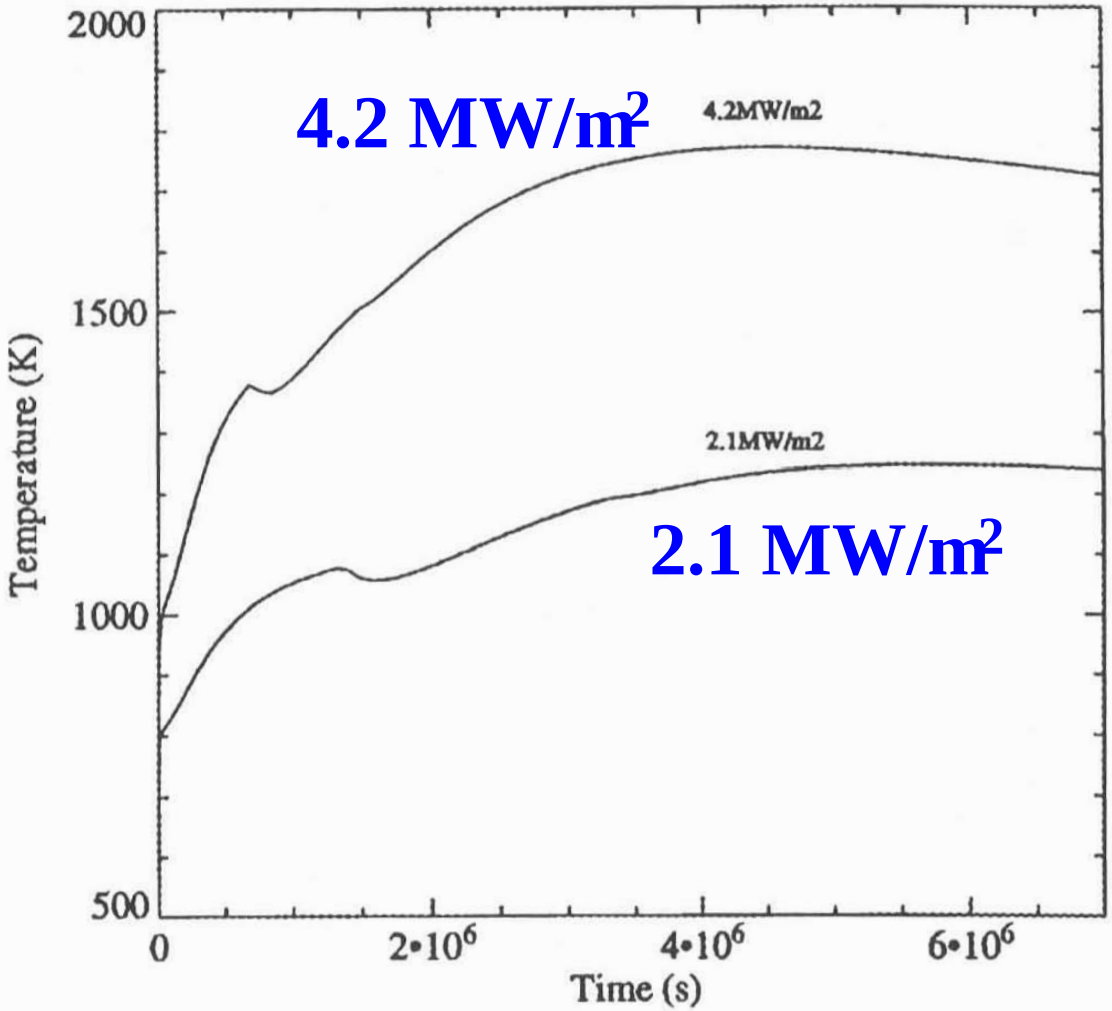

Fig. 5 First wall temperature excursions in postulated extreme accidents in S-2-like power stations at nominal and double wall load.

- The decay heat density just after the shut down is proportional to **neutron flux** (not to neutron fluence).

- The total decay heat is, roughly speaking, proportional to the total fusion power (not to the neutron flux).

Difference between fission and fusion reactors

Fission Reactor

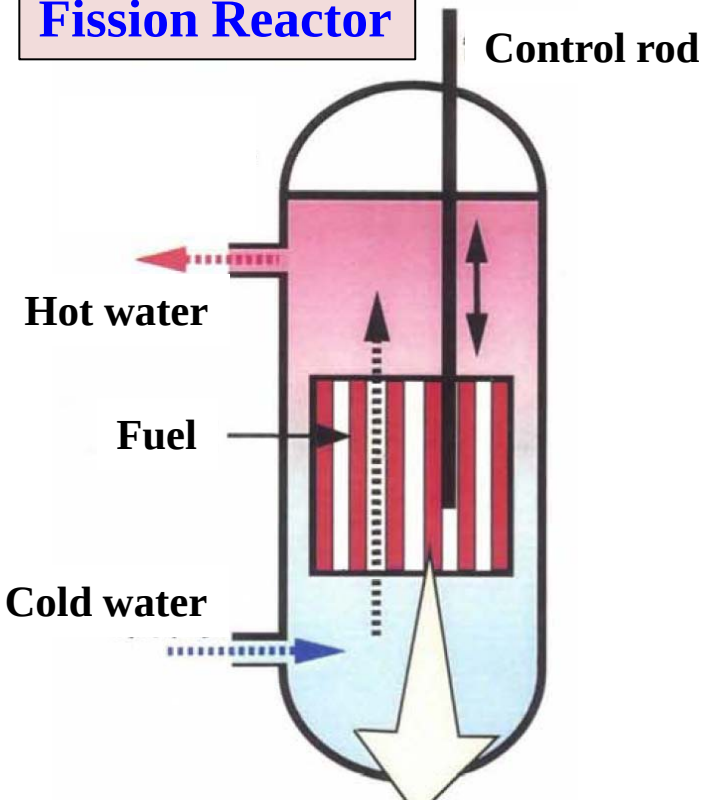

Fusion Reactor

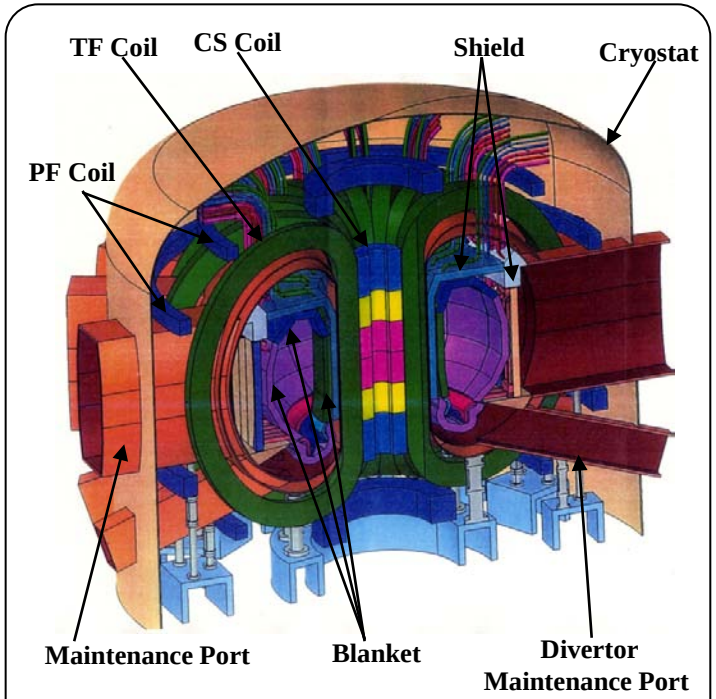

Figure:Bird's-eye of Demo-CREST

- The total amount of decay heat of the fusion reactor is comparable or slightly smaller than that of fission reactor.
- The differences between fission and fusion reactors are
  - @ Volume of heat source
  - @ Heat pass to the heat sink
  - @ Heat capacity of the surrounding components

Safety Analysis Codes and Validation & Verification Experiments

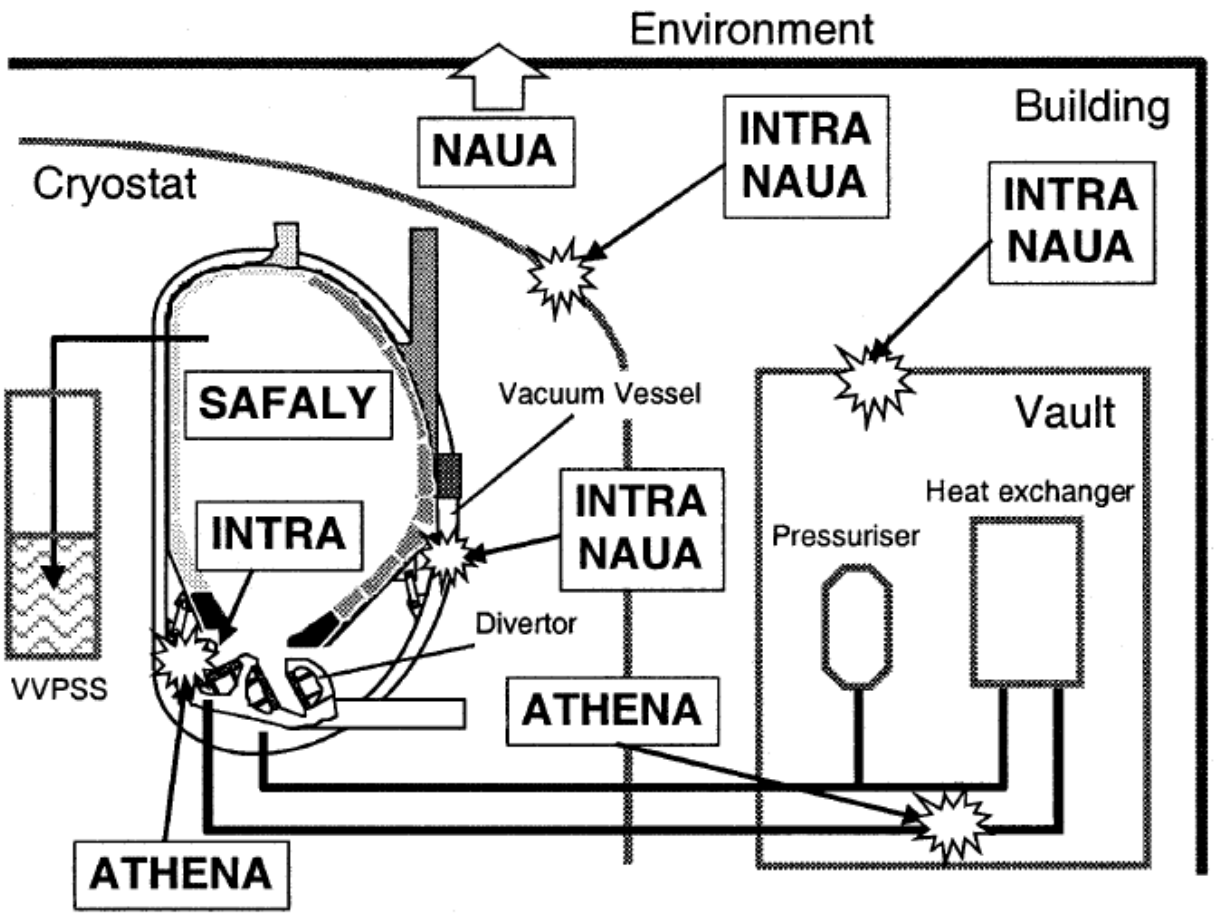

Ingress-of-Coolant Event (ICE)

The water injected from the cooling tubes into the PFC flows through the divertor slits to the bottom of the VV and the accumulated water in the VV moves through a relief pipe to a suppression tank (ST).

At this time a great amount of vapor generates due to the flashing under vacuum and boiling heat transfer from the plasma-facing surfaces, and then, the pressure inside the PFC and VV increases.

Because of the pressurization a couple of rupture disks which are settled at the relief pipe are broken and the water under high temperature and vapor flow into the ST.

The ST initially holds water under low temperature and pressure (about 25°C and 2300 Pa), and therefore, water under high temperature and vapor can be cooled down and condensed inside the ST, and consequently, the pressure in the ITER can be decreased.

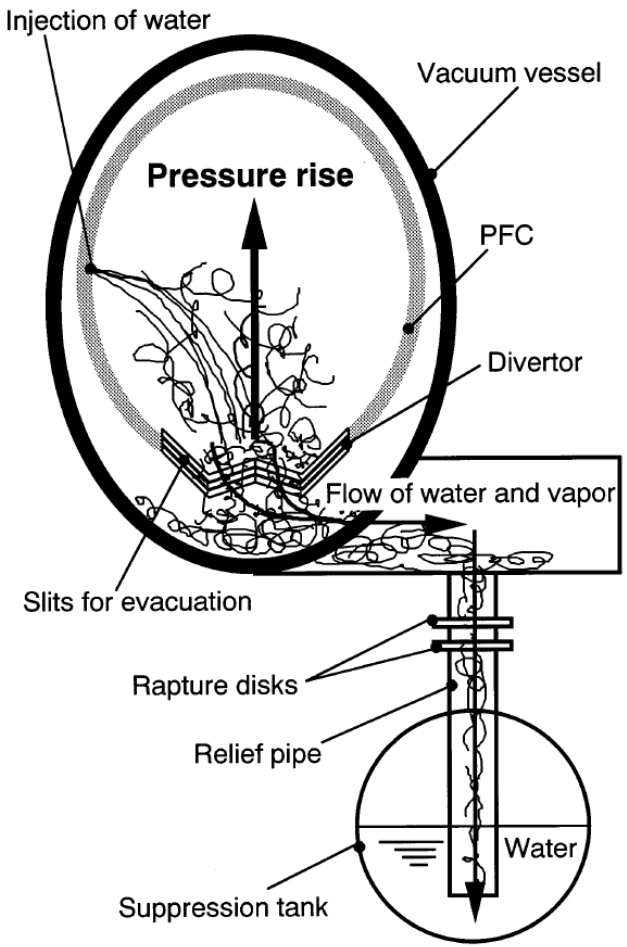

Integrated ICE test facility

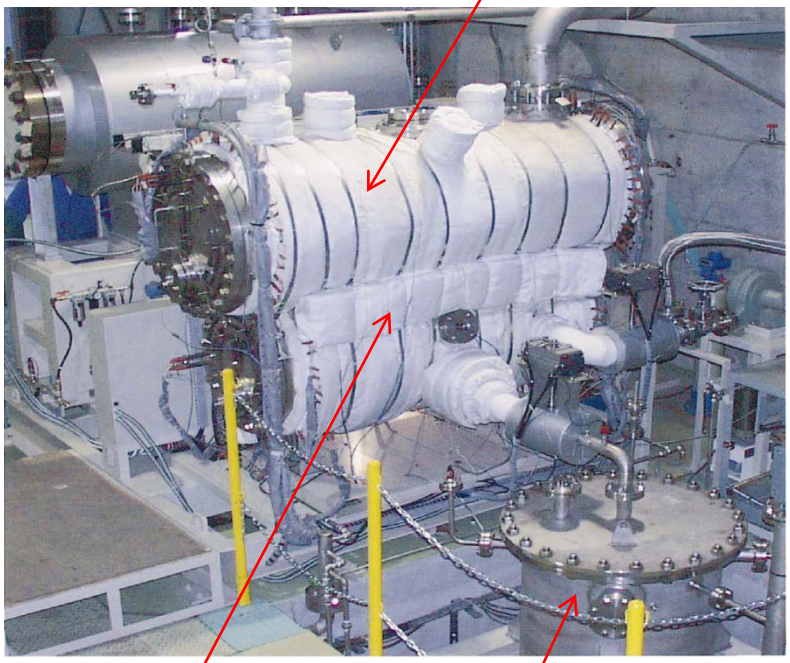

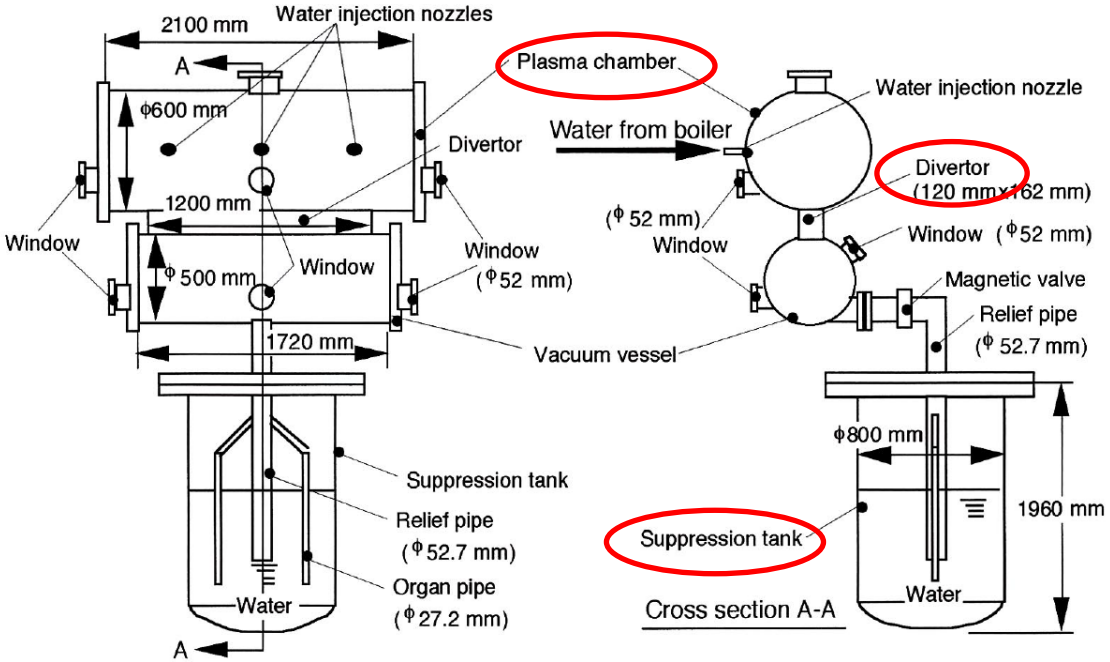

Validation analysis of ICE experiments

- TRAC-PF1（JAPAN）、MELCOR（ITER)、ATHENA（US）、CONSEN/SAS（Italy）、INTRA（Sweden）、PAX（France）

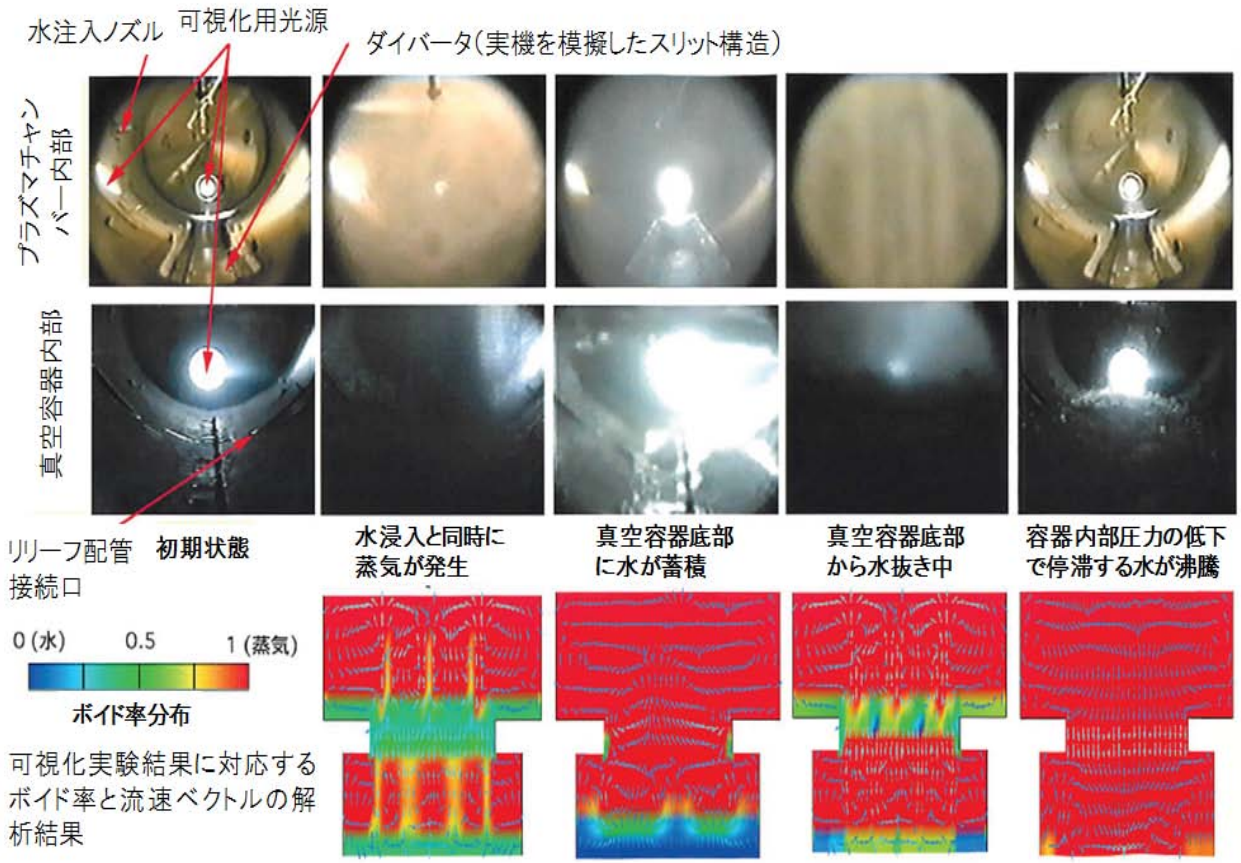

Validation for TRAC-PF1

LOVA Experiment（JAERI）

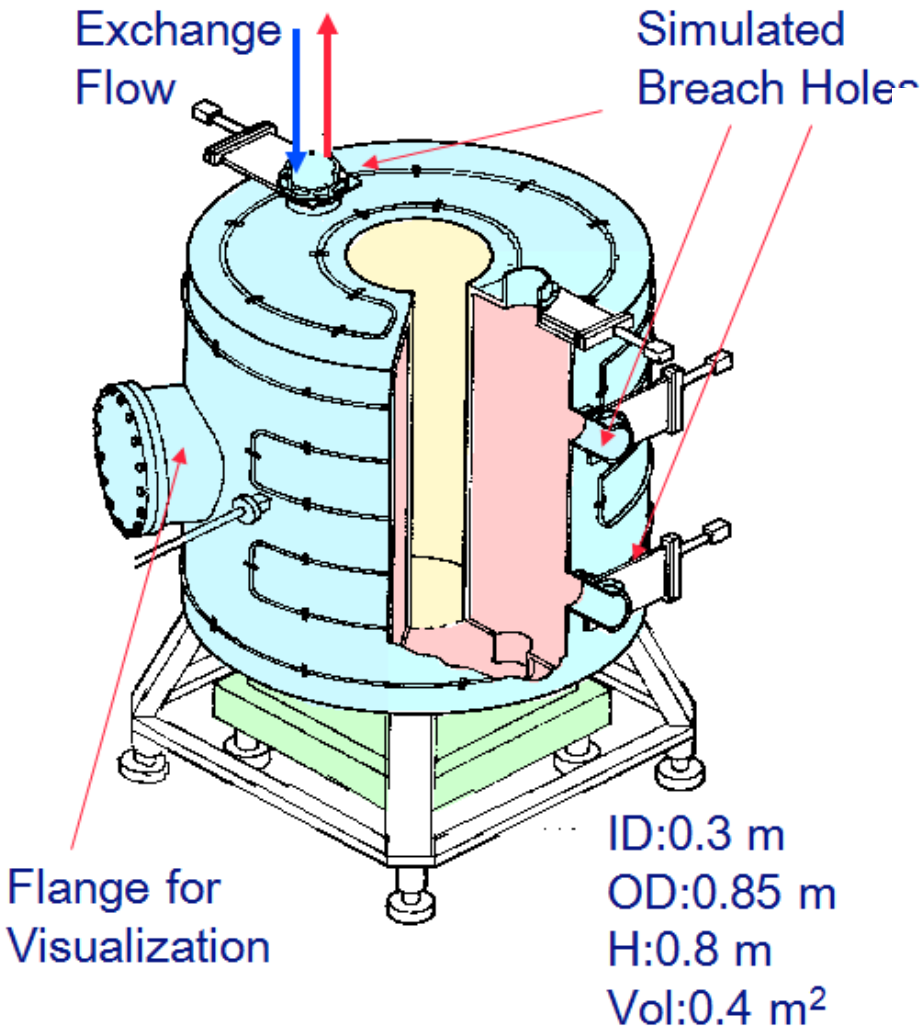

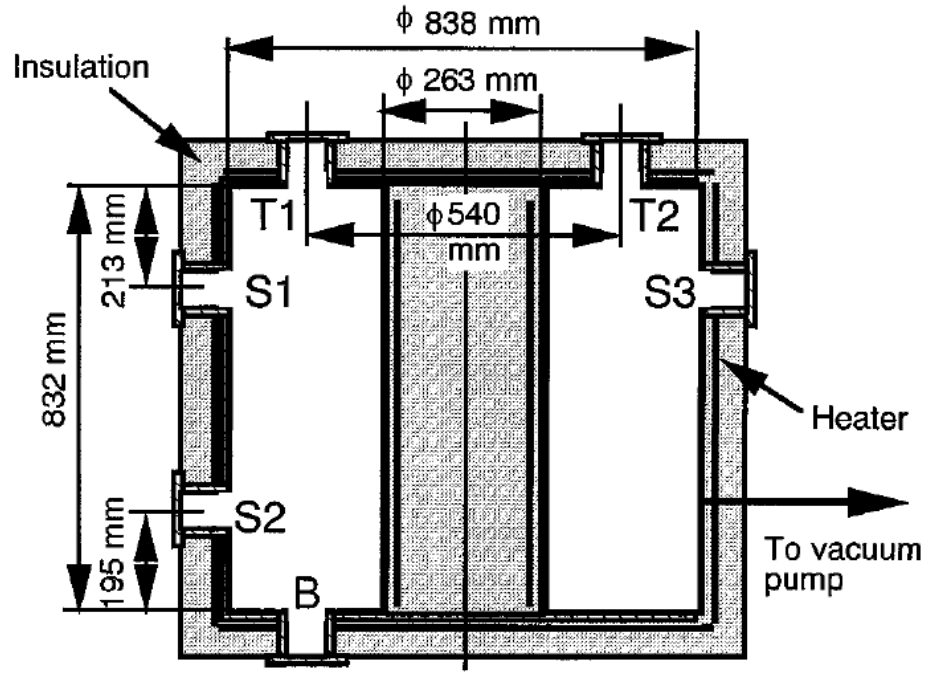

MELCOR Code Applied to Advance Power Extraction (APEX) Reactor Safety Assessment

- APEX studied an advanced Ferritic Steel FLiBe breeder Reactor Concept
- Evaluated a confinement bypass accident
  - Total loss of site power that induces a beyond design basis plasma disruption the resulting in the loss of confinement through a heating or diagnostic duct to an adjoining room
- Source terms included structure activation products by oxidation, tungsten dust from the divertor erosion, FLiBe activation products by evaporation, and structure tritium by diffusion
- Conservative weather conditions and stack release assumed

Loss-of-Vacuum Accident

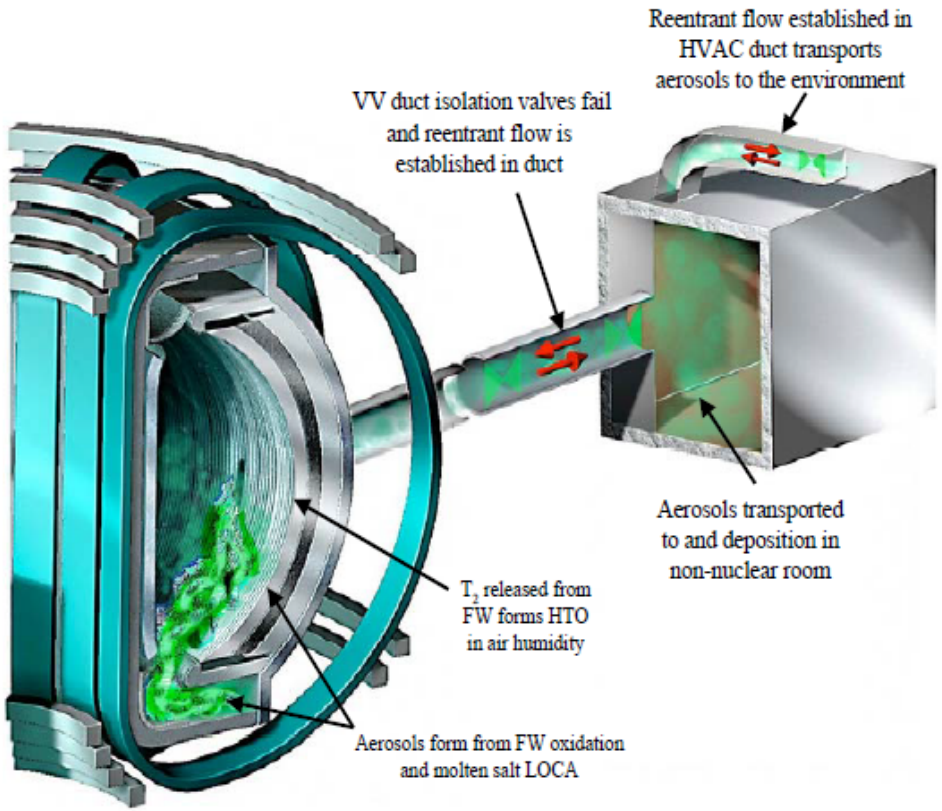

Ref: **Recent Accomplishments and Future Directions in the US Fusion Safety & Environmental Programs**, *D. Petti*, Proc. 8th IAEA Techical Meeting on Fusion Power Plant Safety, 2006

Safety issues on Tritium

Environmental behavior of tritium (air and water)

(a) Tritium in the rain

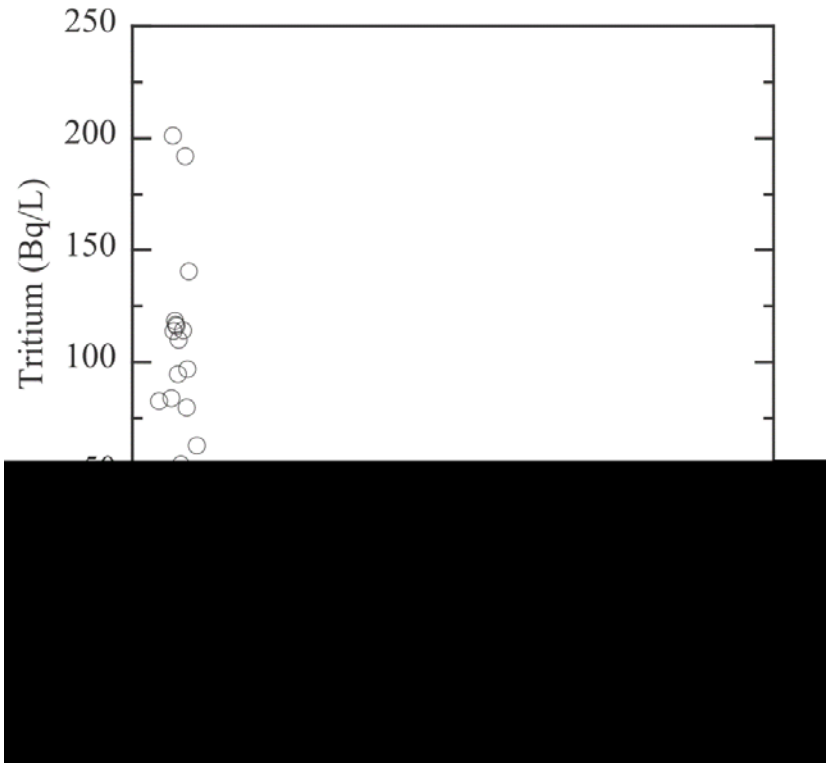

(b) Tritium in the air

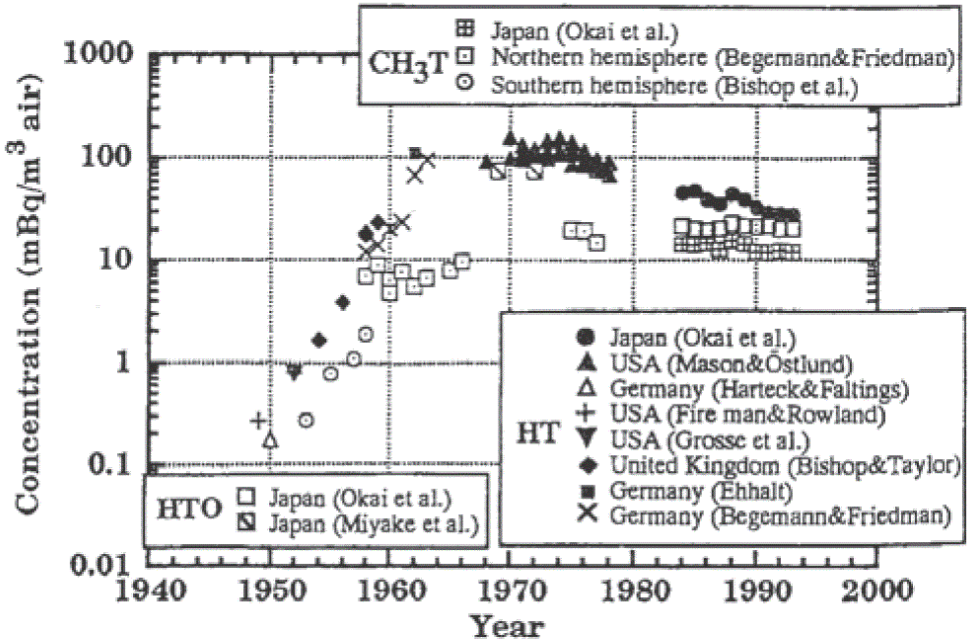

図１　化学形態別に示した大気中トリチウム濃度の変遷[8].

Science of the Total Environment 445–446 (2013) 365–370

Contents lists available at SciVerse ScienceDirect

Science of the Total Environment

journal homepage: www.elsevier.com/locate/scitotenv

Tritium in Japanese precipitation following the March 2011 Fukushima Daiichi Nuclear Plant accident

Takuya Matsumoto [a,*], Teruyuki Maruoka [b], Gen Shimoda [c], Hajime Obata [d], Hiroyuki Kagi [e], Katsuhiko Suzuki [f], Koshi Yamamoto [g], Takehiro Mitsuguchi [h,j], Kyoko Hagino [i], Naotaka Tomioka [i], Chinmaya Sambandam [a], Daniela Brummer [a], Philipp Martin Klaus [a], Pradeep Aggarwal [a]

[a] Isotope Hydrology Section, Division of Physical and Chemical Sciences, International Atomic Energy Agency, Vienna International Centre, 1400 Vienna, Austria
[b] Division of Integrative Environmental Sciences Graduate School of Life and Environmental Sciences, University of Tsukuba, 1-1-1 Tennodai, Tsukuba City, Ibaraki 305-8572, Japan
[c] Geological Survey of Japan, National Institute of Advanced Industrial Science and Technology, 1-1-1 Higashi, Tsukuba City, Ibaraki 305-8561, Japan
[d] Atmosphere and Ocean Research Institute, The University of Tokyo, 5-1-5, Kashiwanoha, Kashiwa-shi, Chiba 277-8564, Japan
[e] Geochemical Research Center, The University of Tokyo, 7-3-1 Hongo, Bunkyo-ku, Tokyo 113-0033, Japan
[f] Japan Agency for Marin-Earth Science and Technology, 2-15, Natsushima, Yokosuka, Kanagawa 237-0061, Japan
[g] Graduate School of Environmental Studies, Nagoya University, Furo-cho, Chikusa-ku, Nagoya 464-8601, Japan
[h] 215 Ooma Akadoji-cho Konan, 483-8226, Japan
[i] Institute for Study of the Earth's Interior, Okayama University at Misasa, 827 Yamada, Misasa, Tottori 682-0193, Japan
[j] Usa Marine Biological Institute, Kochi University, 194 Inoshiri, Usa, Tosa, Kochi 781-1164, Japan

HIGHLIGHTS

- ► We measured the ^{3}H contents of Japanese rain collected after the Fukushima accident.
- ► ^{3}H level became 30 times higher than pre-accident level in the first rain at Tsukuba.
- ► Some locality within 220 km from the source showed elevated ^{3}H levels.
- ► These high ^{3}H signals disappear in a few weeks.
- ► Atmospheric ^{3}H level at the source during the earliest stage was estimated to be 1500 Bq/m^{3}.

Tritium concentration in Fukushima Daiichi Nuclear Plant Accident

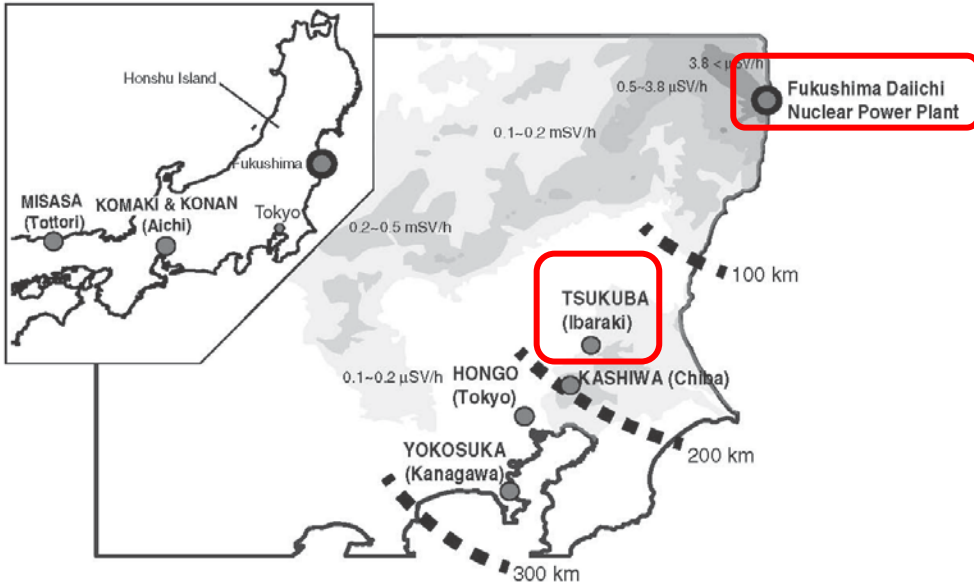

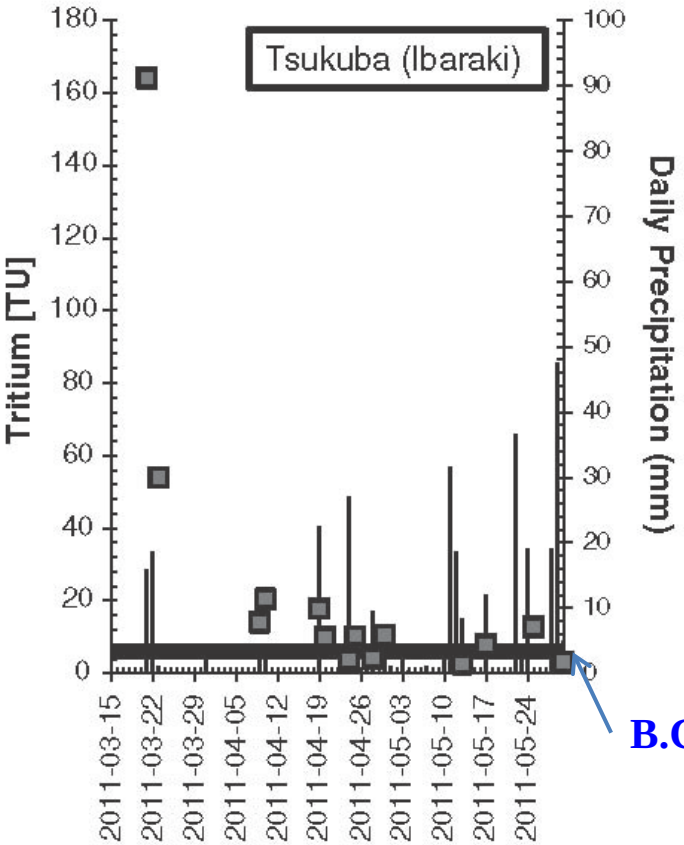

B.G. level

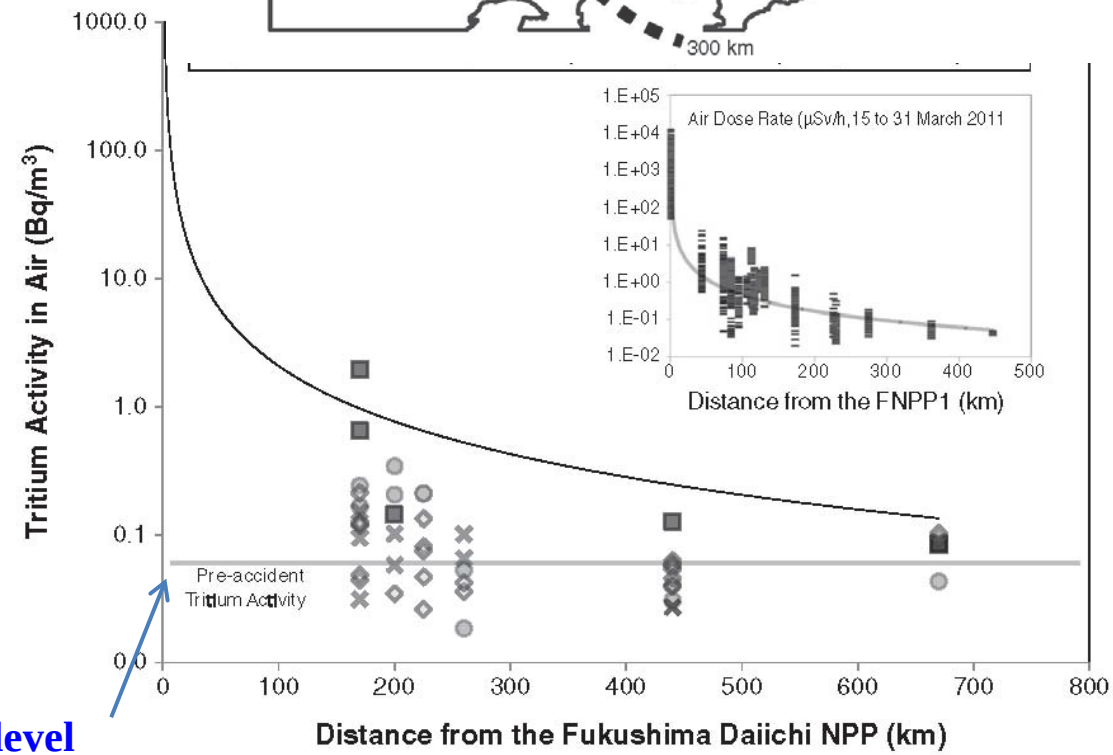

=> 10^{15} Bq in total (6x10^{14} Bq/year in LWR)

Safety analysis in ITER
(case study for inviting ITER to Japan)

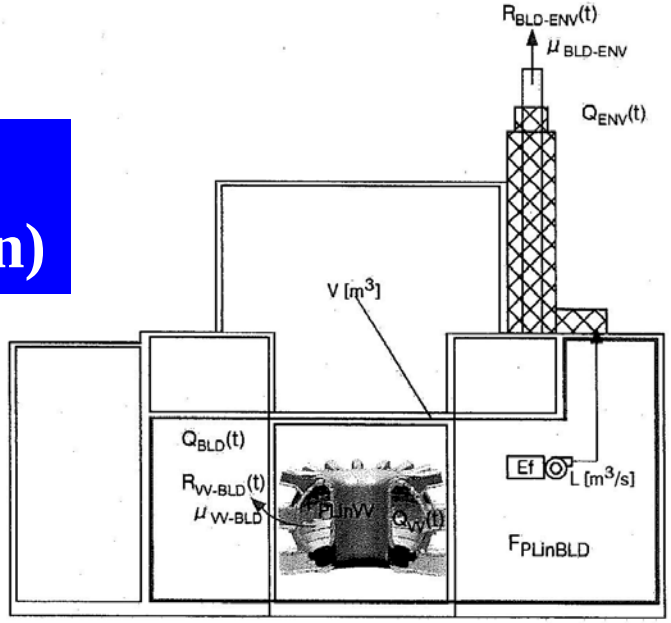

@ Total inventory of tritium : 1.2 kg
@ All of tritium is assumed to be released inside the building.
@ The efficiency of tritium capture by the ventilation system of the building is assumed to be 99 %.
@ This results in the 1 % tritium release (12g HTO) through a stack (100 m in height).
@ Several climate conditions have been considered, and most severe condition is employed.
=> This yields 0.9 mSv at 400 m from the site, resulting in no evacuation.

ARIES-AT
in-vessel LOCA

	inventory	release
tritium	**205 g**	**7.6 g**
W dust	10 kg	207 g

➡ Site boundary < 10 mSv

A sense of safety/security

From the viewpoint of a sense of safety/security, a hazard potential of the plant should be taken into account.

	Fusion plant Tritium (1 kg)	**LWR I-131**
Kind of Radioactivity	18.6 keV : β ray	610 keV: β ray
Amount of Radioactive isotope (A)	0.38×10^{18} Bq	5.4×10^{18} Bq
Maximum permissible density in the air (B)	5000 (Bq/m^3)	10 (Bq/m^3)
Hazard potential(=A/B)	7.8×10^{13} m^3	5.4×10^{17} m^3
Comparison of hazard potential	**1/6800**	**1**
INES	**1/680**	**1**

=> **～1/10**

=> **～1/500**

I-131 equivalence
For public（B）
～1/50

International Nuclear and Radiological Event Scale : IAEA and OECD/NEA

1 GW fusion reactor ~ 1 MW fission research reactor

INES（International Nuclear and Radiological Event Scale）

Level 7 :	**> several x 10^{16} Bq**	**Chernobyl, Fukushima**
Level 6 :	**several x 10^{15} ~ 10^{16} Bq**	
Level 5 :	**< several x 10^{15} Bq**	**Three mile island**
Level 4 :		**JCO critical accident**
Level 3 :		**no evacuation**

Tritium 1 kg, = > 3.6 x 10^{17} Bq

131-I equivalence

1/500	**~ 7x10^{14} Bq**	**=> Level 4-5**
1/50	**~ 7x10^{15} Bq**	**=> Level 5-6**

Summary

@ Task force committee was organized at JSPF, and report on "Characteristics of Fusion Energy and Safety/Security Issues of a Fusion Reactor" has been compiled. The report is in print as NIFS report, and it is available in the next week.

@ From the viewpoint of public acceptance, we have to pay much attention to the safety issues in a fusion reactor. By considering safety issues as a highest priority, in some sense, reactor design optimization might be required.

@ The research on safety problems of the fusion reactor has been launched in Japan, and recent activity will be presented by Dr. M. Nakamura in this workshop.