Overview of ARIES ACT-1 Study

Farrokh Najmabadi
Professor of Electrical & Computer Engineering
Director, Center for Energy Research
UC San Diego

and **the ARIES Team**

Japan-US Workshop on Fusion Power Plants and Related Advanced Technologies with participations from China & Korea
February 26-28, 2013

ARIES Program Participants

Systems code: UC San Diego, PPPL

Plasma Physics: PPPL , GA, LLNL

Fusion Core Design & Analysis: UC San Diego, FNT Consulting

Nuclear Analysis: UW-Madison

Plasma Facing Components (Design & Analysis): UC San Diego, UW-Madison

Plasma Facing Components (experiments): Georgia Tech

Design Integration: UC San Diego, Boeing

Safety: INEL

Contact to Material Community: ORNL

Goals of ARIES ACT Study

- Over a decade since last tokamak study : ARIES-1 (1990) through ARIES-AT(2000).
  - Substantial progress in understanding in many areas.
  - New issues have emerged: e.g., edge plasma physics, PMI, PFCs, and off-normal events.
    - What would be the maximum fluxes that can be handled by in-vessel components in a power plant?
    - What level of off-normal events are acceptable in a commercial power plant?
- Evolving needs in the ITER and FNSF/Demo era:
  - Risk/benefit analysis among extrapolation and attractiveness.
  - Detailed component designs is necessary to understand R&D requirements.

Frame the "parameter space for attractive power plants" by considering the "four corners" of parameter space

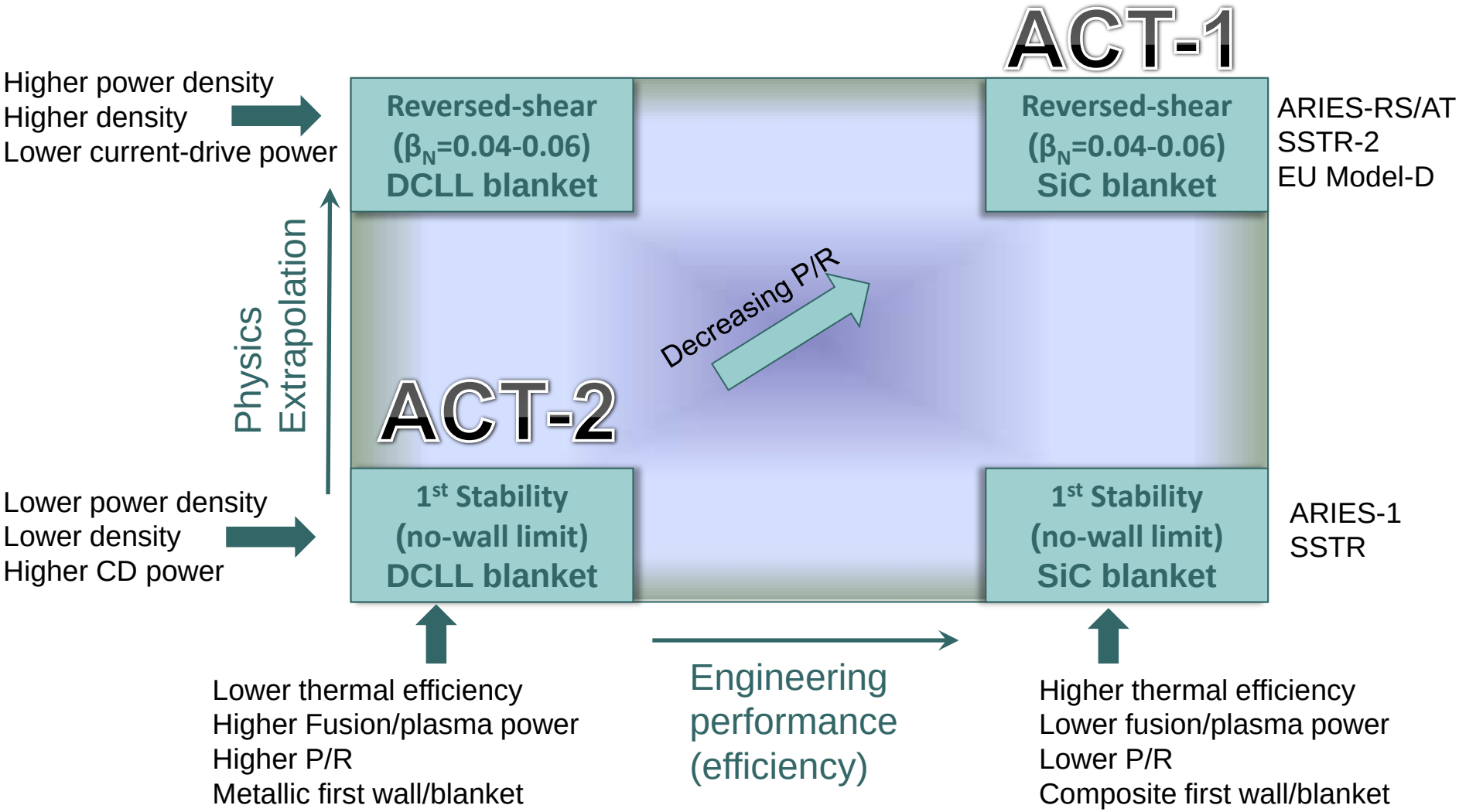

Status of the ARIES ACT Study

- Project Goals:
  - Detailed design of advanced physics, SiC blanket ACT-1 (ARIES-AT update).
  - Detailed design of ACT-2 (conservative physics, DCLL blanket).
  - System-level definitions for ACT-3 & ACT-4.
- ACT-1 research is completed.
  - First design iteration was completed for a 5.5 m Device.
  - Updated design point at R = 6.25 m (detailed design on-going)
  - Final report to be published as a special issue of Fusion Science & Technology
- ACT-2 Research will be completed by December 2013.

ARIES-ACT1 (ARIES-AT update)

- Advance tokamak mode
- Blanket: SiC structure & LiPb Coolant/breeder (to achieve a high efficiency)

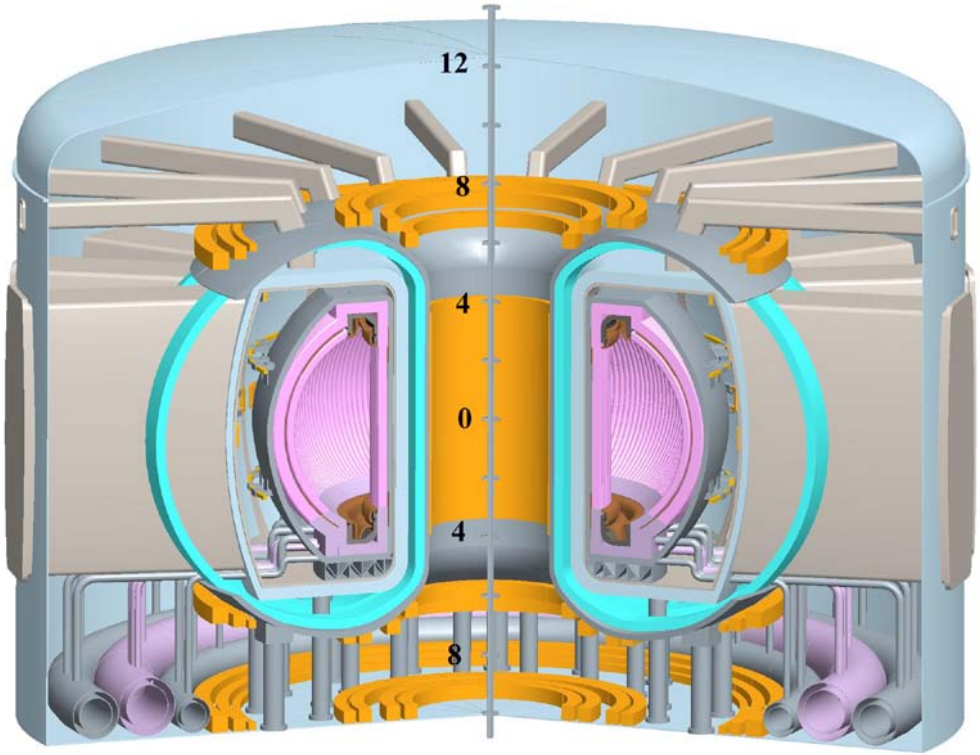

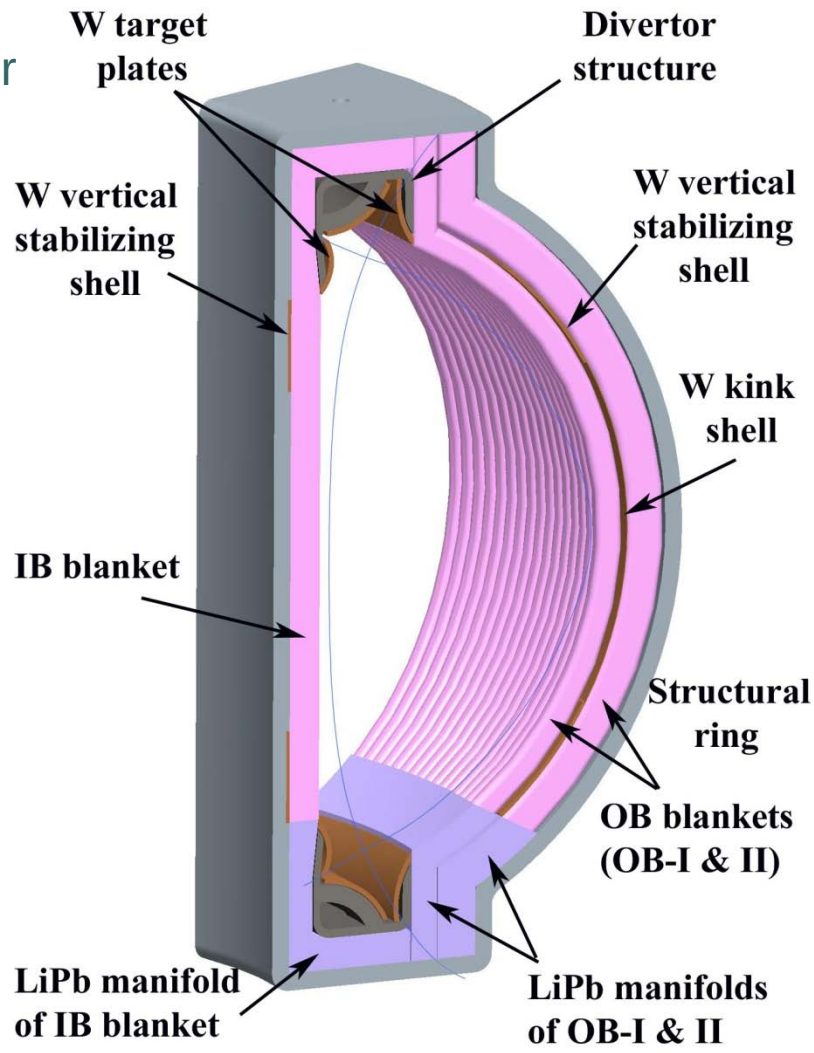

ARIES Systems Code – a new approach to finding operating points

- Systems codes find a single operating point through a minimization of a figure of merit with certain constraints
  - Very difficult to see sensitivity to assumptions.
- Our new approach to systems analysis is based on surveying the design space and finding a large number of viable operating points.
- A GUI is developed to visualize the data. It can impose additional constraints to explore sensitivities

Example: Data base of operating points with $f_{bs} \leq 0.90$, $0.85 \leq f_{GW} \leq 1.0$, $H_{98} \leq 1.75$

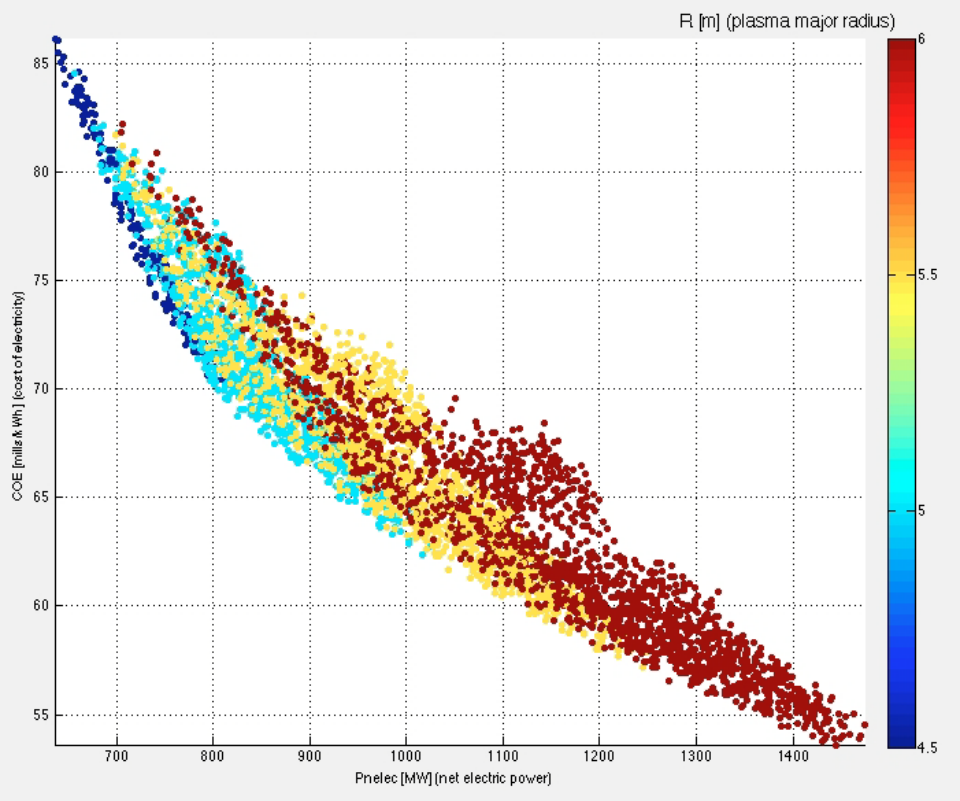

Impact of the Divertor Heat load

- Divertor design can handle > 10 MW/m^2 peak load.
- UEDGE simulations (LLNL) showed detached divertor solution to reach high radiated powers in the divertor slot and a low peak heat flux on the divertor (~5MW/m^2 peak).
  - Leads to ARIES-AT-size device at R=5.5m.
  - Control & sustaining a detached divertor?
- Using Fundamenski SOL estimates and 90% radiation in SOL+divertor leads to a 6.25-m device with only 4 mills cost penalty (current reference point).
  - Device size is set by the divertor heat flux

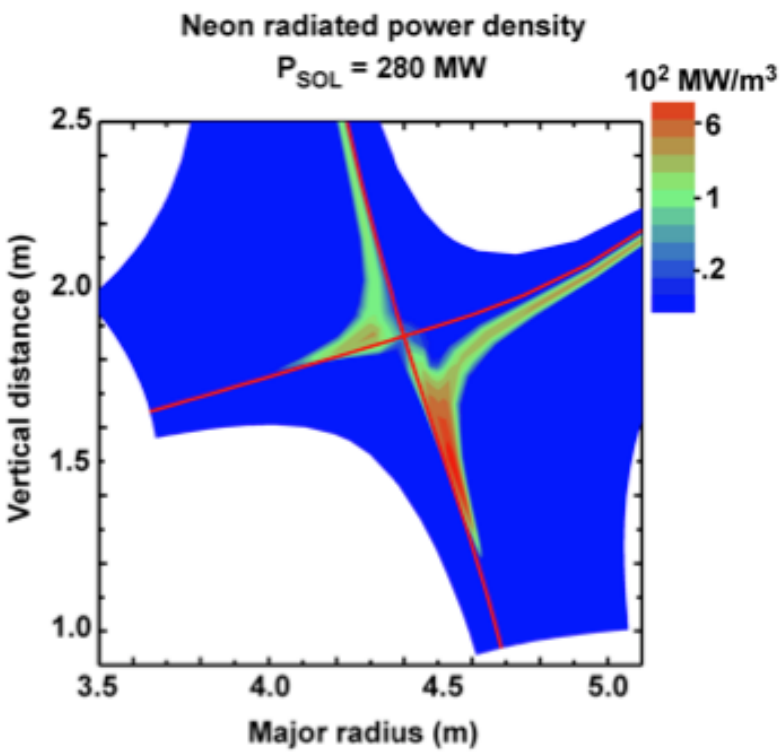

The new systems approach underlines robustness of the design point to physics achievements

Major radius (m)	**6.25**
Aspect ratio	4
Toroidal field on axis (T)	6
Peak field on the coil (T)	11.8
Normalized beta*	**5.75%**
Plasma current (MA)	10.9
H98	1.65
Fusion power (MW)	1813
Auxiliary power	160
Average n wall load (MW/m^2)	2.5
Peak divertor heat flux (MW/m^2)	13.5
Cost of Electricity (mills/kWh)	67

* Includes fast α contribution of ~ 1%

The new systems approach underlines robustness of the design point to physics achievements

Major radius (m)	**6.25**	**6.25**
Aspect ratio	4	4
Toroidal field on axis (T)	6	7
Peak field on the coil (T)	**11.8**	**12.9**
Normalized beta*	**5.75%**	**4.75%**
Plasma current (MA)	10.9	10.9
H98	1.65	1.58
Fusion power (MW)	1813	1817
Auxiliary power	160	169
Average n wall load (MW/m^2)	2.5	2.5
Peak divertor heat flux (MW/m^2)	13.5	13.5
Cost of Electricity (mills/kWh)	67	69

* Includes fast α contribution of ~ 1%

Detailed Physics analysis has been performed using the latest tools

New physics modeling

- Energy transport assessment: what is required and model predictions
- Pedestal treatment
- Time-dependent free boundary simulations of formation and operating point
- Edge plasma simulation (consistent divertor/edge, detachment, etc)
- Divertor/FW heat loading from experimental tokamaks for transient and off-normal*
- Disruption simulations*
- Fast particle MHD

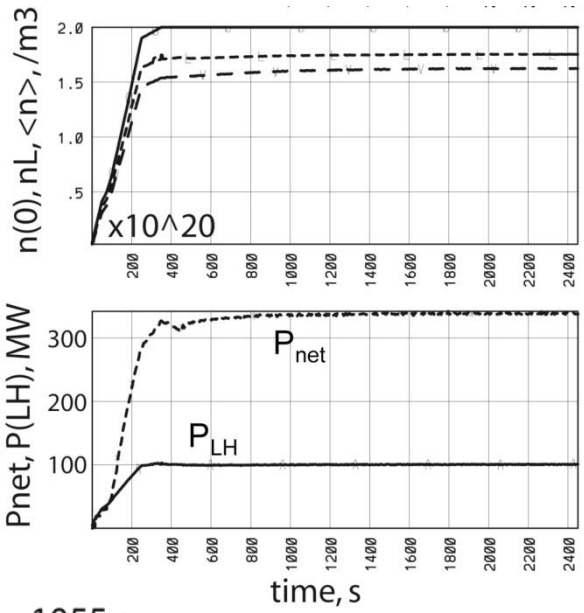

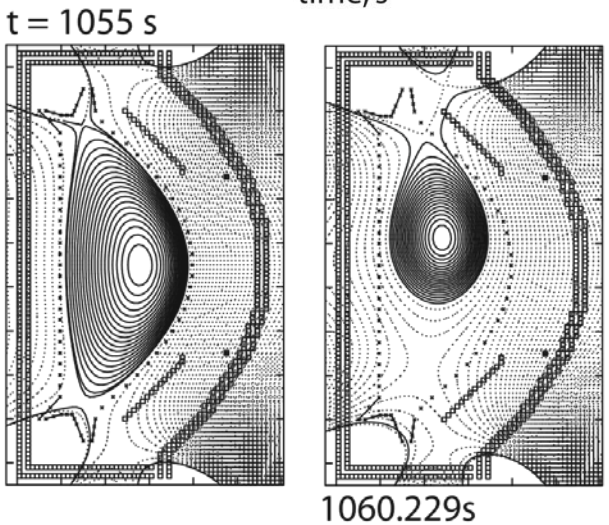

* Discussed in the paper by M. Tillack, C. Kessel

Overview of engineering design: *1. High-hest flux components**

- Design of first wall and divertor options
  - High-performance He-cooled W-alloy divertor, external transition to steel
  - Robust FW concept (embedded W pins)
- Analysis of first wall and divertor options
  - Birth-to-death modeling
  - Yield, creep, fracture mechanics
  - Failure modes
- Helium heat transfer experiments
- ELM and disruption loading responses
  - Thermal, mechanical, EM & ferromagnetic

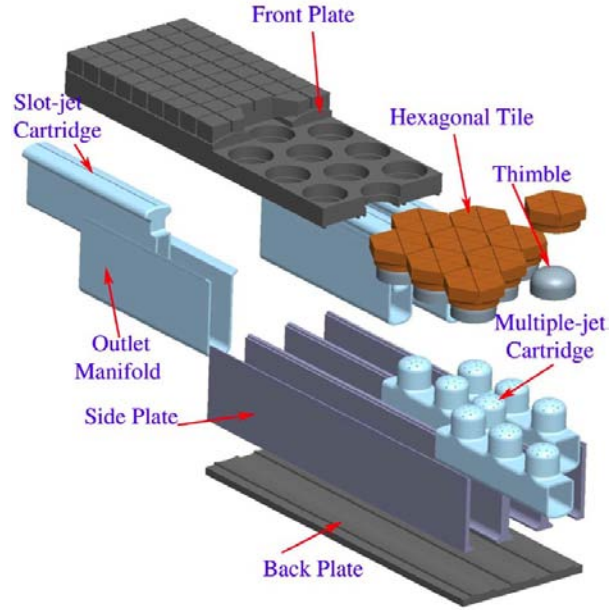

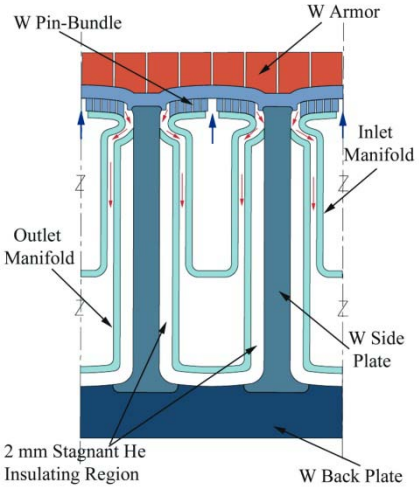

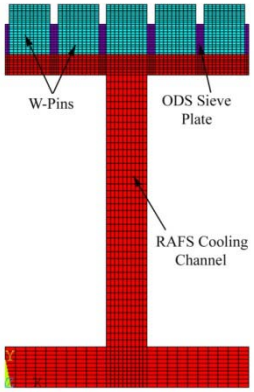

* Discussed in paper by M. Tillack and J. Blanchard,

Overview of engineering design*: *2. Fusion Core*

- Features similar to ARIES-AT
  - PbLi self-cooled SiC/SiC breeding blanket with simple double-pipe construction
  - Brayton cycle with η~58%
- Many new features and improvements
  - He-cooled ferritic steel structural ring/shield
  - Detailed flow paths and manifolding for PbLi to reduce 3D MHD effects*
  - Elimination of water from the vacuum vessel, separation of vessel and shield
  - Identification of new material for the vacuum vessel

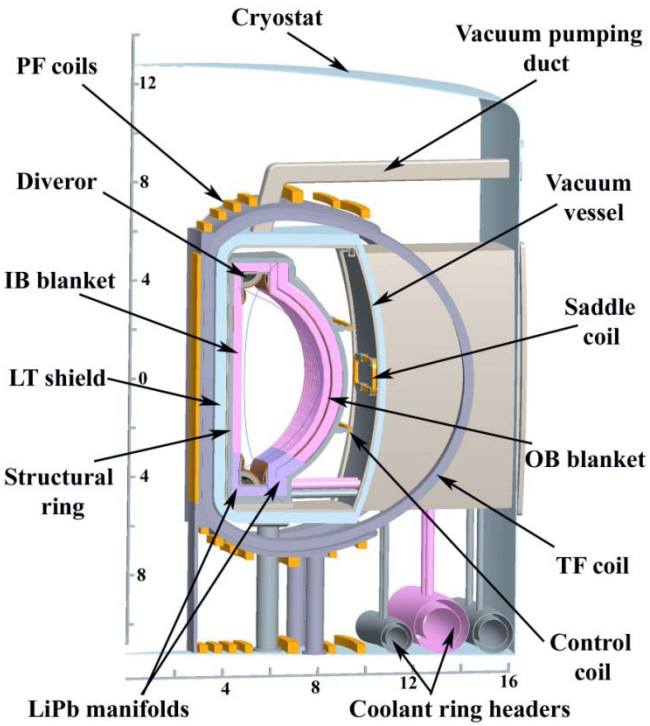

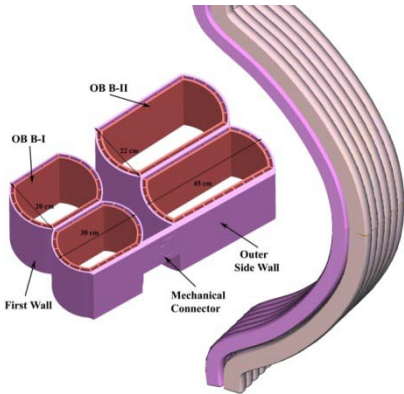

* Discussed in the paper by M. Tillack, this session

Detailed safety analysis has highlighted impact of tritium absorption and transport

- Detailed safety modeling of ARIES-AT (Petti et al) and ARIES-CS (Merrill et al, FS&T, 54, 2008) have shown a paradigm shift in safety issues:
  - Use of low-activation material and care design has limited temperature excursions and mobilization of radioactivity during accidents. Rather off-site dose is dominated by tritium.
  - For ARIES-CS worst-case accident, tritium release dose is 8.5 mSv (no-evacuation limit is 10 mSV)
- Major implications for material and component R&D:
  - Need to minimize tritium inventory (control of breeding, absorption and inventory in different material)
  - Design implications: material choices, in-vessel components, vacuum vessel, etc.

Revisiting ARIES-AT vacuum vessel

- AREIS-AT had a thick vacuum vessel (40 cm thick) with WC and water to help in shielding. (adoption of ITER vacuum vessel).
  - Expensive and massive vacuum vessel.
  - ITER Components are “hung” from the vacuum vessel. ARIES sectors are self supporting (different loads).
- ARIES-AT vacuum vessel operated at 50°C
  - material?
  - Tritium absorption?
  - Tritium transfer to water?
- Vacuum vessel temperature exceeded 100°C during an accident after a few hours (steam!)

New Vacuum Vessel Design

- Contains no water
  - Can run at high temperature: 300-500°C. (350 ^{o}C operating temperature to minimize tritium inventory)
- Cooled by He flowing between ribs.
  - Tritium diffused through the inner wall is recovered from He coolant (Tritium diffusion to the cryostat and/or building should be much smaller.
- Made of low-activation 3Cr-3WV baintic steel (no need for post-weld heat treatment).

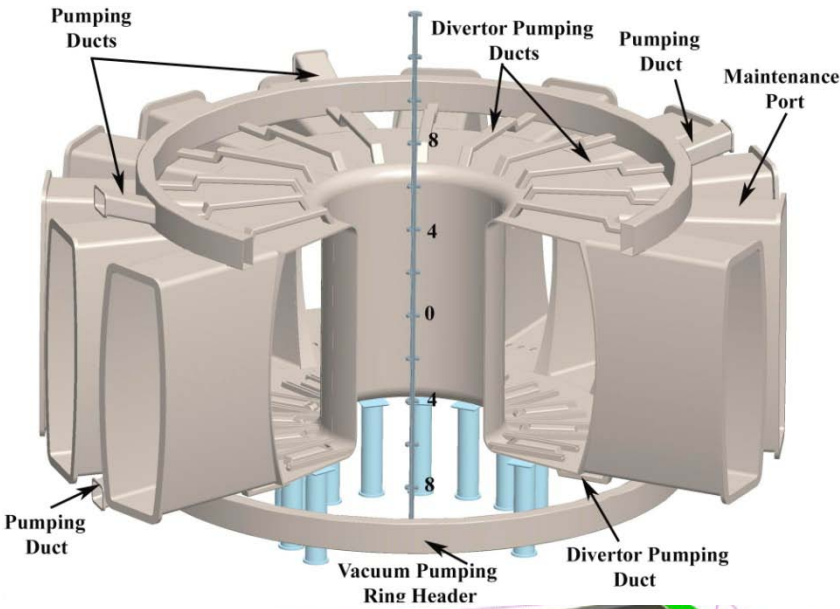

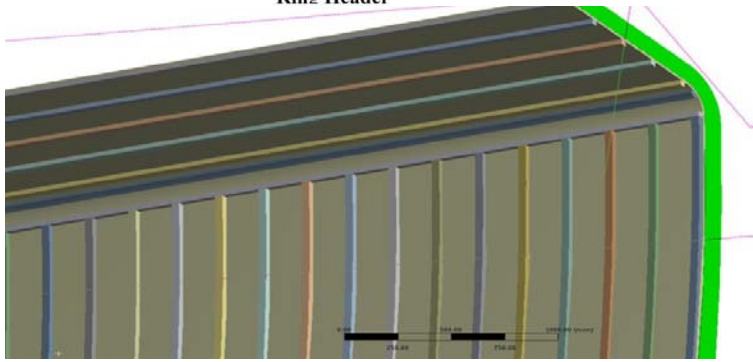

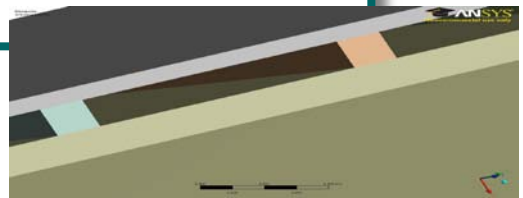

In summary …

- ARIES-ACT study is re-examining the tokamak power plant space to understand risk and trade-offs of higher physics and engineering performance with special emphais on PMI/PFC and off-normal events.
  - ARIES-ACT1 (updated ARIES-AT) is near completion.
  - Detailed physics analysis with modern computational tools are used. Many new physics issues are included.
  - The new system approach indicate a robust design window for this class of power plants.
  - Many engineering imporvements: He-cooled ferritic steel structural ring/shield, Detailed flow paths and manifolding to reduce 3D MHD effects, Identification of new material for the vacuum vessel …
  - In-elastic analysis of component including Birth-to-death modeling and fracture mechanics indicate a higher performance PFCs are possible. Many issues/properties for material development & optimization are identified.

Thank you!