Design Improvements and Analysis to Push the Heat Flux Limits of Divertors

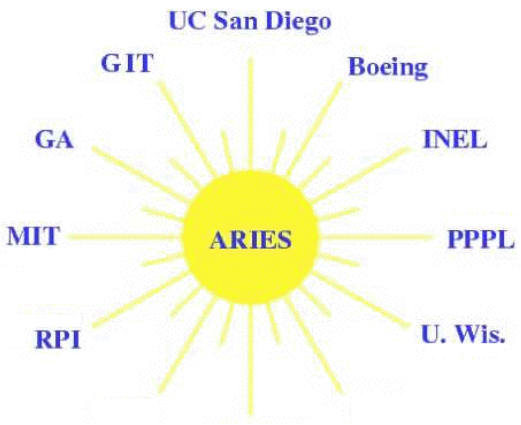

M. S. Tillack, X. R. Wang,
J A. Burke and the ARIES Team

UC SanDiego

Japan-US Workshop on Fusion Power Plants
and Related Advanced Technologies
22-24 February 2011

Summary of progress since February 2010

- **Last year we showed <u>steady-state thermal-hydra</u>ulic and <u>elastic structural analysis</u> for four divertor concepts**
  - Plate, T-tube, Finger, Plate + finger
- **Progress has been made for each concept:**
  - Pin fins added to the plate design, experimental verification
  - Optimized T-tube slot and manifold
  - Modified finger configuration, optimized jet layout
  - Combination finger/plate concept design and fabrication
- **More sophisticated analysis techniques have been used:**
  - Elastic-plastic analysis to push beyond $3S_m$
  - Transient analysis (“birth to death”)

The plate divertor attempts moderately high performance with few parts and simple construction

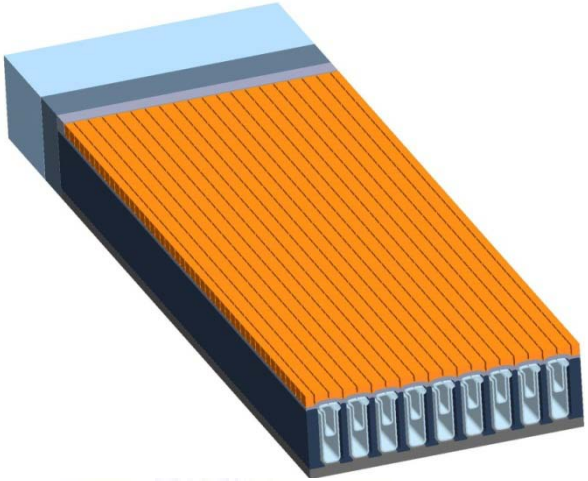

- ~768 units total (16 sectors x 2 up/down x 2 slots x 2 plates x 6 units)
- Inner (floating) steel cartridge
- Slot jet cooling
- Simple connection to a single external joint

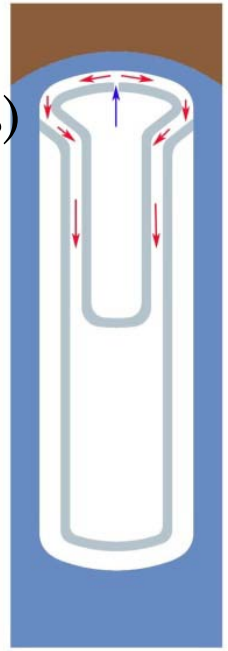

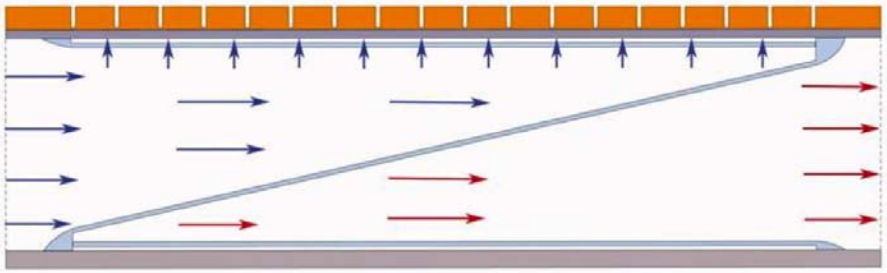

Coolant flow paths

Fabrication of the plate divertor

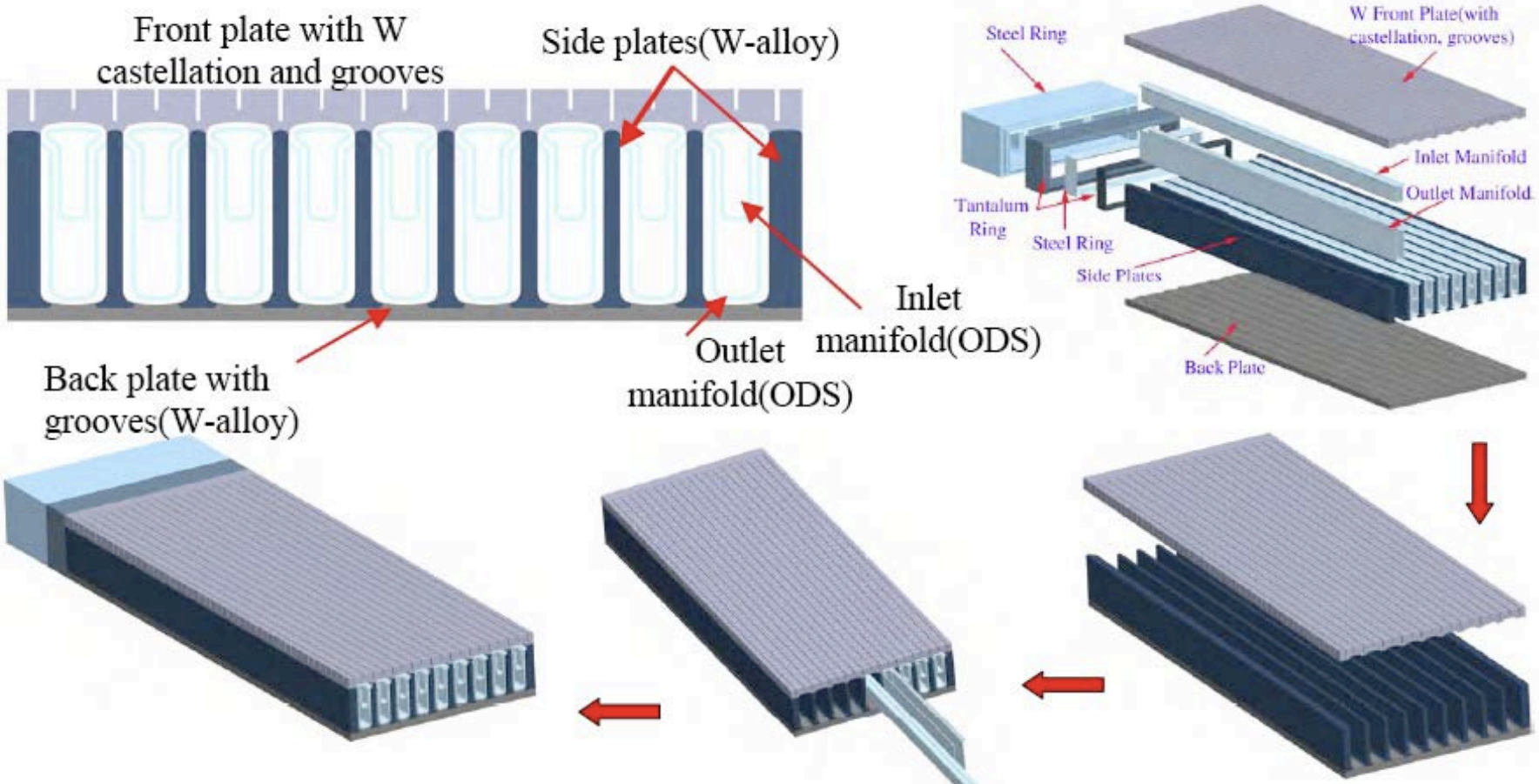

Assembling and joining the transition zones at both ends of the plate unit

Inserting the inlet manifold and aligning it to the front plate, then inserting outlet manifold

Brazing the front plate, side plates and back plate together to one unit

Thermal hydraulic experiments demonstrate very high heat transfer for slot jet cooling with pin fins

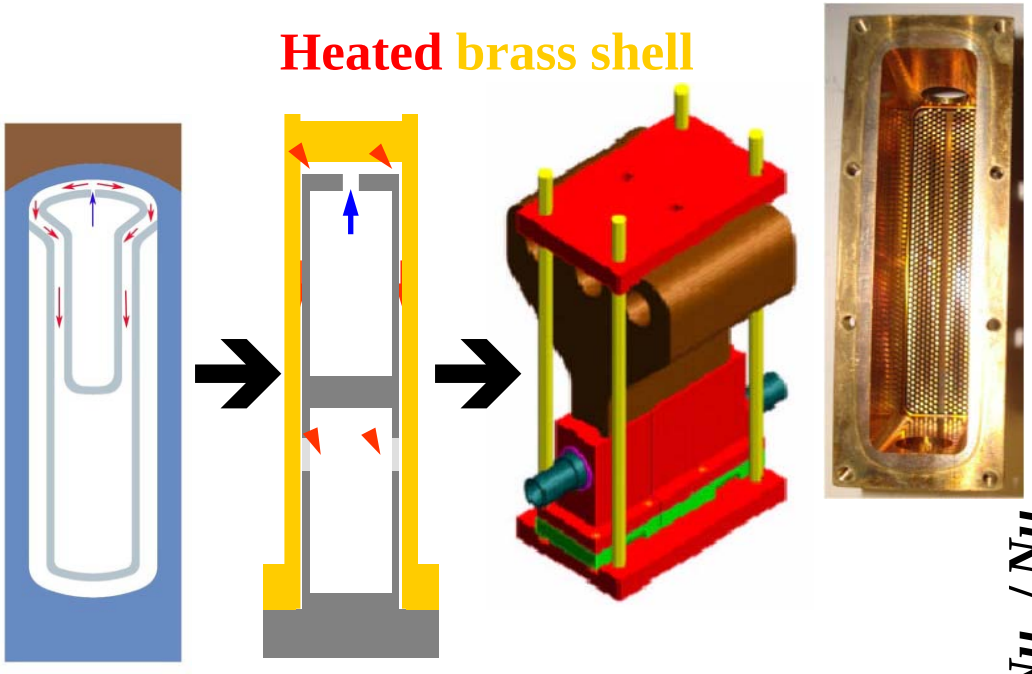

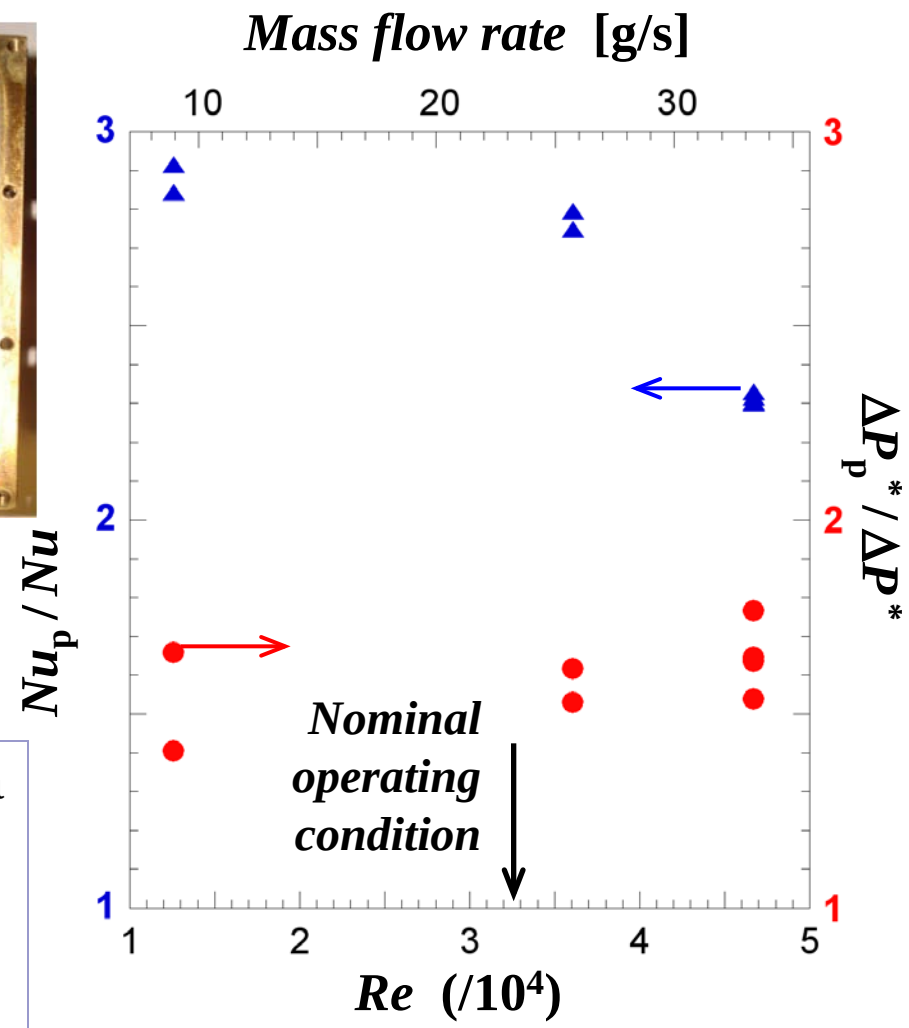

- Pin-fins with ~260% more surface area improve cooling performance by **~150%–200%** while increasing pressure drop by **~40–70%**
- h > 50 kW/(m²·K) is possible

Georgia Institute of Technology

The T-tube divertor was developed in ARIES-CS

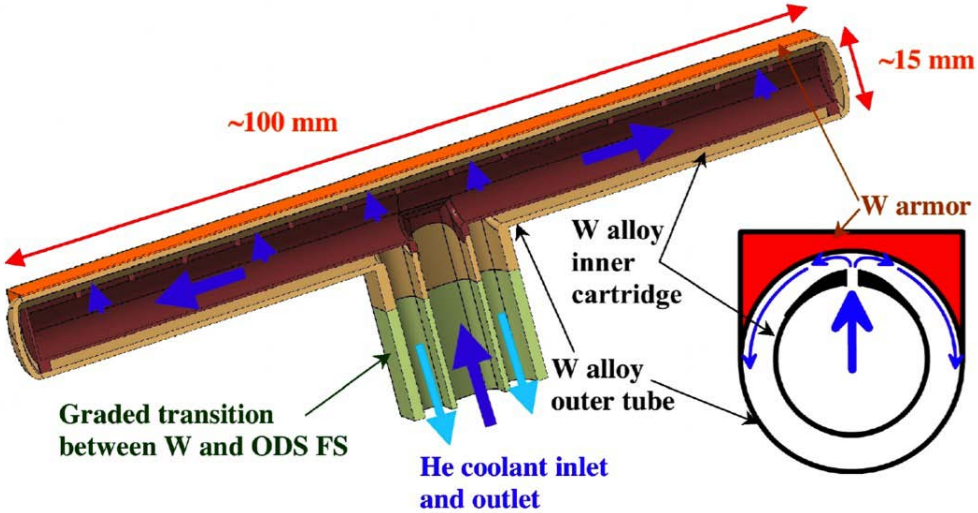

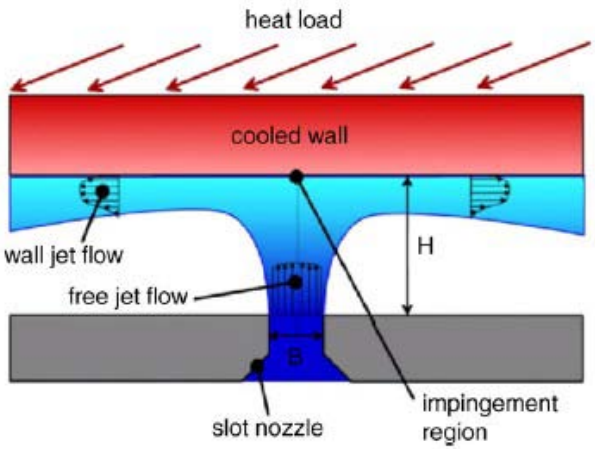

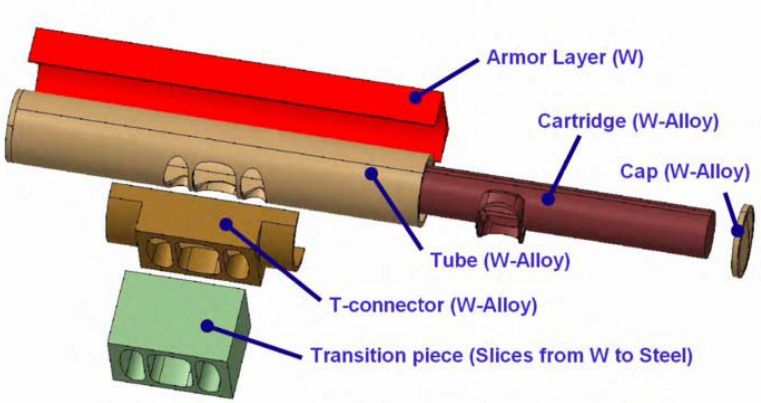

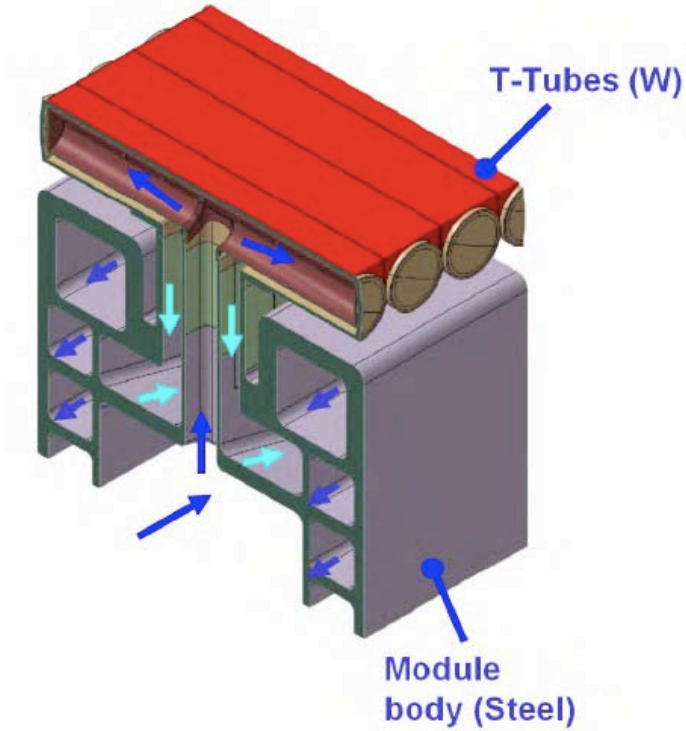

T. Ihli, A.R. Raffray, S. Abdel-Khalik, M. Shin, ARIES Team, Design and performance study of the helium-cooled T-tube divertor concept, Fusion Engineering and Design **82** (2007) 249–264.

The T-tube design was optimized by tailoring the inlet channels and slot width

- Tapering reduces eddies
- More uniform slot flow results
- Further shape optimization is ongoing, accounting for spatially varying heat flux

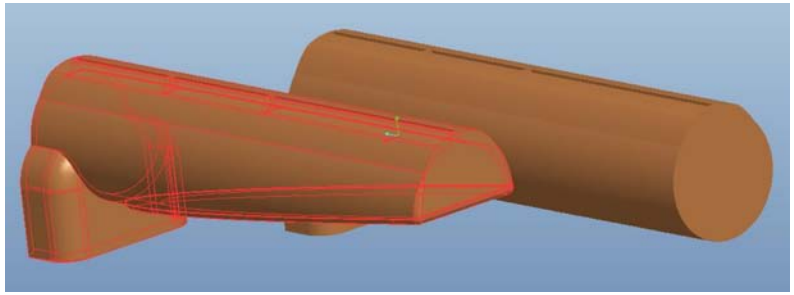

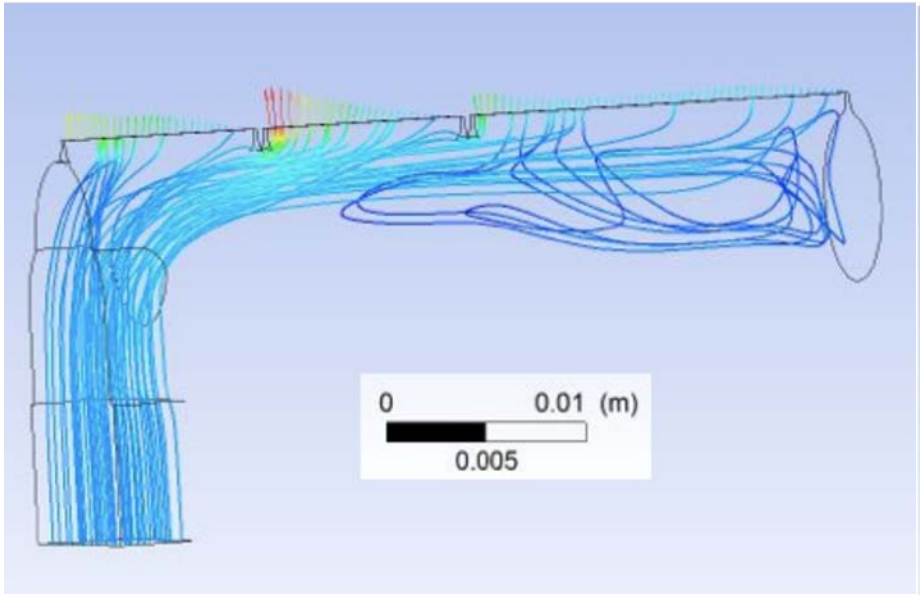

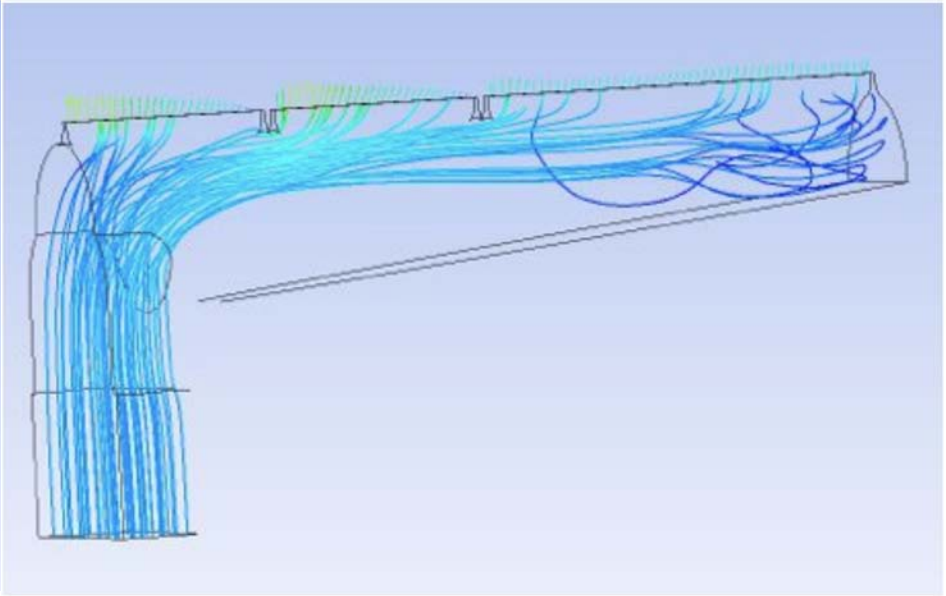

The design window based on *temperature limits* allows up to 13 MW/m²

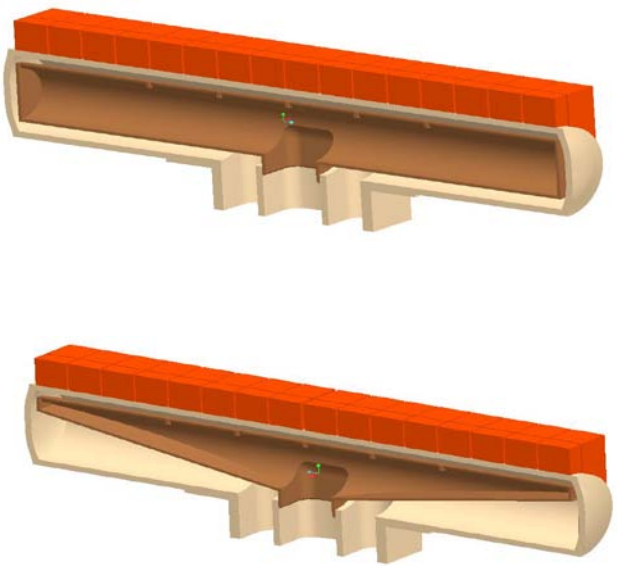

By reducing the slot size from 0.5 to 0.45 mm, the heat flux limit increased from 11 to 13 MW/m²

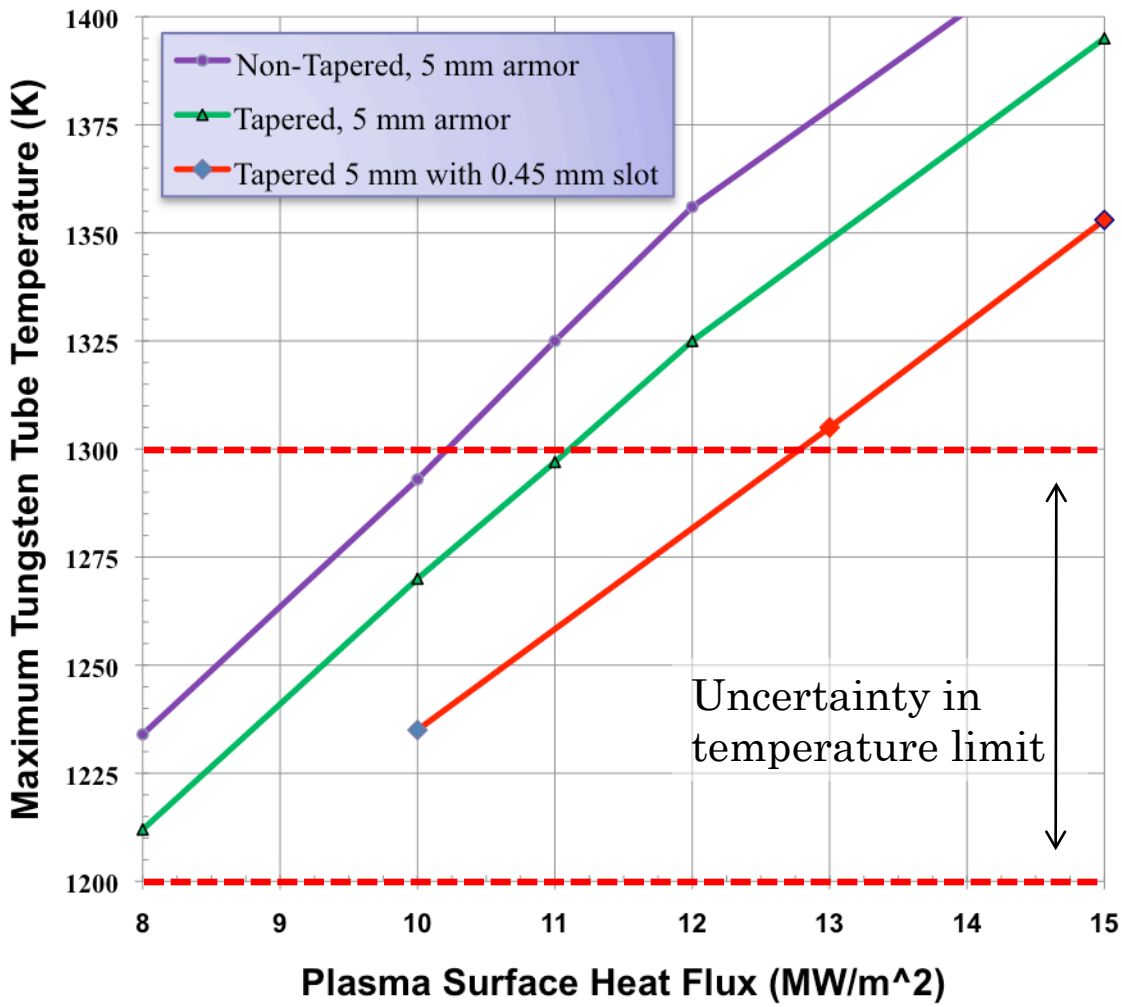

The design window based on 10% *pumping power* limit also allows up to 13 MW/m²

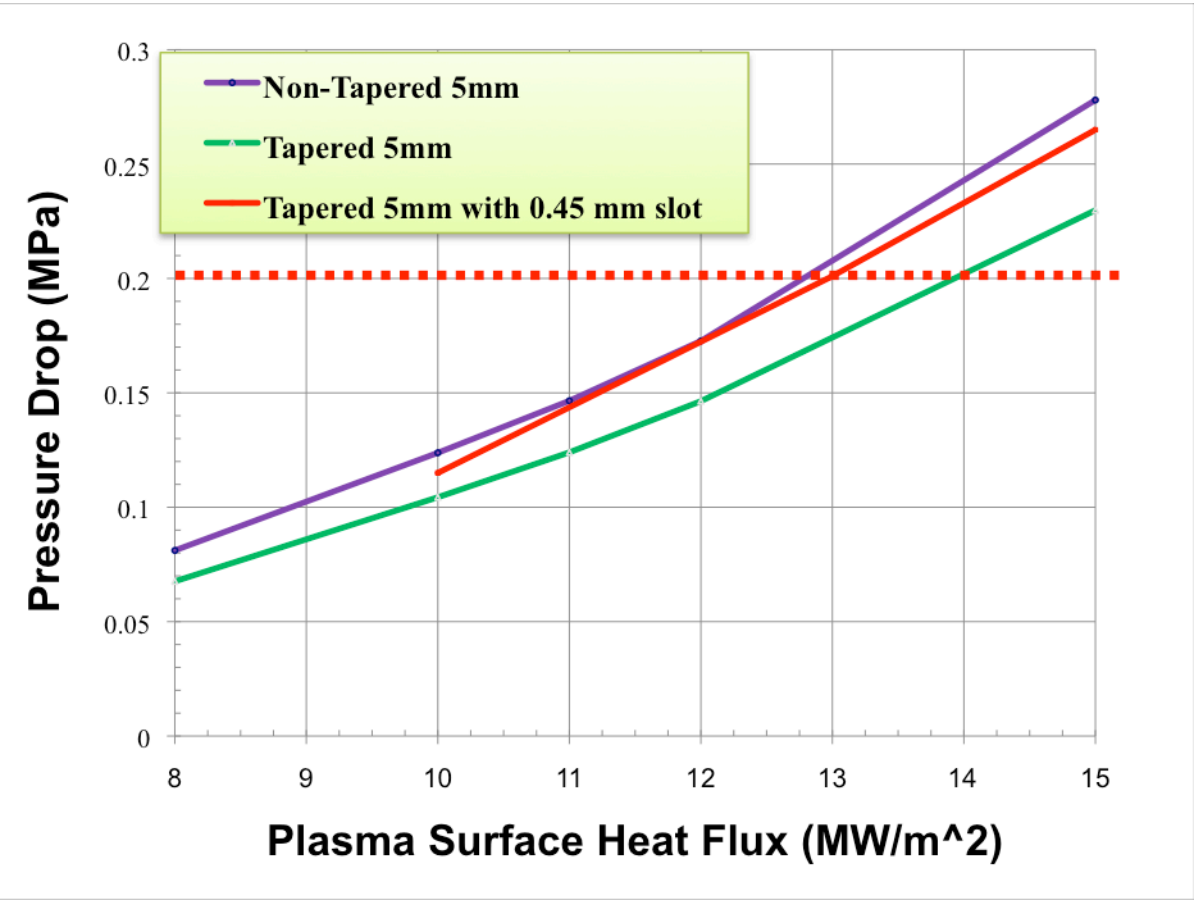

Note: these calculations all assume constant heat flux. Spatially varying profiles will allow higher local peak values.

The EU finger design was modified

- No transition joint between W and FS
- Transition is made at the end of the inlet manifold
- We also added a 1-mm inner shell for double containment
- Higher reliability is expected

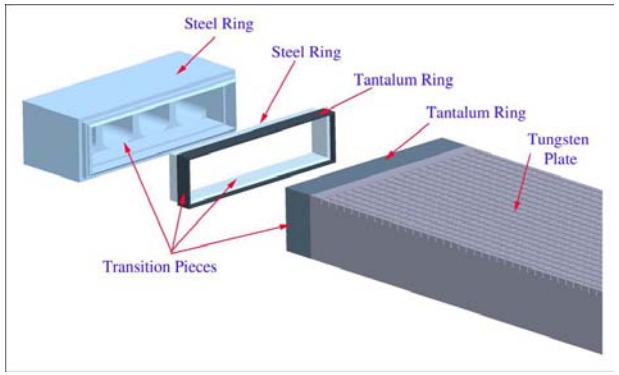

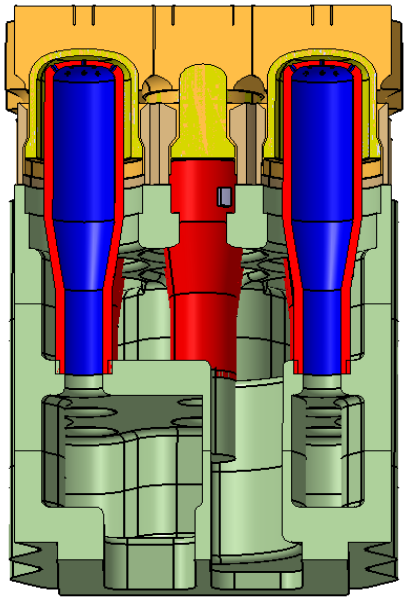

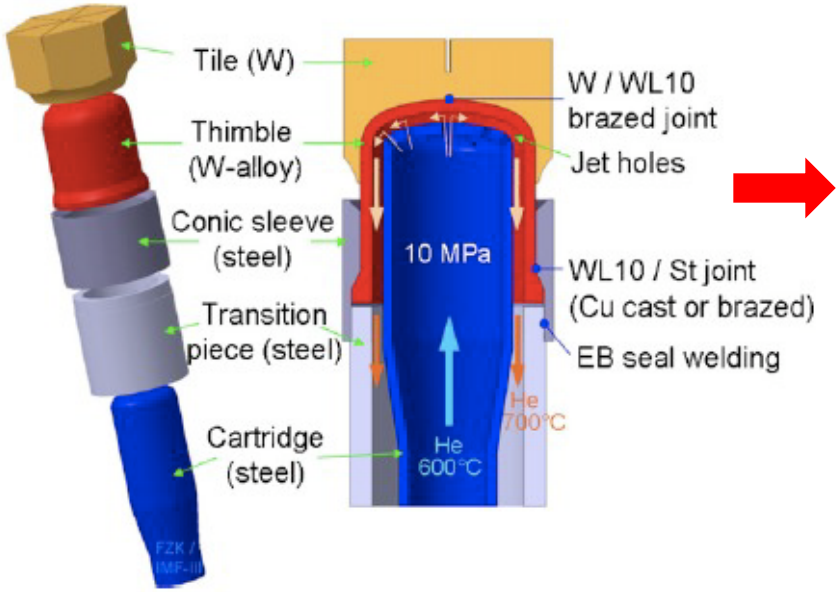

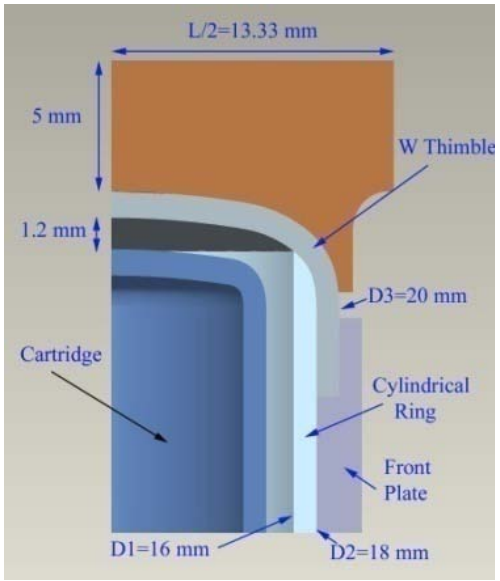

Detail on the new finger configuration

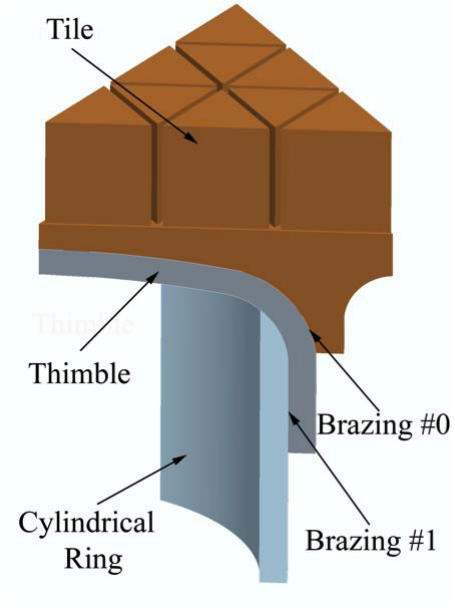

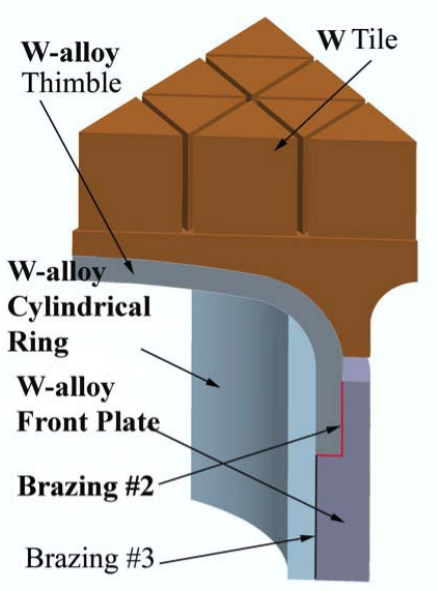

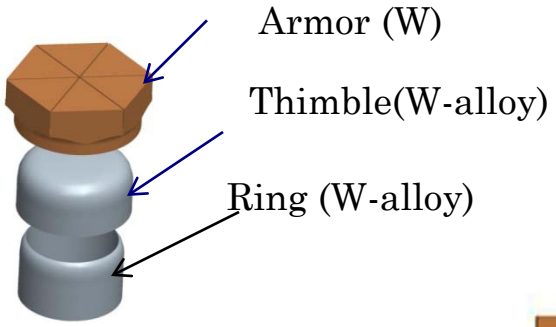

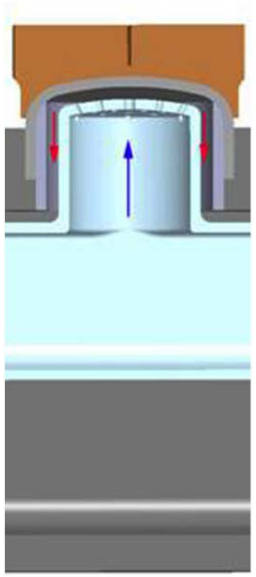

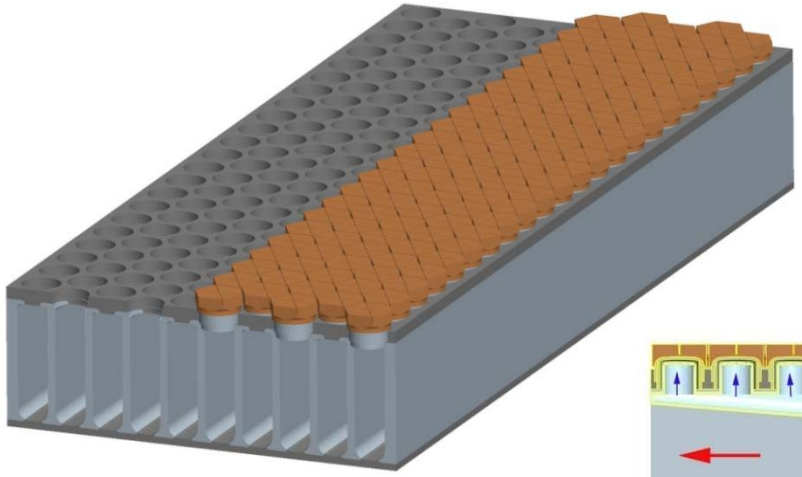

Fingers can be adapted into the manifold arrangement for the plate design concept

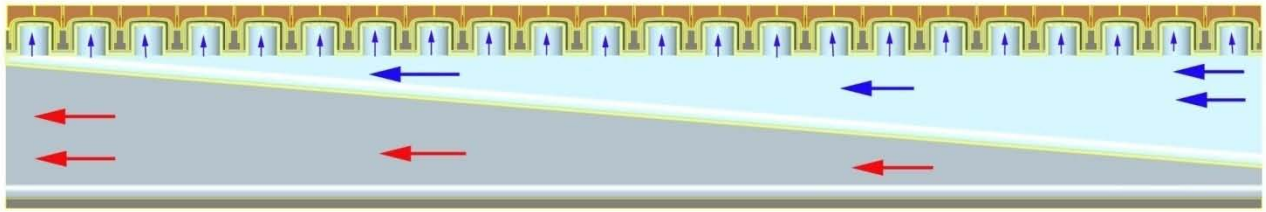

Fingers can be combined with slot jets for localized HHF handling capability and minimum units

- Cartridges with both slots and fingers can be combined
- Limit fingers to zones with the highest heat flux

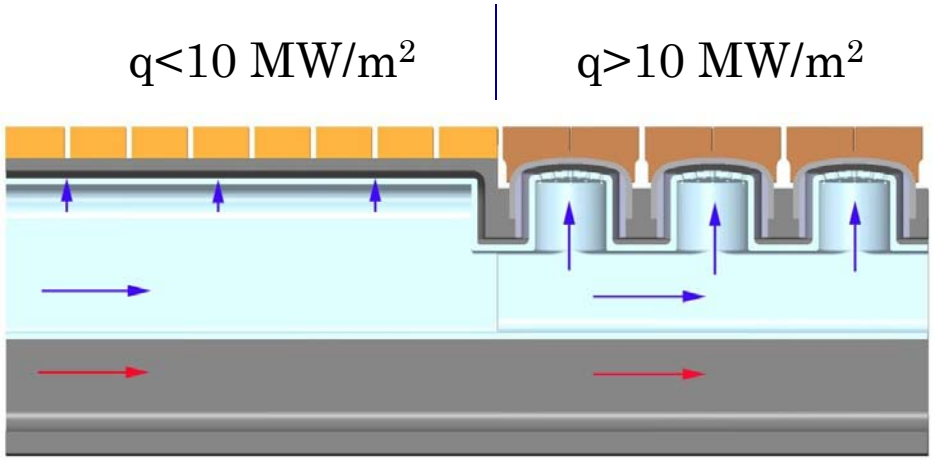

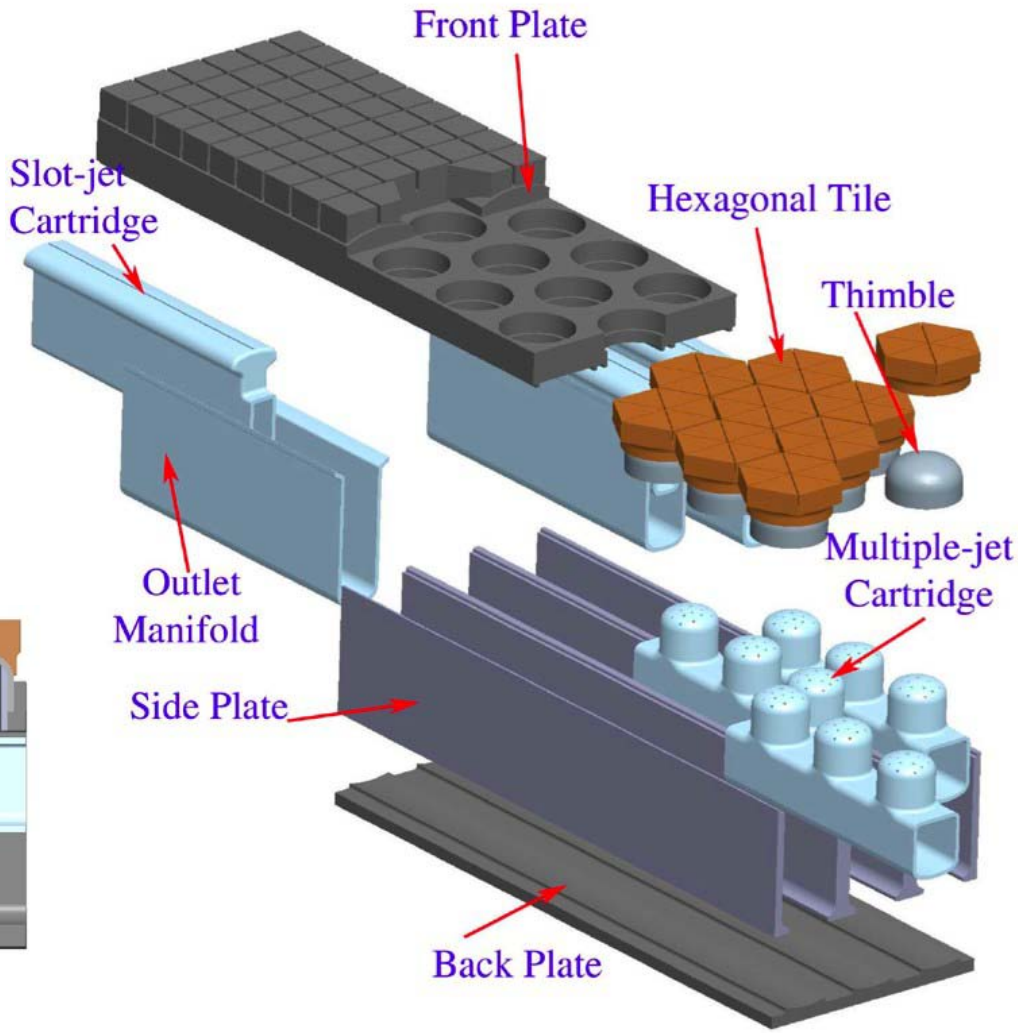

The jet configuration was optimized

- Temperature, pumping power and stress limits are the major reason for heat flux limits on plasma-facing components
  - **Temperature is the most limiting constraint**
- Optimizing the layout of the jets (jet sizes, number of the cooling jets) can improve heat transfer with acceptable pressure drop
- Iteration between thermal analysis and jet locations was performed to reduce the peak W temperature

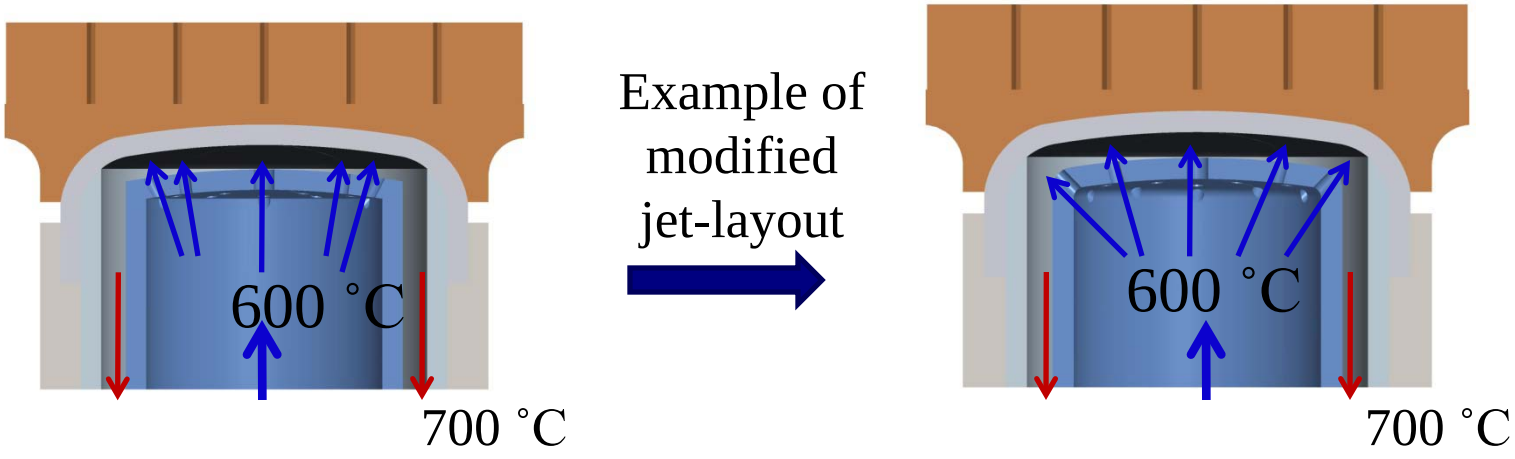

The finger divertor can handle 15 MW/m² without exceeding temperature or pumping power limits

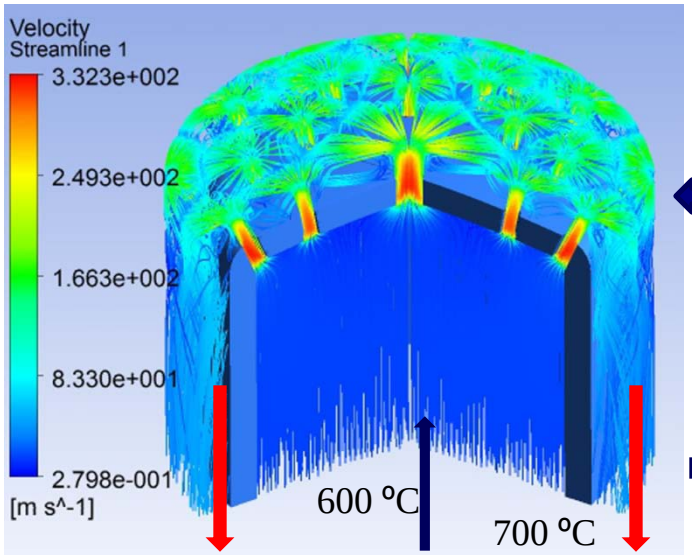

Velocity

Wall heat transfer coefficient

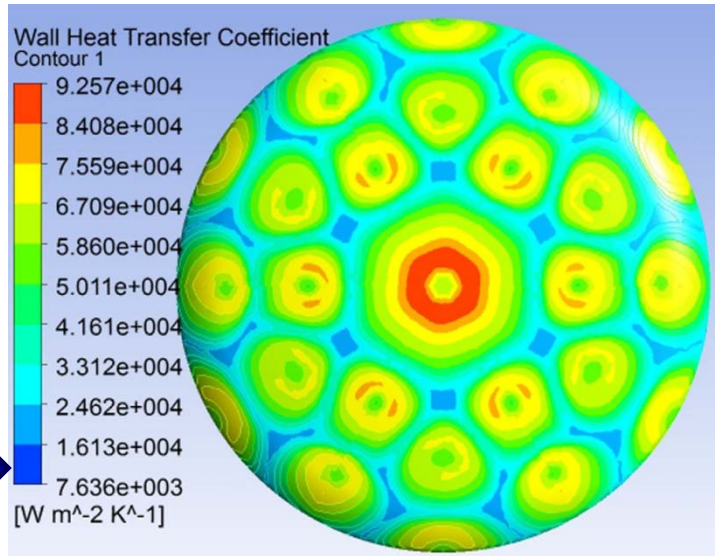

$q''=15\ MW/m^2$
$q_v=17.5\ MW/m^3$
$T_{in}/T_{out}=600/700\ ºC$
P=10 MPa
$V_{jet}=332\ m/s$
$H.T.C=9.257x10^4\ W/m^2K$
$P_p/P_{th}=9.9\%$
$Max.T_{armor}=2243\ ºC$
$Max.\ T_{thimble}=1295\ ºC$
$Min.\ T_{thimble}=864\ ºC$

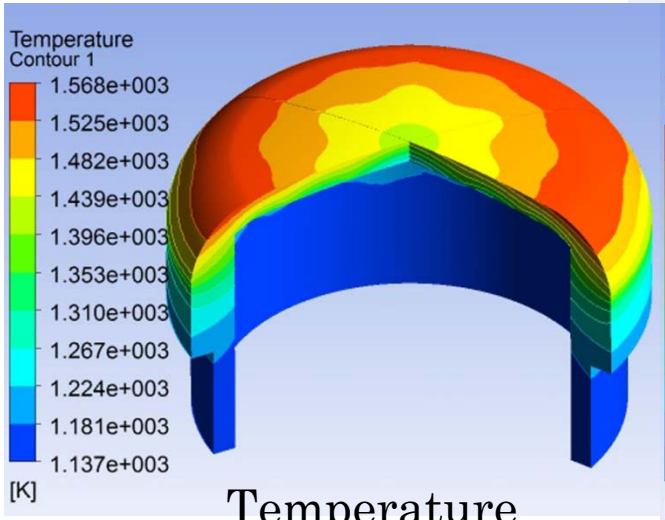

Temperature

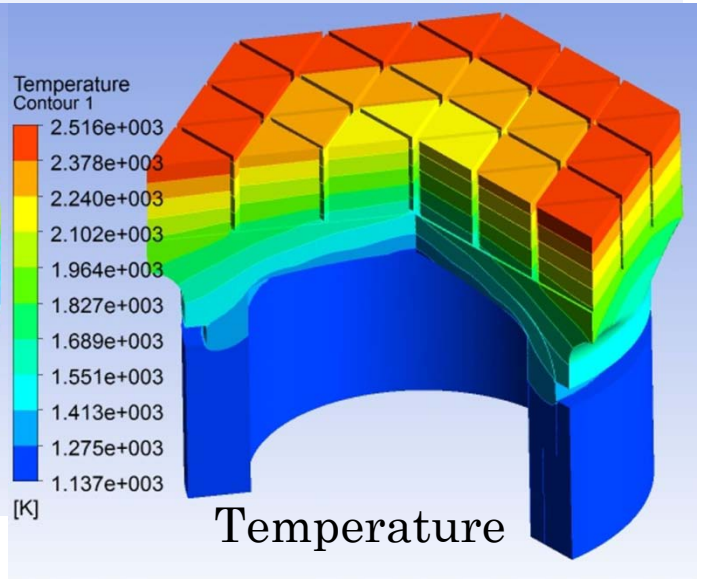

Temperature

Results of elastic stress analysis of the modified finger

- Thermal loads: q”=15 MW/m^2, q_v=17.5 MW/m^3
- Safety factor = Allowable stress($3S_m$) / Maximum nodal stress (combined primary and secondary stresses)
- The safety factor <u>must be >1</u> (to meet the ASME $3S_m$ code)
- The minimum safety factor is 0.3 in the armor and 0.9 in the thimble

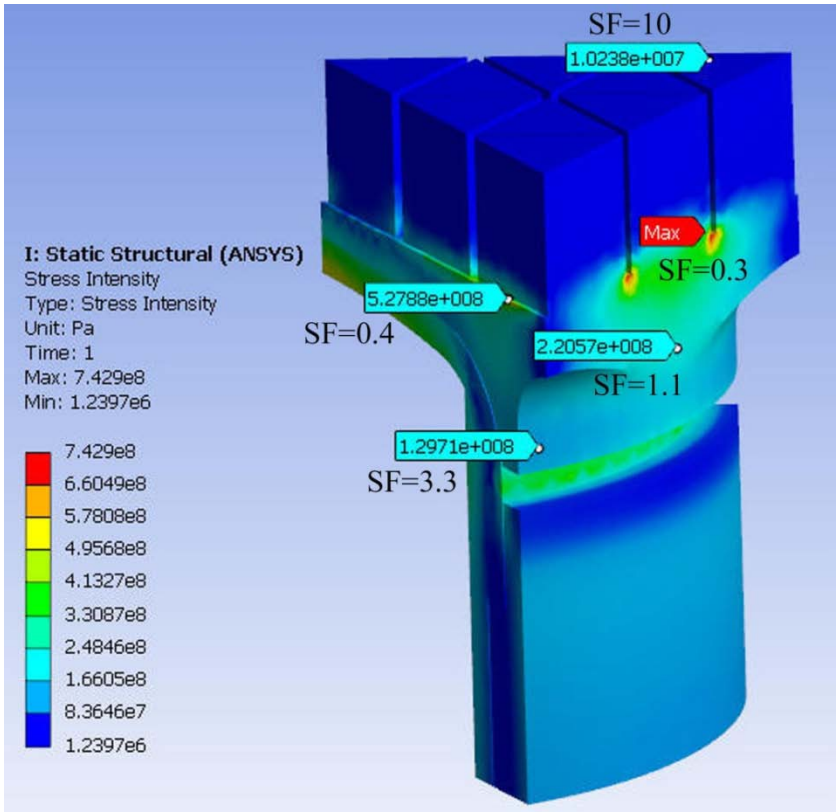

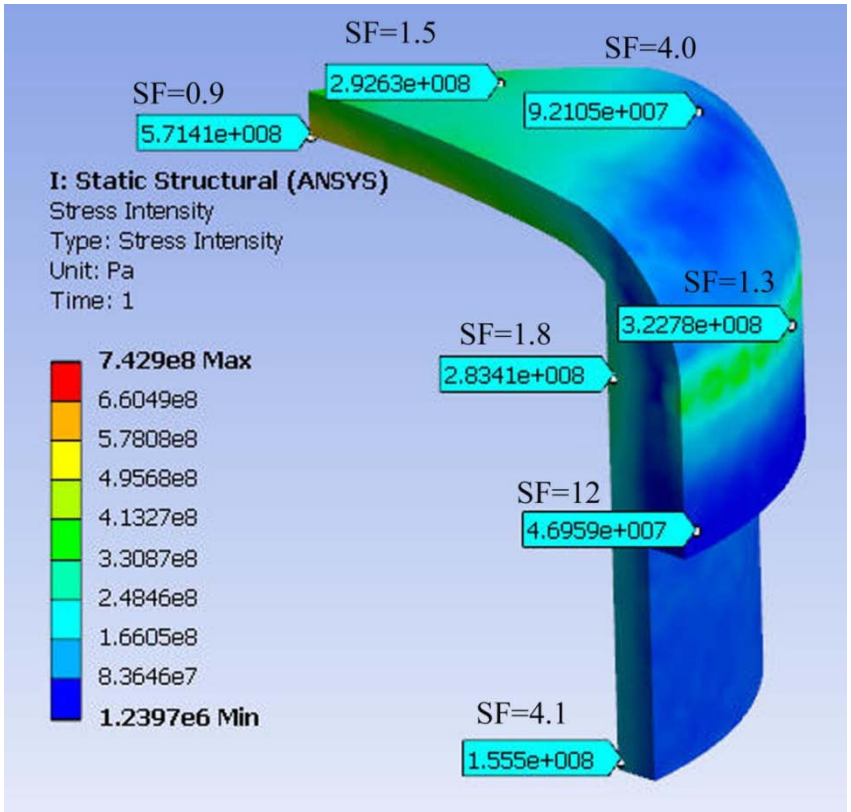

Principal design criterion for inelastic analysis

- In order to explore the limits of component performance, we do not restrict ourselves to elastic design criteria (*i.e.* $3S_m$)
- One simple inelastic failure criterion is based on accumulated strain:

$$\varepsilon_{inelastic}^{principal} < \varepsilon_{allowable}^{BaseMaterial}$$

where $\varepsilon_{inelastic}^{principal}$ is the maximum value of the principal strains accumulated over the operating life, and

$\varepsilon_{allowable}^{BaseMaterial}$ is 1/2 of the uniform elongation.

- Other design criteria must be applied, as appropriate (*e.g.*, ITER structural design criteria). Ideally, full nonlinear time-dependent analysis can provide full failure mode predictions.

Design criteria are satisfied by nonlinear stress analysis

- Bilinear isotropic hardening material model is utilized
- Allowable plastic strain (50% of uniform elongation) for pure W is 0.8% @270ºC and 1.0% @1200ºC.
- Operating temperatures for heat flux up to 15 MW/m^2:
  - VM-W (thimble + cylindrical ring): 800 <T<1300 ºC
  - Pure W (armor): 1000<T<2300 ºC
  - WL10 (front plate): 800<T<1300 ºC)
- The maximum plastic strain is ~0.13% in the armor and 0.04% in the thimble.

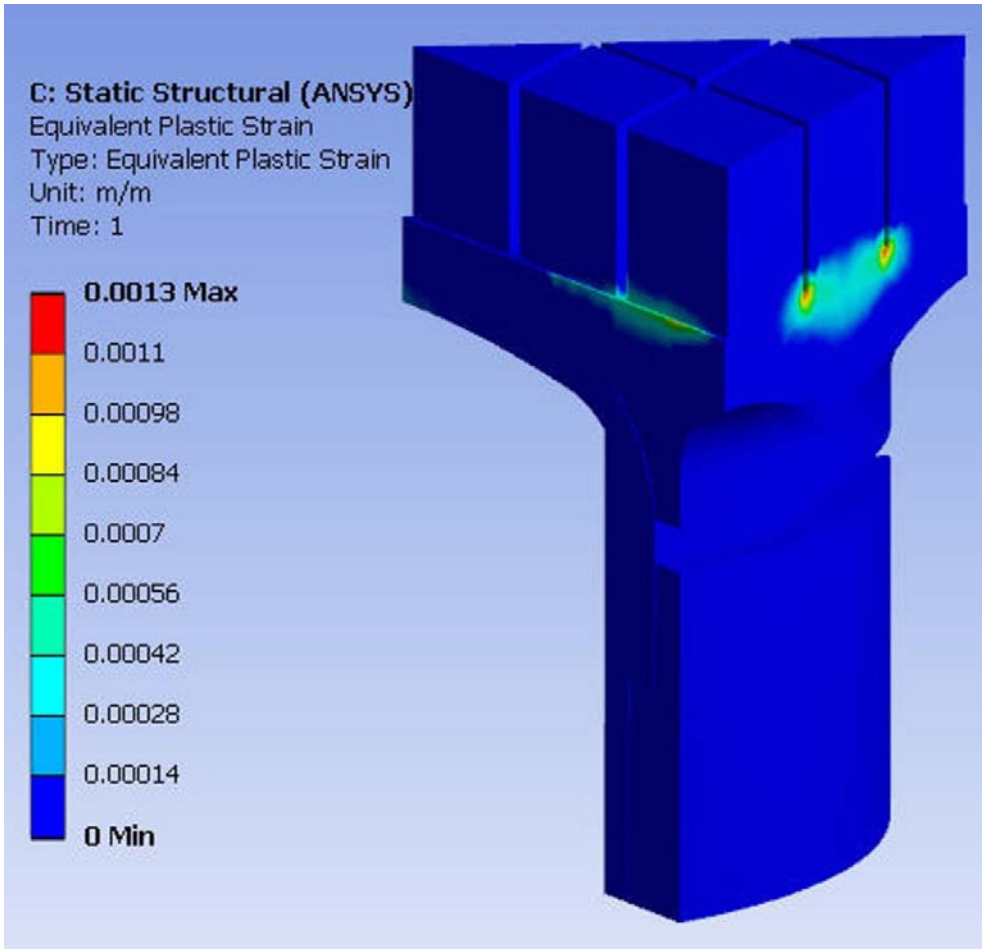

Mechanical behavior of W in the divertor

1. Elastic-plastic stress analysis suggests temperature limits of W likely will be more limiting than yield strength.
2. The limited, non-overlapping temperature window is the problem.
3. Crack growth may also dominate; fracture mechanics work is ongoing.

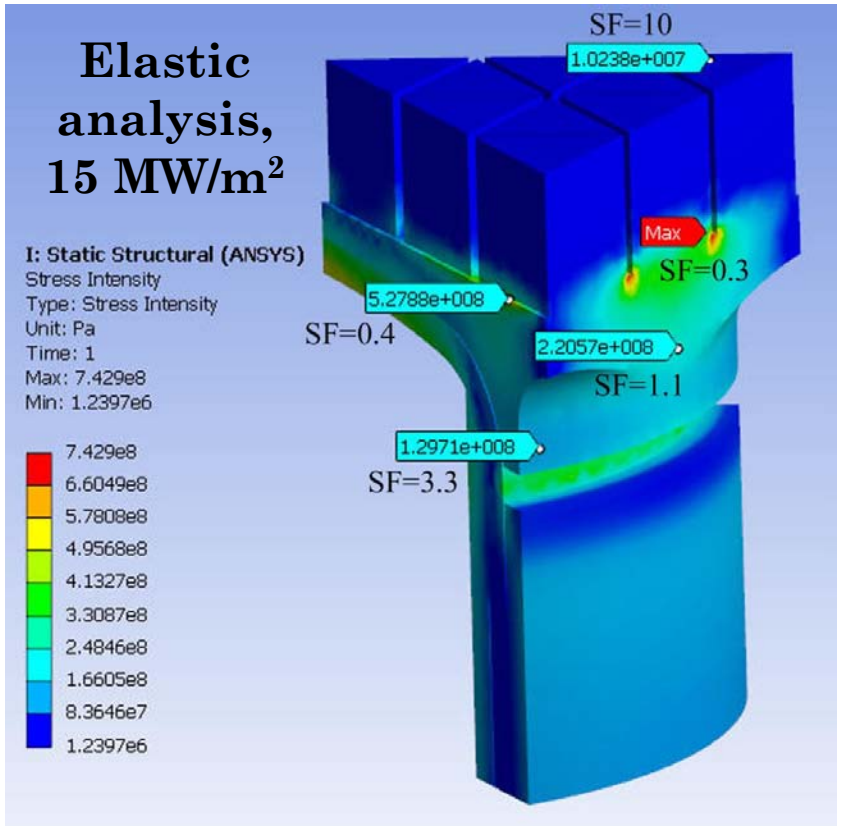

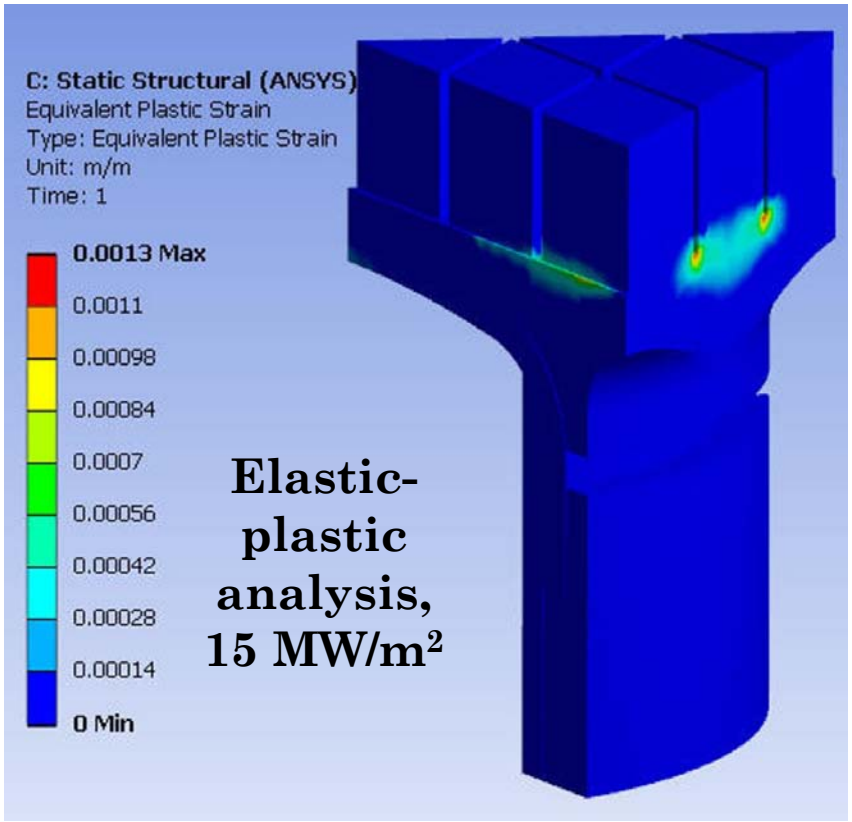

Summary and future plans

1. Progress has been made on design and analysis of several advanced W/He divertor designs.
2. Our aim is to demonstrate a larger design window for plasma-facing components under "normal operating conditions" (15 MW/m^2).
3. New efforts on elastic-plastic analysis are well underway. Efforts to model creep are also planned.
4. We will also quantify the limits under a select number of "off-normal" operating conditions.