Segmentation of internal components and impact on maintenance for DEMO

F. Cismondi
E. Magnani
L.V. Boccaccini

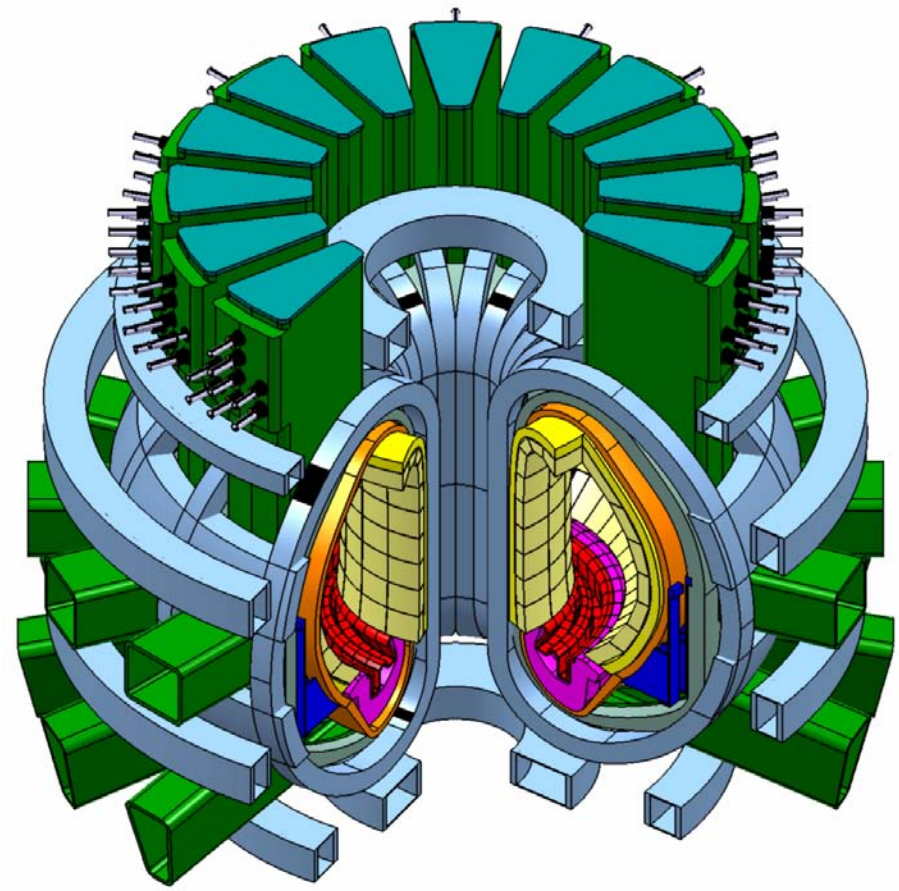

This presentation includes the works done under EFDA Contracts by CEA, EFET, FZK, and HAS

Summary

1) **From Large Module (LM) to Multi Module Segment (MMS)**
   - LM Origin
   - LM Segmentation
   - Critics to LM
2) **Multi Module Segment (MMS) – Concept description**
   - MMS Segmentation & vertical maintenance strategy
   - MMS Advantages
   - MMS Issues
3) **Multi Module Segment – Application description**
   - Design Proposals of FZK,CEA, and EFET
4) **Multi Module Segment - Open Issues**

1

From Large Module to Multi Module

From Large Module to Multi Module

Origin of the Large Module Concept

- The Large Module (LM) concept was originally adopted in the EU Power Plant Conceptual Studies (PPCS).
- This system was an adaptation to FPP of the ITER maintenance system: modules through equatorial ports.
- At the end of the PPCS the LM concept continued to be developed in the frame of DEMO Conceptual studies (EFDA tasks, e.g. [TW5-TRP-003-D1 & TW5-TRP-005-D2].
- For several reasons this concept has been abandoned and substituted by the Multi Module Segment.

FZK
2006

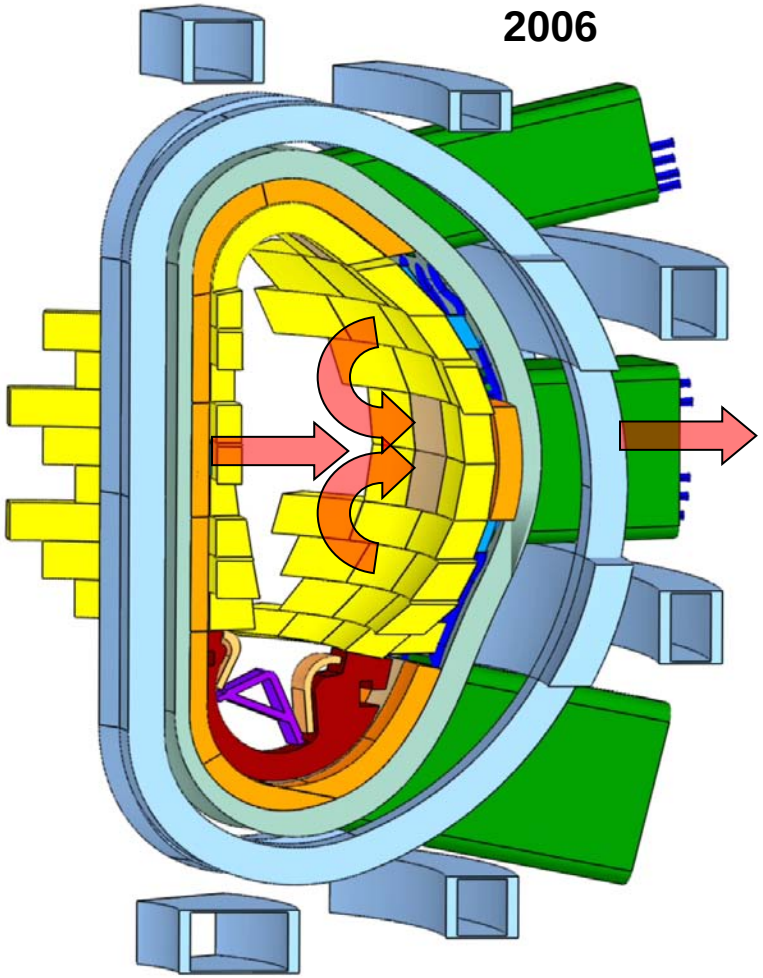

DEMO Sector with Large Modules [TW5-TRP-003-D1]

From Large Module to Multi Module

Large Module Segmentation for DEMO

- Basic concept of the Large Module: to keep the Blanket Modules as large as possible to reduce the number of maintenance actions.
- Additional constraints: limit the size to keep the weight of each module and the EM forces within the acceptable limits.
- The compromise was a blanket module of: 1m x 2m x 0.8m.
- The total number of modules was

300 - 400 for R=8.6 m and FP=3300MW

240 - 320 for R=7.5 m and FP=2500MW

[TW5-TRP-003-D1]

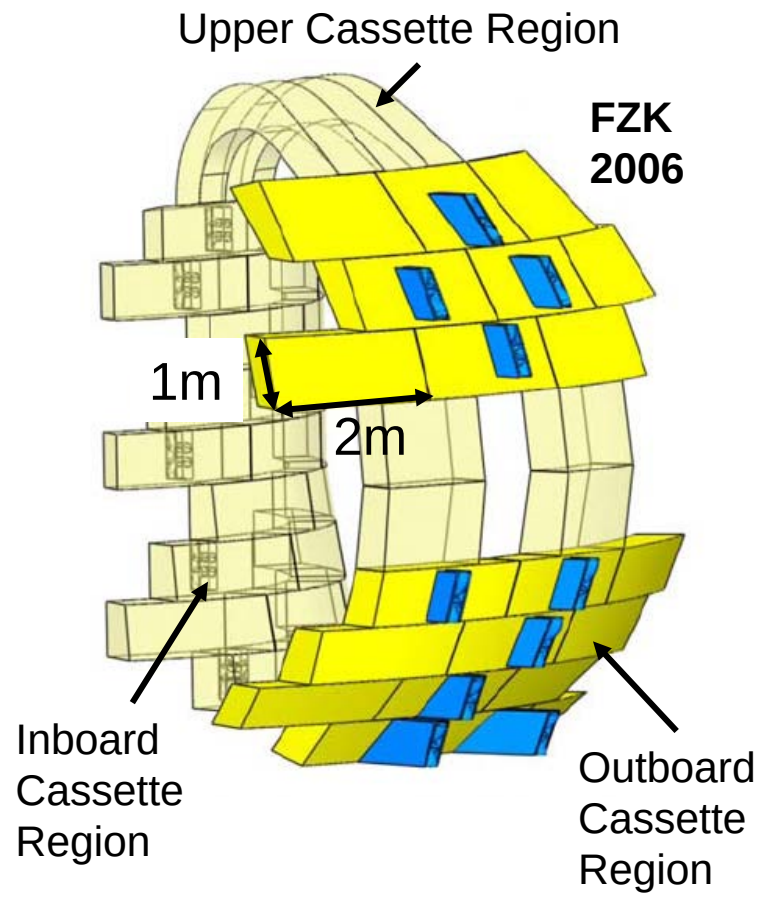

Blanket Segmentation with Large Modules [TW5-TRP-003-D1]

From Large Module to Multi Module

Critics to Large Module 1/3

- The RH system was developed for a low availability machine like ITER.

- DEMO Blanket is supposed to be replaced every 5 Full Power Years and the availability of the plant should not be lower than 75%.

- The high number of separated modules and difficult 3D manipulations were a strong limitation to respect the availability requirement.

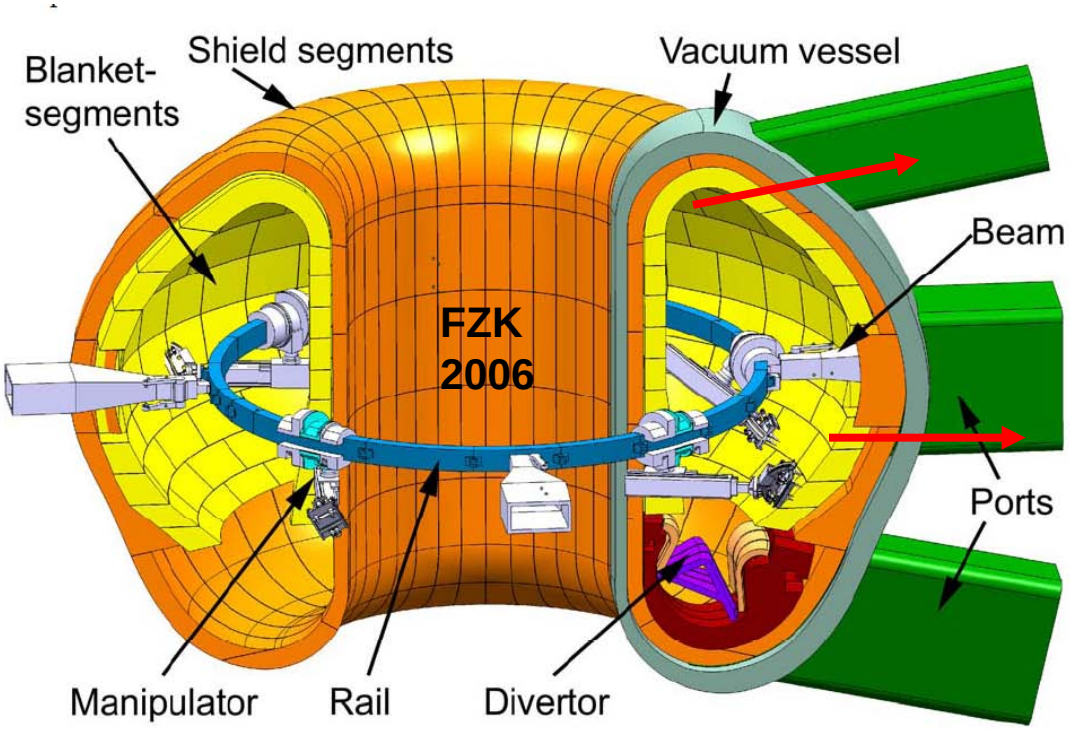

Maintenance strategy for Large Module [TW5-TRP-003-D1]

From Large Module to Multi Module

Critics to Large Module 2/3

- Main integration issue: accommodation of the large Helium pipes in the Vacuum Vessel and the definition of a RH strategy for pipes cutting/re-welding.
- Each module has dedicated flexible attachments and pipes to be cut and re-welded. This implies:
  - Pb. to respect the Limit of 1 appm of Helium
  - Dust inside the vessel
  - Difficult access
  - High number of actions

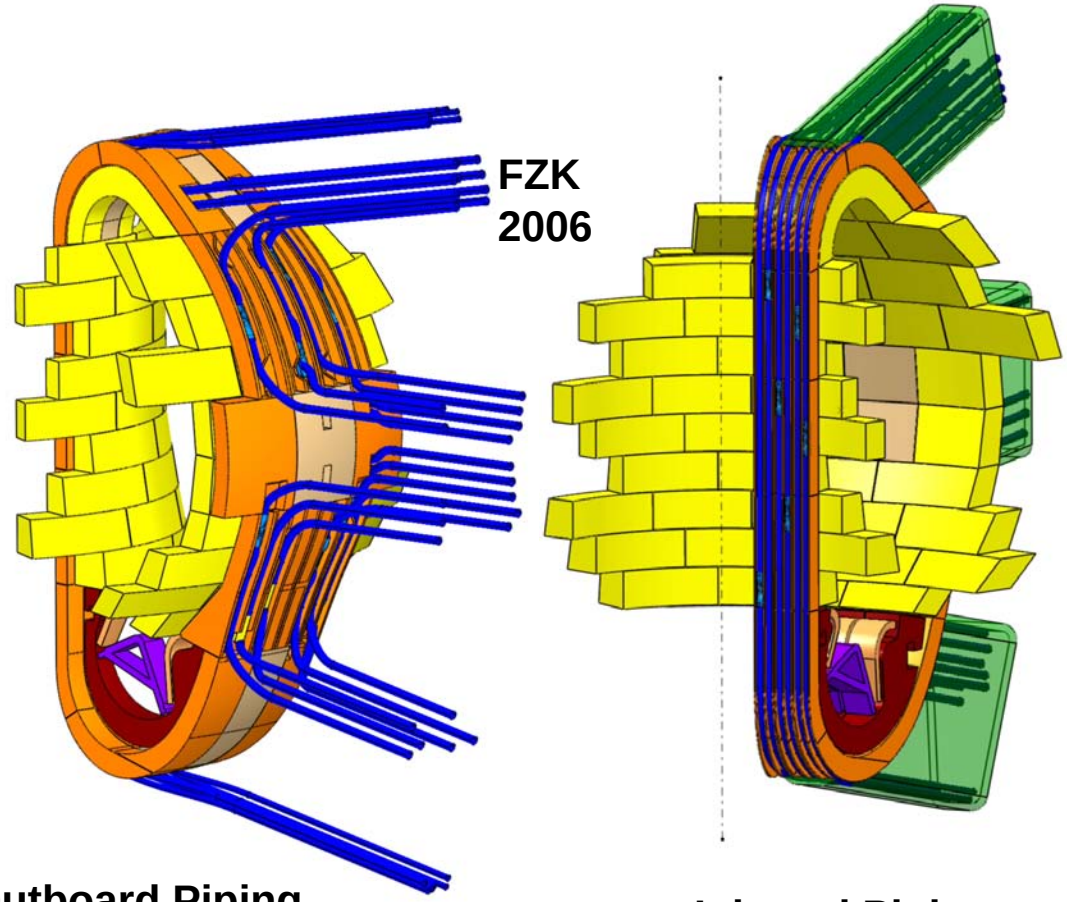

Outboard Piping

Inboard Piping

Blanket Segmentation with Large Modules [TW5-TRP-003-D1]

From Large Module to Multi Module

Critics to Large Module 3/3

- The high differential thermal expansion in DEMO (consequence of a **ΔT** of about **200°C**) requires integration strategies based on mechanical compensators.
- The flexible attachment system for the blanket modules has to be opened and closed remotely with limited access: through the gaps between the blanket modules or in alternative through holes in the blankets First Wall.

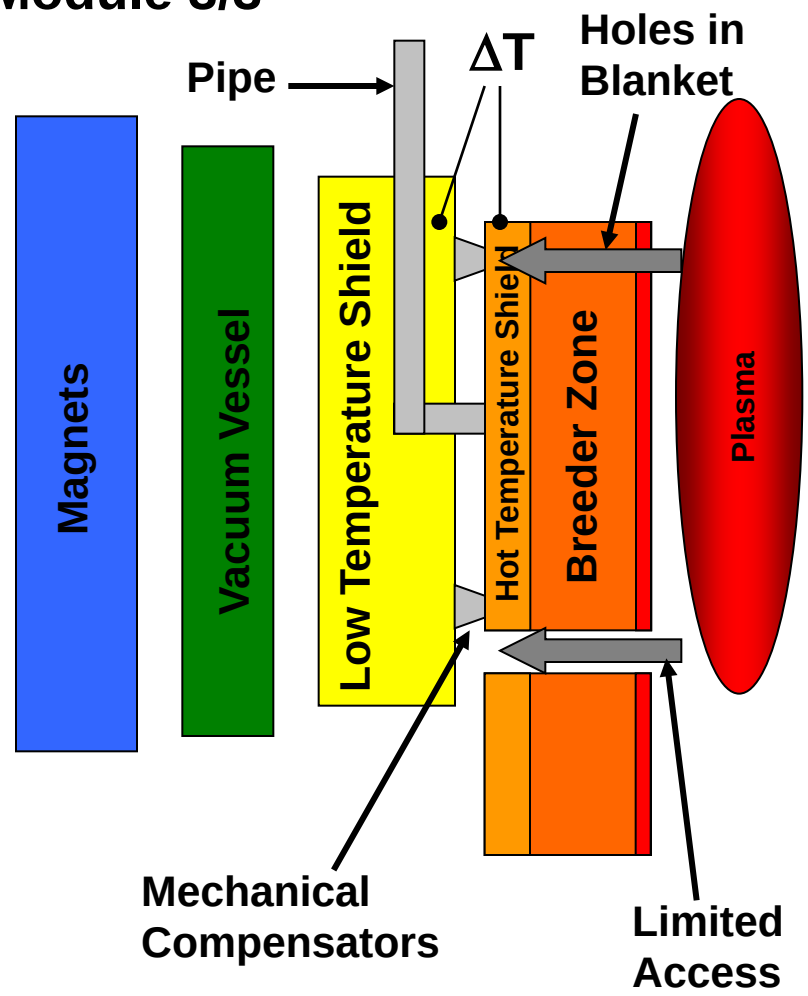

Schematic of DEMO cross section

2

Multi Module Segment

Concept Description

Multi Module Segment - Concept Description

To avoid or limit the problems related to Large Module, the vertical segmentation concept (Full Module Segment) has been repurposed in the so called “Multi Module Segment” (MMS). The basic idea is a vertical maintenance procedure exploiting upper ports.

In MMS concept the Blanket is separated in several modules all connected to the same manifold.

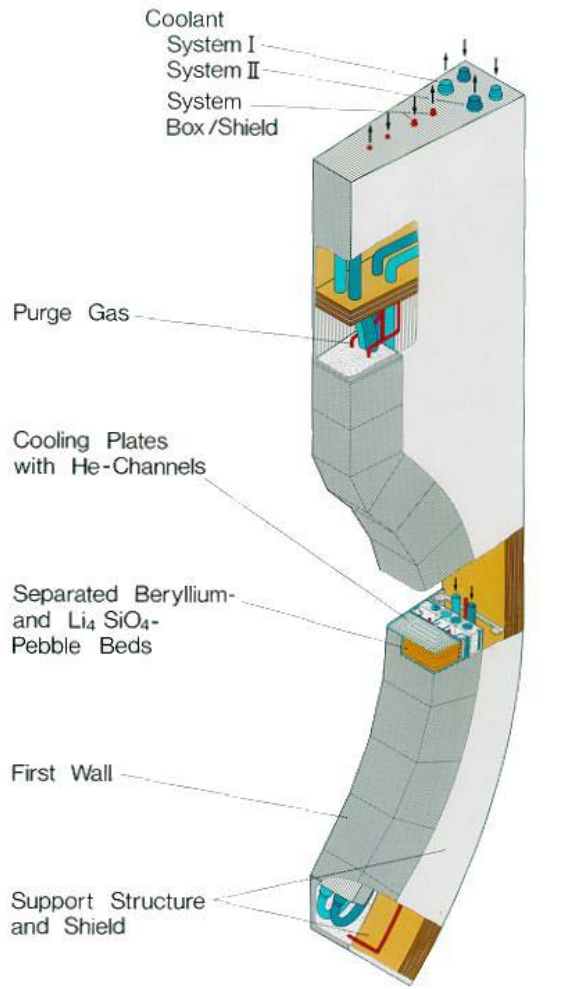

DEMO Outboard Full Module Segment (1995)

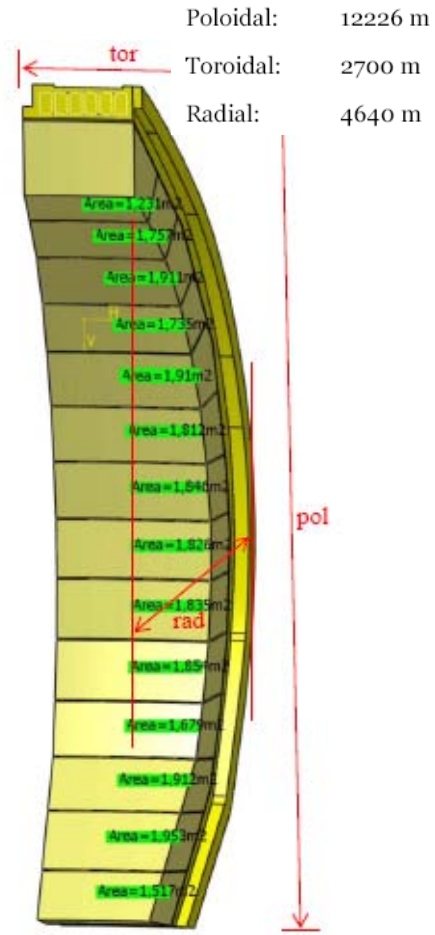

DEMO Outboard Multi Module Segment (2006)

Multi Module Segment - Concept Description

Advantages of the Multi Module Segment 1/3

- Only 2 or 3 upper ports have to be opened to extract & insert the MMS. The MMS are toroidally transported by RH maintenance tools inserted from the divertor ports and supported by divertor rails.
- Easier (with respect to LM) maintenance procedure for insertion & extraction of the elements.
- Vertical maintenance strategy allows the reduction of the number of elements to only 54 (in a 16 TF Coils scenario)

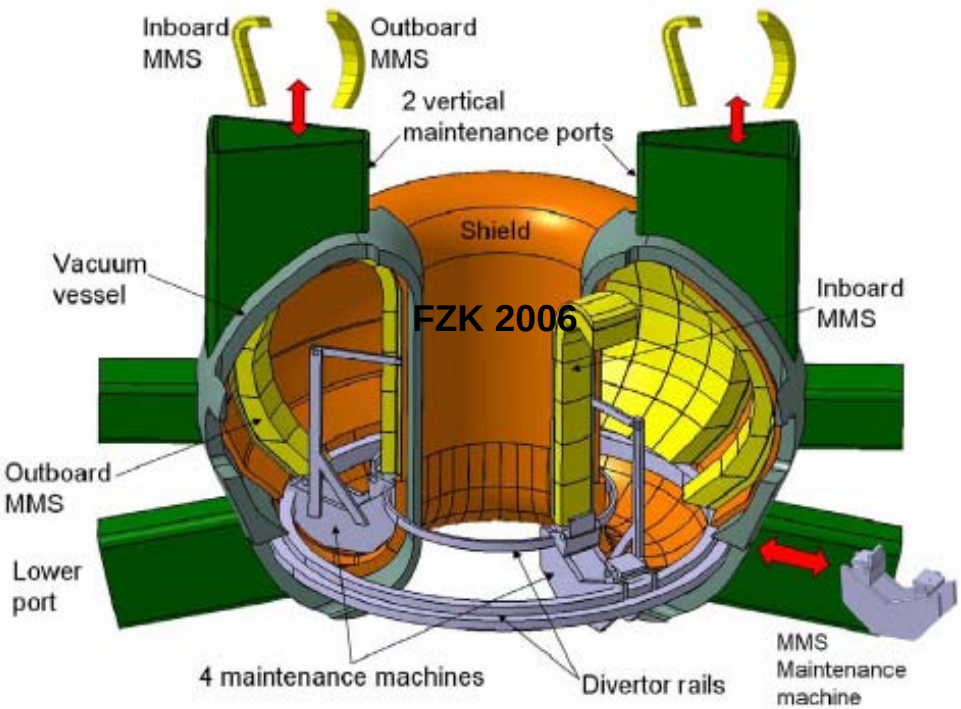

Verical Maintenance Strategy & Tools [TW5-TRP-003-D1]

Multi Module Segment - Concept Description

Advantages of the Multi Module Segment 2/3

- Reduced number of mechanical and hydraulics connections to be managed by RH.
- In one MMS the Blanket Modules are attached to the same manifold out-of-vessel. There is no single re-welding of each module inside the vessel.
- Easier compensation of thermal expansion.

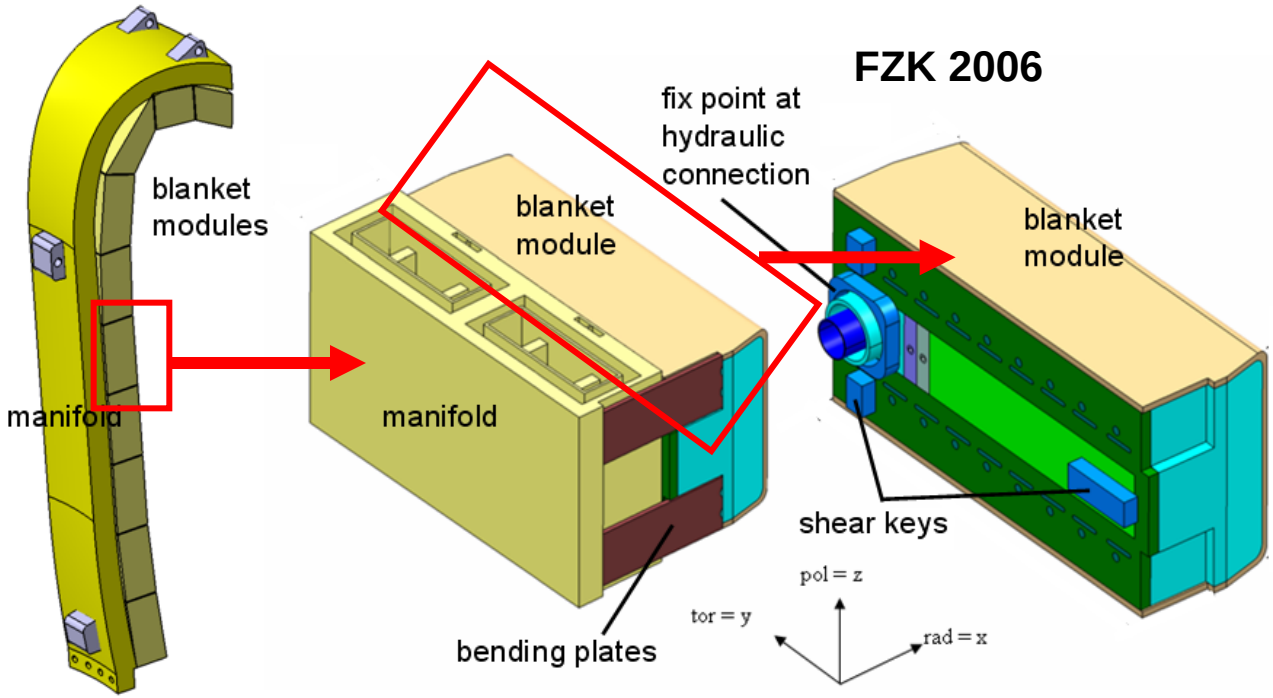

DEMO Blanket - Manifold – MMS
TW5-TRP-005-D2

Multi Module Segment - Concept Description

Advantages of the Multi Module Segment 3/3

- Collection of all hydraulic connections in the upper region where neutron fluence is lower and it is easier to respect the re-weldability limit of 1 appm Helium.
- Easy integration of thermal expansion compensators for pipes.
- Easy access for pipes cutting and re-welding (in-bore tools possible).
- Limitation of dust inside the vessel (consequence of cutting operations).

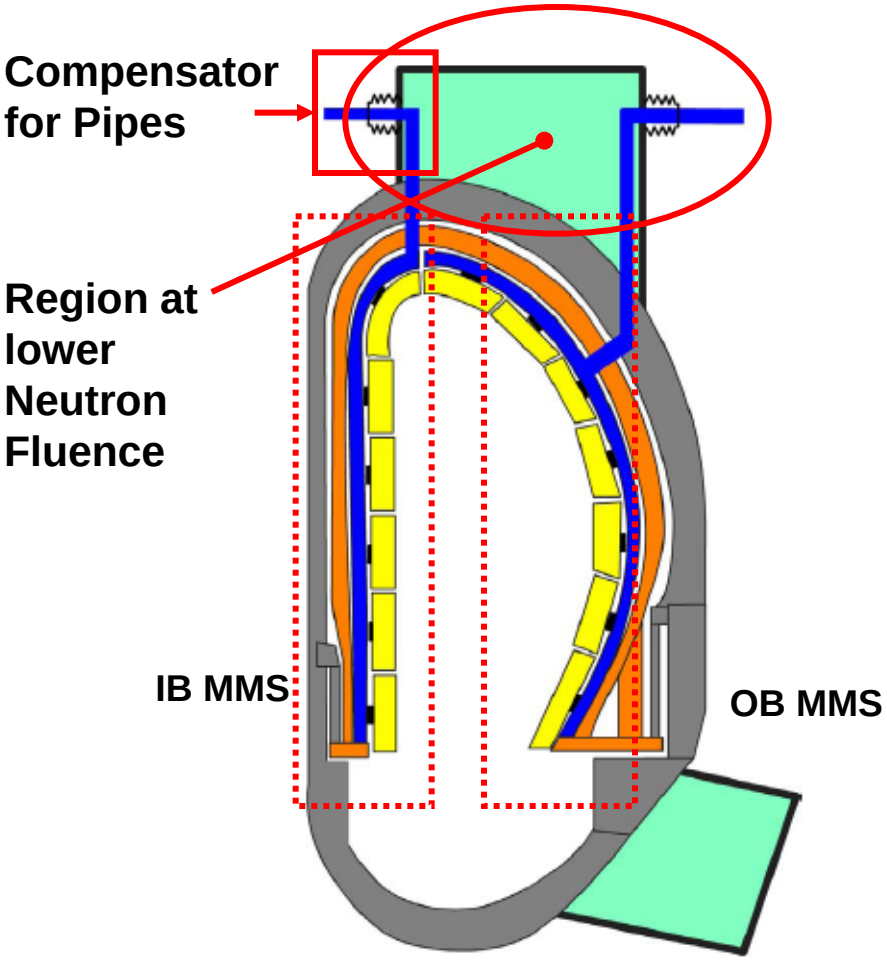

DEMO Cross Section MMS and Piping

Multi Module Segment - Concept Description

How the Thermal Expansion issue is solved in the MMS concept

For **Pipes** connected to the upper part of the manifolds, thermal expansion is compensated by **on purpose diaphragm-compensators** connected to the pipes themselves. In addition the lay-out itself of the pipes facilitate the compensation.

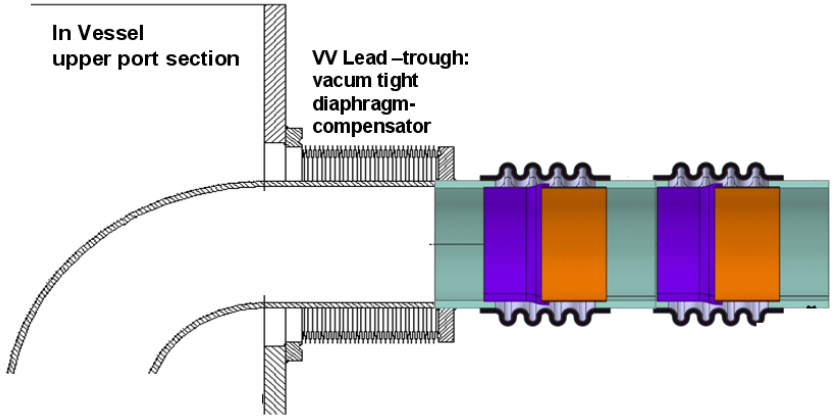

Diaphragm Compensator

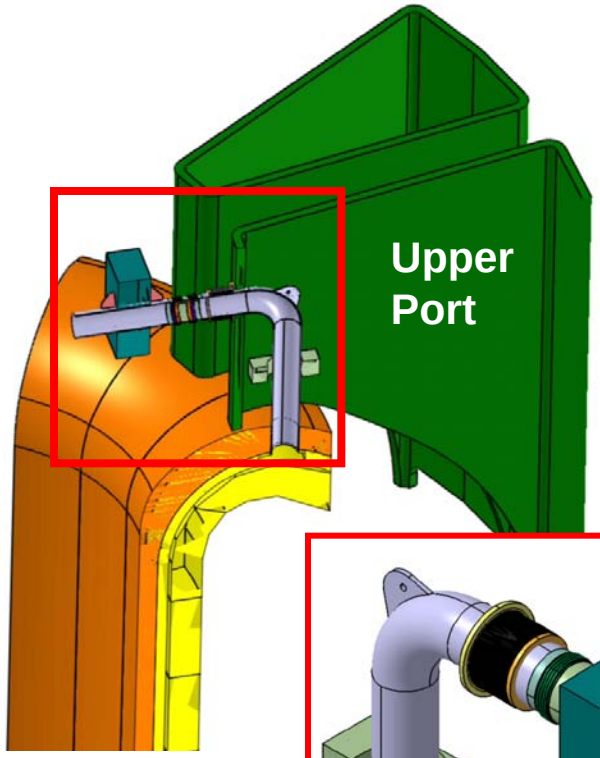

FZK 2006-2007

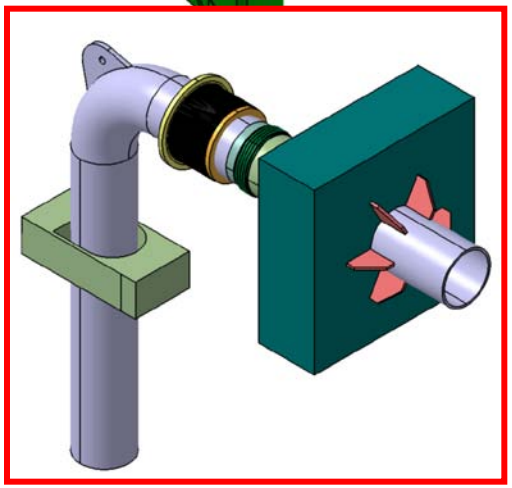

[TW6-TRP-007-D1]
&
[TW5-TRP-003-D1]

Multi Module Segment - Concept Description

How the Thermal Expansion issue is solved in the MMS concept

The thermal expansion of the **MMS** is compensated by the introduction of flexible bars called Bending Bars (BB):

BB connect high temperature components (MMS or High-T shield, 500-300°C) to low temperature components (Vacuum Vessel or Low-T Shield 100-150°C).

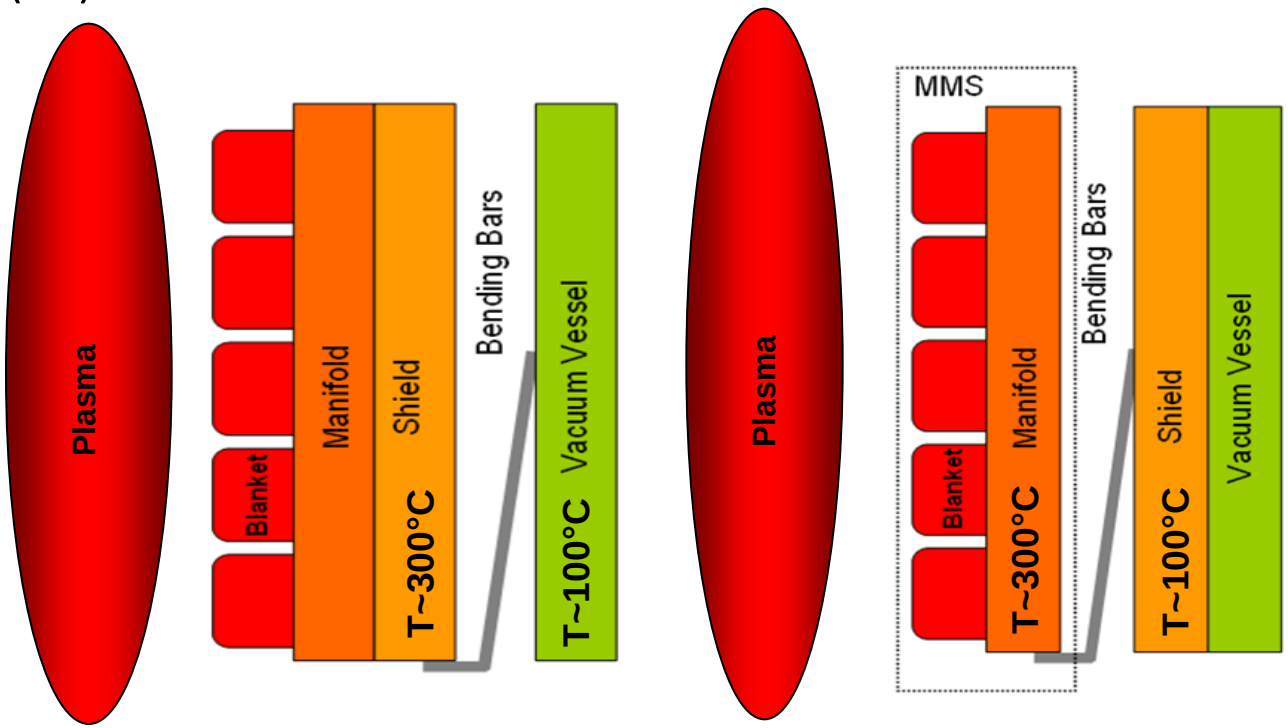

High-T Shield Concept **Low-T Shield Concept**

Schematic of MMS integration concepts

Multi Module Segment - Concept Description

The MMS Supporting Structure issue

Independently from the type of solution chosen for the shield: high or low temperature, the supporting structure concept for MMS can be a closed structure or a segmented structure.

- A **closed structure** is more difficult to assemble, but compensates the EM moments due to plasma disruptions in an easier way.
- A **segmented structure** is easier to install and dismantle (in RH operation), but the EM moments need to be compensated by the attachment system.

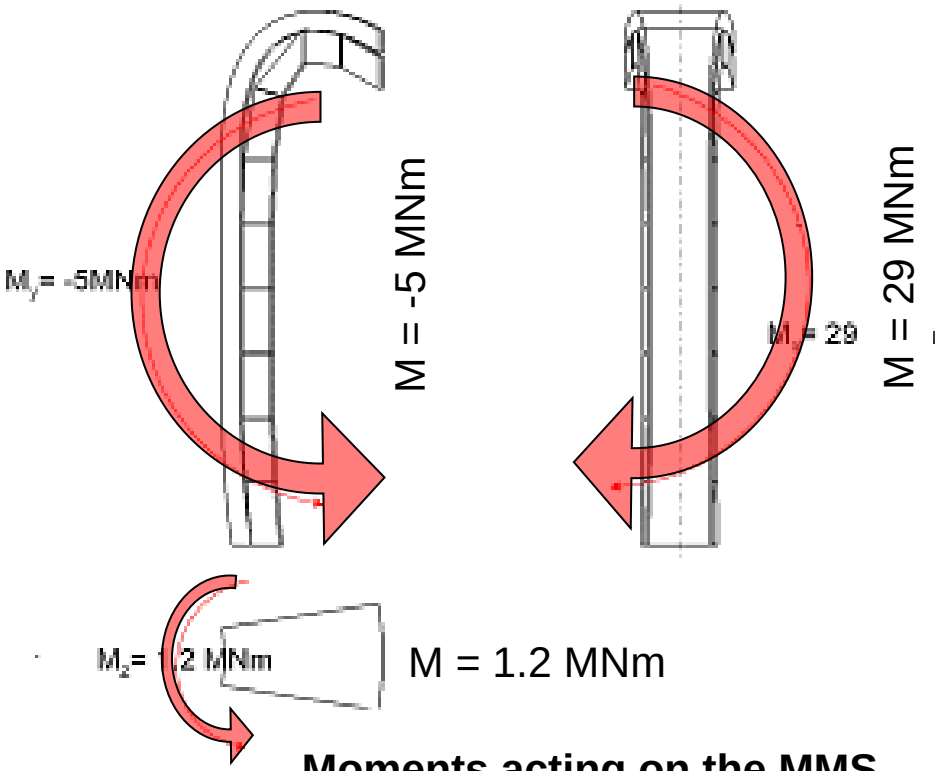

Moments acting on the MMS

TW5-TRP-004, 2006

3

Multi Module Segment Design Proposals

Multi Module Segment – Design Proposals

Multi Module Segments MMS

KIT Design

MMSs attached to a closed High-T shield hung to the Vacuum Vessel by vertical Bending Bars

CEA Design

MMSs are joint together and hung to a closed Low-T shield by Bending Bars and Toroidal Rings

EFET Variant Design

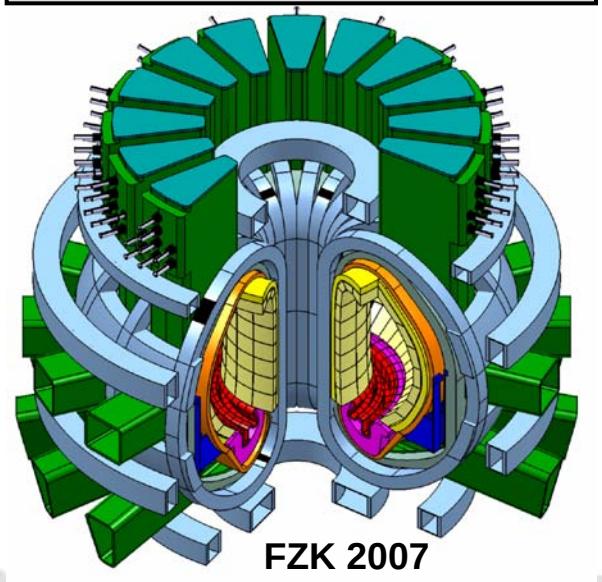

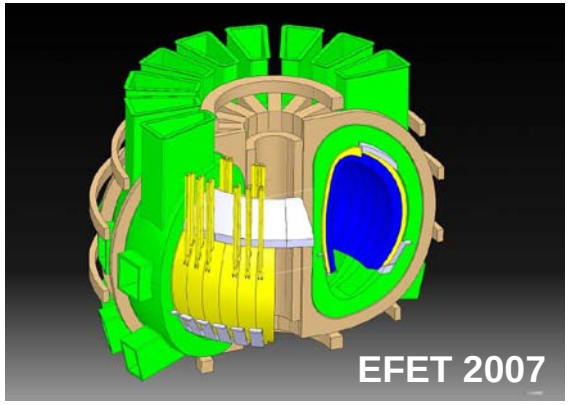

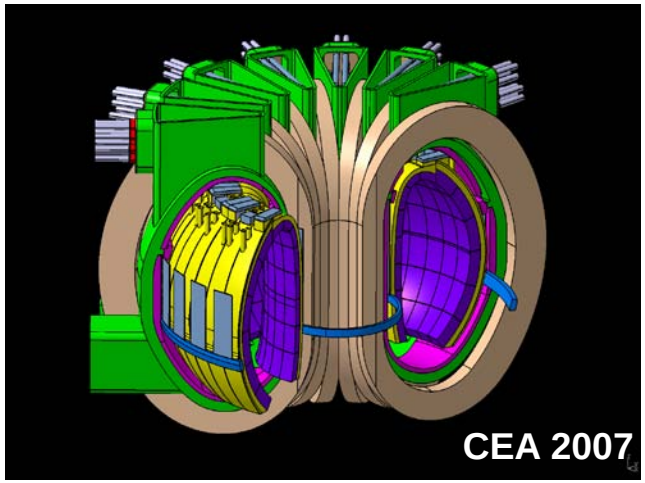

Multi Module Segment – Design Proposals

KIT Design

- MMSs are attached to the High Temperature Shield (called Hot Ring Shield - HRS) by bolts and shear keys.
- The HRS is a closed self sustaining structure that compensates the EM moments due to plasma disruptions.
- The HRS is hung to the Vacuum Vessel by Bending Bars that compensate the differential thermal expansion.
- The Vacuum Vessel holds the vertical loads.

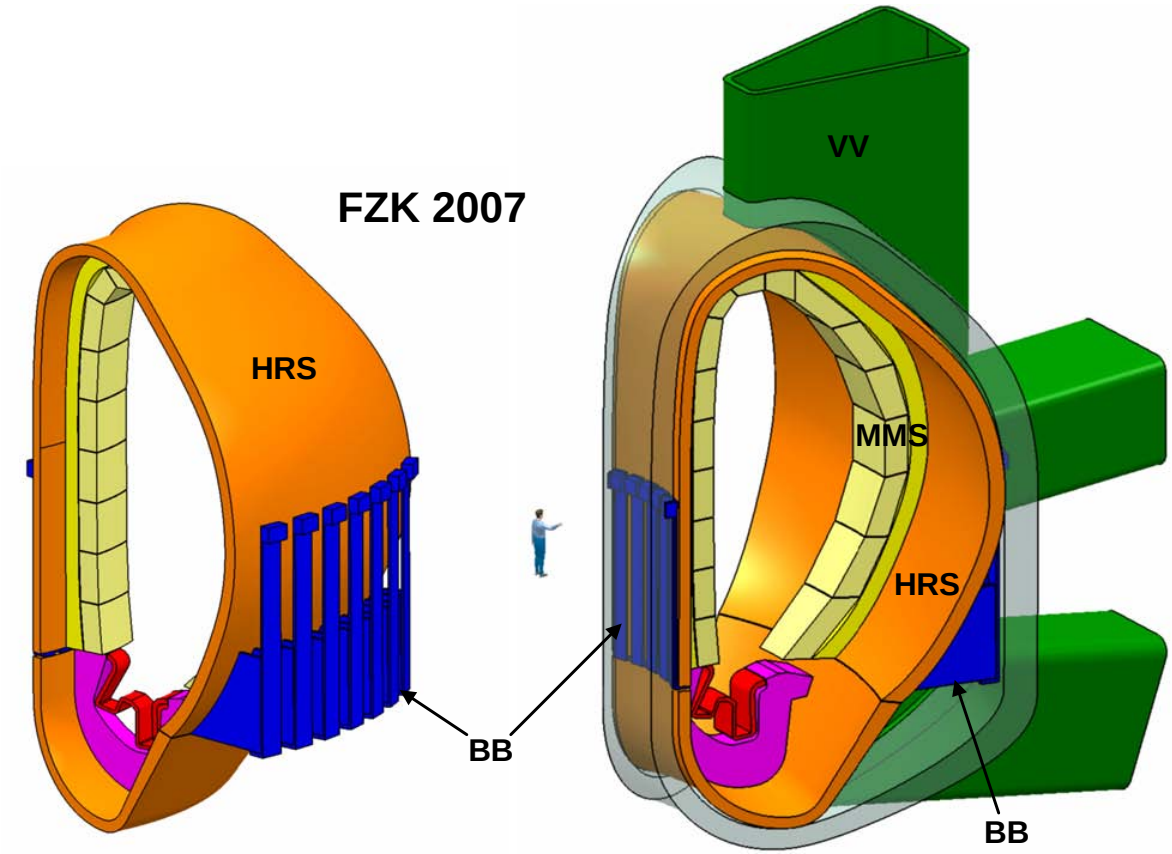

DEMO Sector - [TW6-TRP-007-D1]

Multi Module Segment – Design Proposals

CEA Design

- MMSs are attached to Low Temperature Shield by Bending Bars reinforced with Toroidal Middle Rings to compensate the differential thermal expansion.
- To cope with the EM moments due to plasma disruptions the MMSs need to be fixed together, at least in blocks of 3 outboard and 2 inboard. Bolts between MMS and shear keys at the top.
- The Shield/Vacuum Vessel holds the vertical loads.

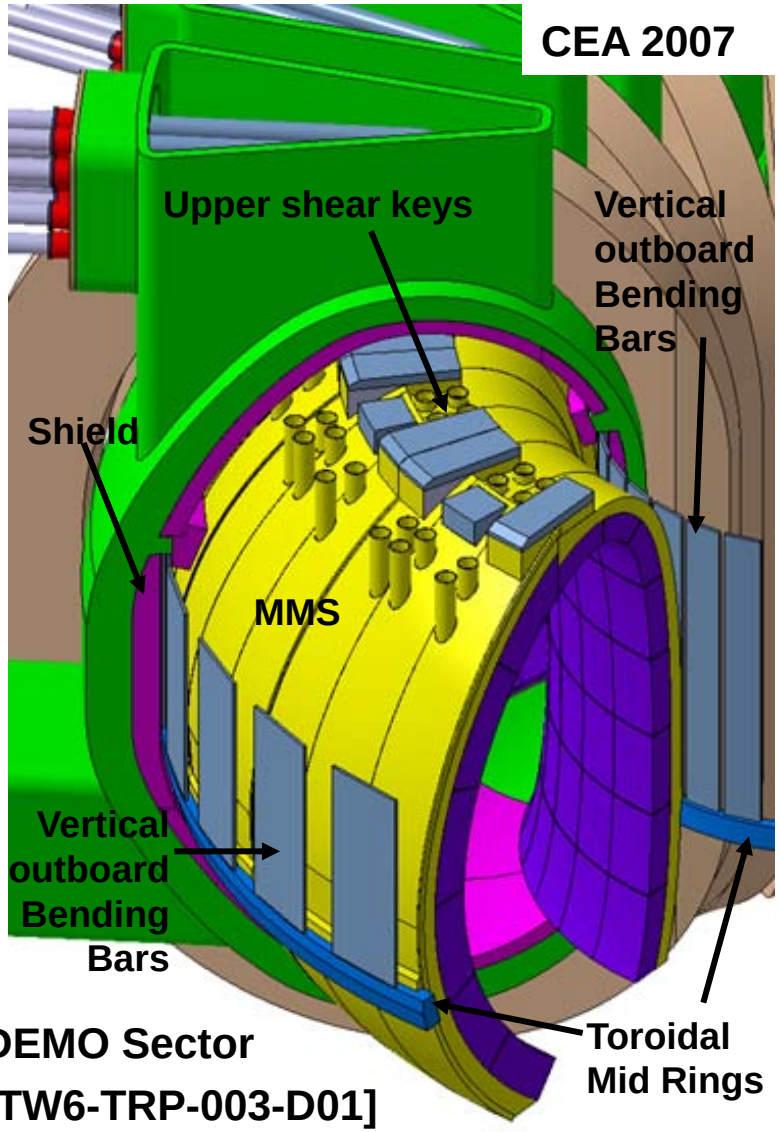

DEMO Sector [TW6-TRP-003-D01]

Multi Module Segment – Design Proposals

EFET Variant Design

- MMSs are attached to Low temperature Shield (like in CEA design) by inclined Bending Bars and Toroidal Lower Rings. An Upper Ring with shear keys locks together the upper ends of the MMS.

- In addition a jacking/hold-down system resists to the vertical upward loads and allow the thermal vertical expansion.

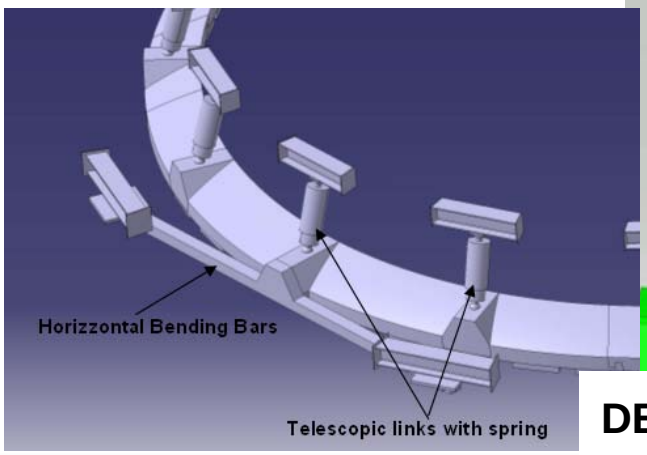

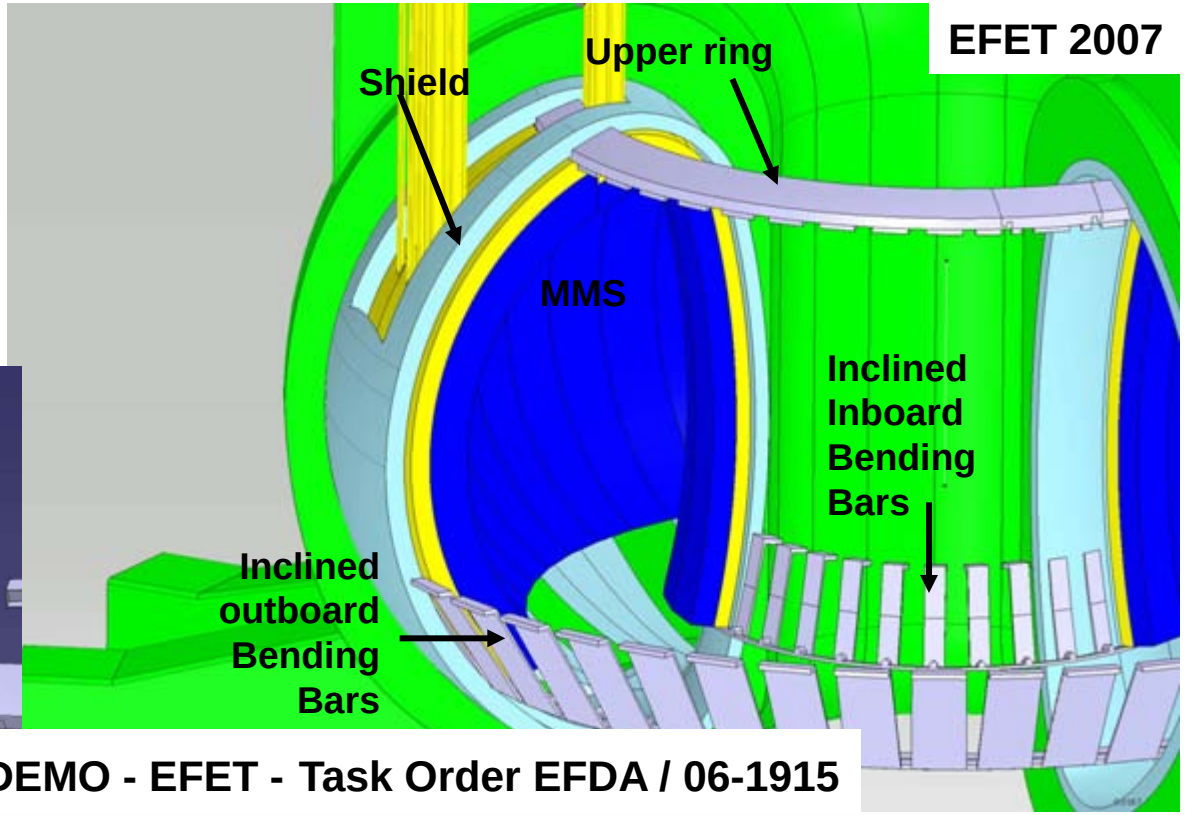

4

Multi Module Segment

Open Issues

Multi Module Segment – Open Issues

Impact of Heat & Current Drive (H&CD) Systems integration on MMS

- Small ports (e.g. 1.5 m) can be included between two MMS.
- Large ports (e.g. 3 m) one MMS has necessarily to be cut and two shorter MMS units have to be designed. [TW6-TRP-007-D3]

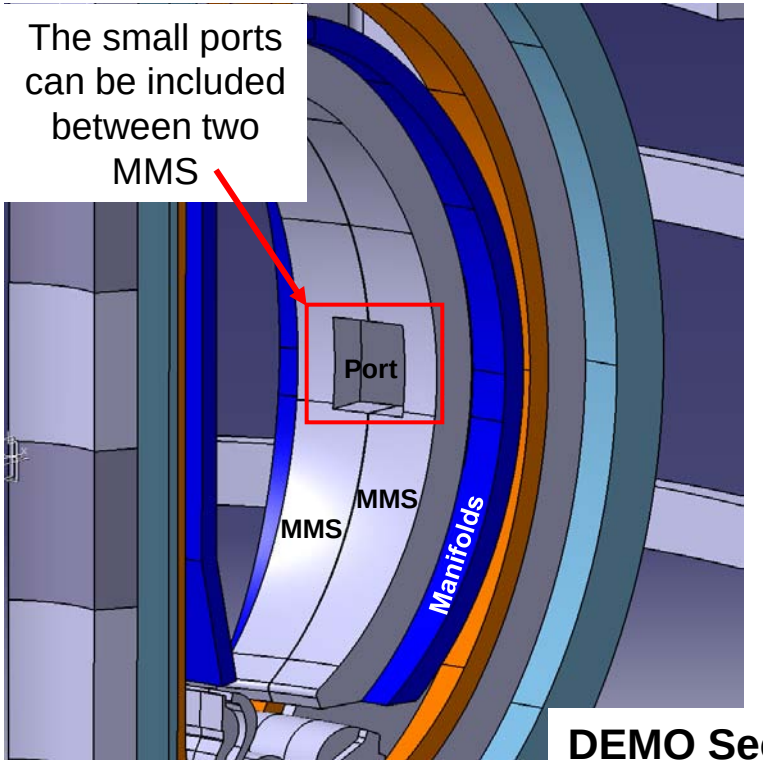

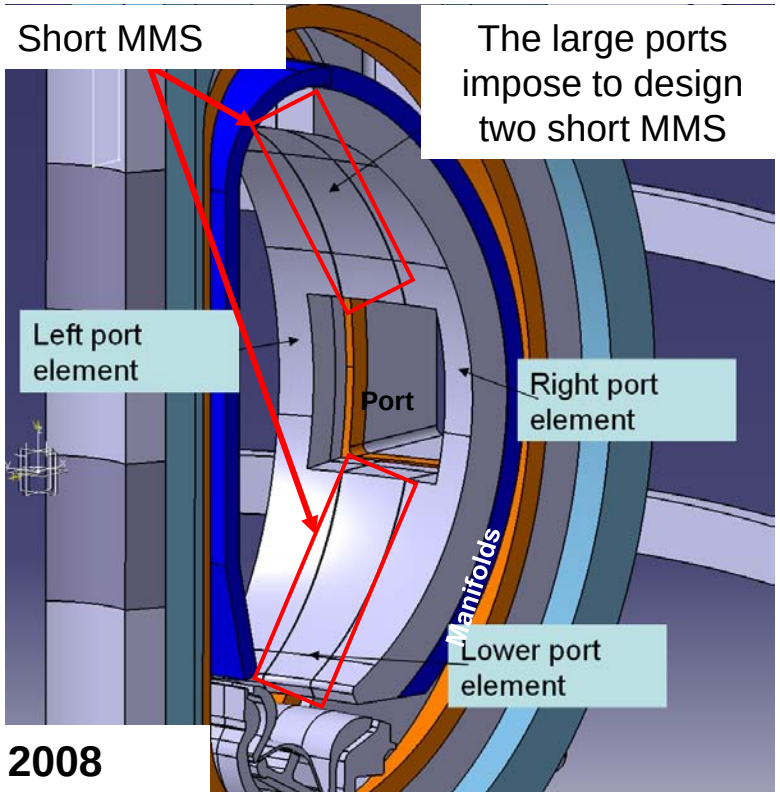

DEMO Sectors - FZK 2008

Multi Module Segment – Open issues

Impact of short MMS on Pipes Routing

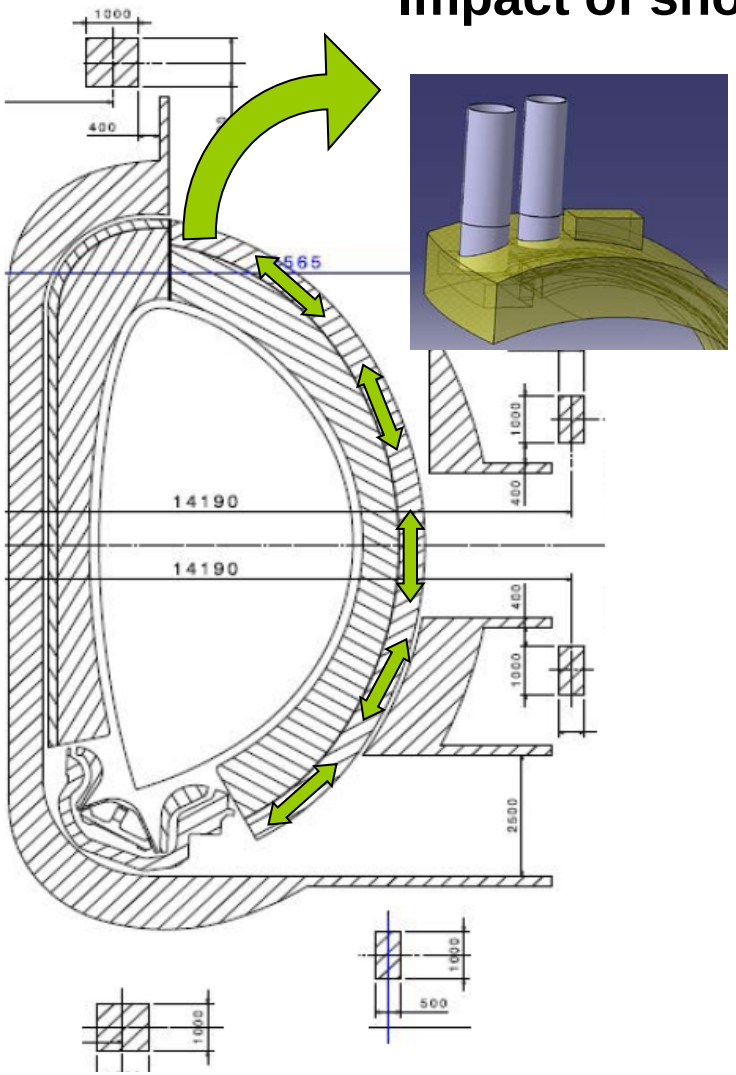

Pipe routing for normal MMS

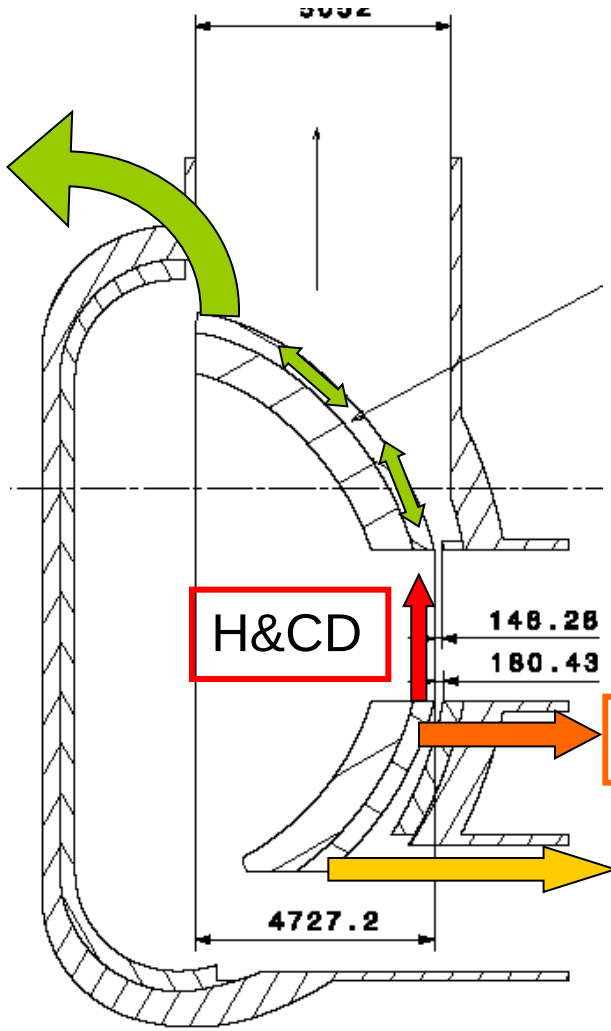

Pipe routing for short MMS

The pipes routing for the cooling system has to be modified in correspondence of the short MMS

H&CD

Poloidal Field Coils

Possibility to be studied

Multi Module Segment – Open issues

Open issues that may lead to the selection of the most promising concept

The systems proposed to support the MMSs present advantages and disadvantages.

Low-T Shield

- Cooling requirements for Bending Bars before the shield
- Capability of the attachments system for the "Separate Support System" to hold the vertical forces (Dynamic Loads due to disruptions or VDE)
- Fixing devices suitable to cope with swelling, creep, embrittlement.

High-T Shield

- Assembling of a closed High-T shield: remote handling & fixing devices
- Possibility of a segmented High-T shield

Conclusions

- Multi Module Segment concept seems to be the most attractive option for blanket integration in DEMO.
- Helium Cooled Pebble Bed (HCPB) & Helium Cooled Lithium Lead (HCLL) are two valid alternatives of breeding blanket, the integration concepts described are not strictly related to one of these blanket concepts.
- The Bending Bars system seems also promising, only the location (before or after the shield) remains an open issue.
- The detailed design of joining devices remains incomplete due to the lack of data concerning neutron irradiation, EM loadings, and temperature fields in the regions of interest.
- Additional investigations are required to clarify the open issues and to converge to a reference design concept.

Thank you for your attention!