US/Japan Workshop on Fusion Power Plant and Related Advanced Technologies
16 - 18 March 2009, The University of Tokyo in Kashiwa, JAPAN

Comparison of the water cooled blanket concepts based on Li_2TiO_3 and $Li_{17}Pb$ breeder for FALCON-D

Youji Someya*, Tetsuo Matsumoto
Musashi Institute of Technolog
Ryoji Hiwatari, Kunihiko Okano, Yoshiyuki Asaoka
Central Research Institute of Electric Power Industry
Takuya Goto
National Institute for Fusion Science
Yuichi Ogawa
The University of Tokyo,

Introduction

- A Fast ignition Advanced Laser fusion reactor CONcept with a Dry first-wall and a high repetition laser (FALCON-D) has been proposed to investigate the potential of the fast ignition in the reactor concepts.

	FALCON-D
Laser	Low power (0.4MJ) High repetition (30 Hz)
Chamber	Dry wall
Blanket breeder	Liquid or solid
Fusion power	Low electric power (e.g., Pe ~ 0.4 GWe)

Decide between the two types of the blanket

Objectives

For the blanket system of FALCON-D, two blanket concepts of a solid and a liquid metal breeder types using the reduced activation ferritic steel (F82H) has been proposed.

- Water cooled solid breeder blanket (WCSB)
  : Li_2TiO_3 / F82H / Be / Water
- water cooled liquid metal breeder blanket (WCLL)
  : $Li_{17}Pb_{83}$ / F82H / Water

The two blanket concepts for FALCON-D are compared, and the characteristics of those blanket systems for FALCON-D are made clear.

Motivation

- **The following characteristics of the ICF mitigate the design condition for the ICF blanket system in comparison with MCF.**

  1. **High blanket coverage (~90%).**
  2. **No MHD pressure drop for liquid metal coolant**
  3. **A large accommodation space for blanket**

- Preferable to tritium self-sufficiency and maintenance for FALCON-D

Choice of the cooling systems

- Because of the Low electric power of FALCON-D, we has ruled out a self-cooled liquid metal blanket, because the pumping power of the liquid metal has been extremely large and results in unacceptable re-circulating power in the plant.
- Water was adopted for the coolant in the blanket system, because of a good compatibility with structural material, plenty of databases and experience in nuclear power plant.

FALCON-D CONCEPT

- We can find that the design point of the target gain 100 is achievable with the injection energy of 0.4MJ under a condition of $\alpha = 2$, η_c=5%, η_h=20%

- The minimum fusion pulse energy with acceptable target gain is about 40MJ.
- Then a fusion power 1200MW can be obtained with a high repetition laser of 30 Hz.
- In this case, we can design the dry wall chamber with R =5.64m, if pulse heat load limit of 2J/cm^2 is allowed.

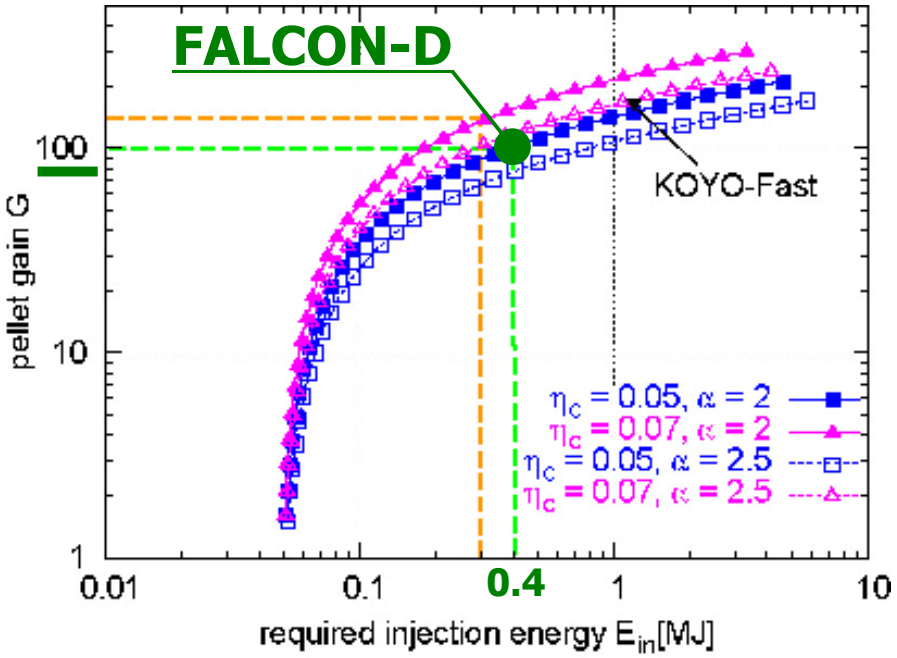

Fig. Gain curve for various implosion parameters Calculated with a simple point model

Ref. T.Goto et al., Design Study of Dry Wall Fast Ignition Laser Fusion Reactor with High Repetition Laser, Fusion Science and Technology, Vol.52, Number 4 (2007) 953-957.

Elevation view of the FALCON-D

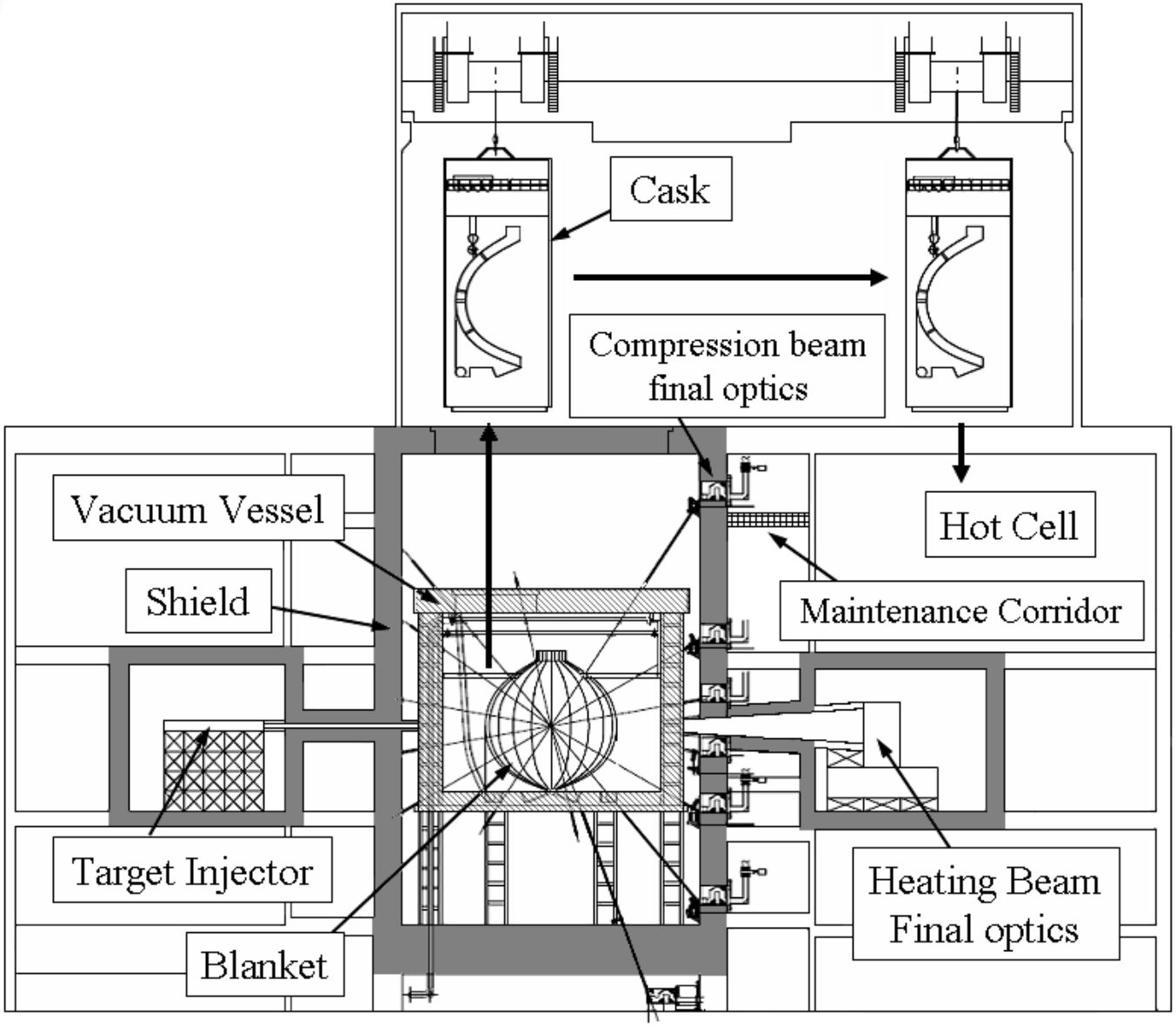

Elevation view of the FALCON-D

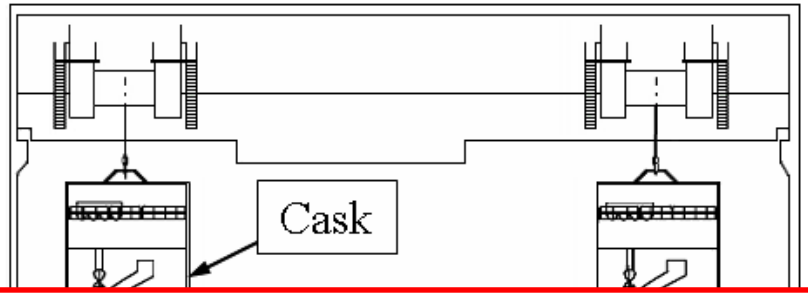

The blanket systems are divided into 10 sectors in the vacuum vessel.

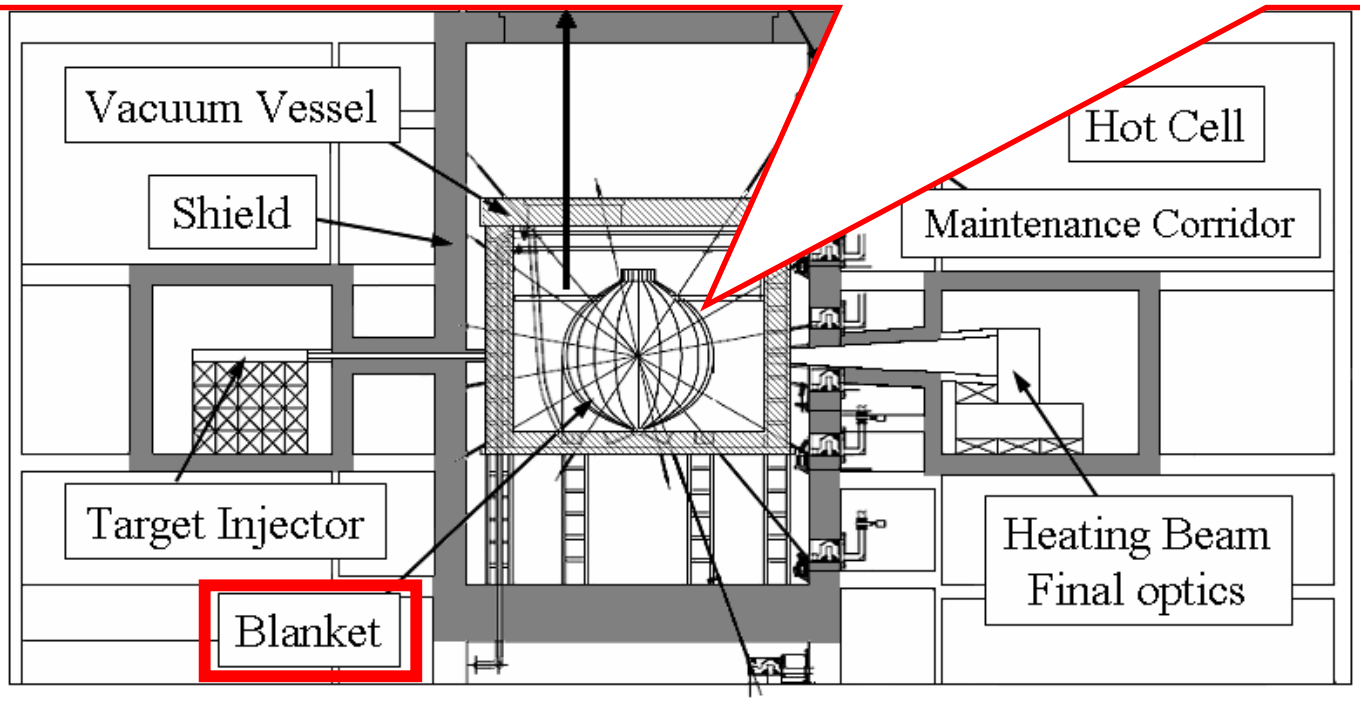

Elevation view of the FALCON-D

This VV also serves as the first tritium boundary.

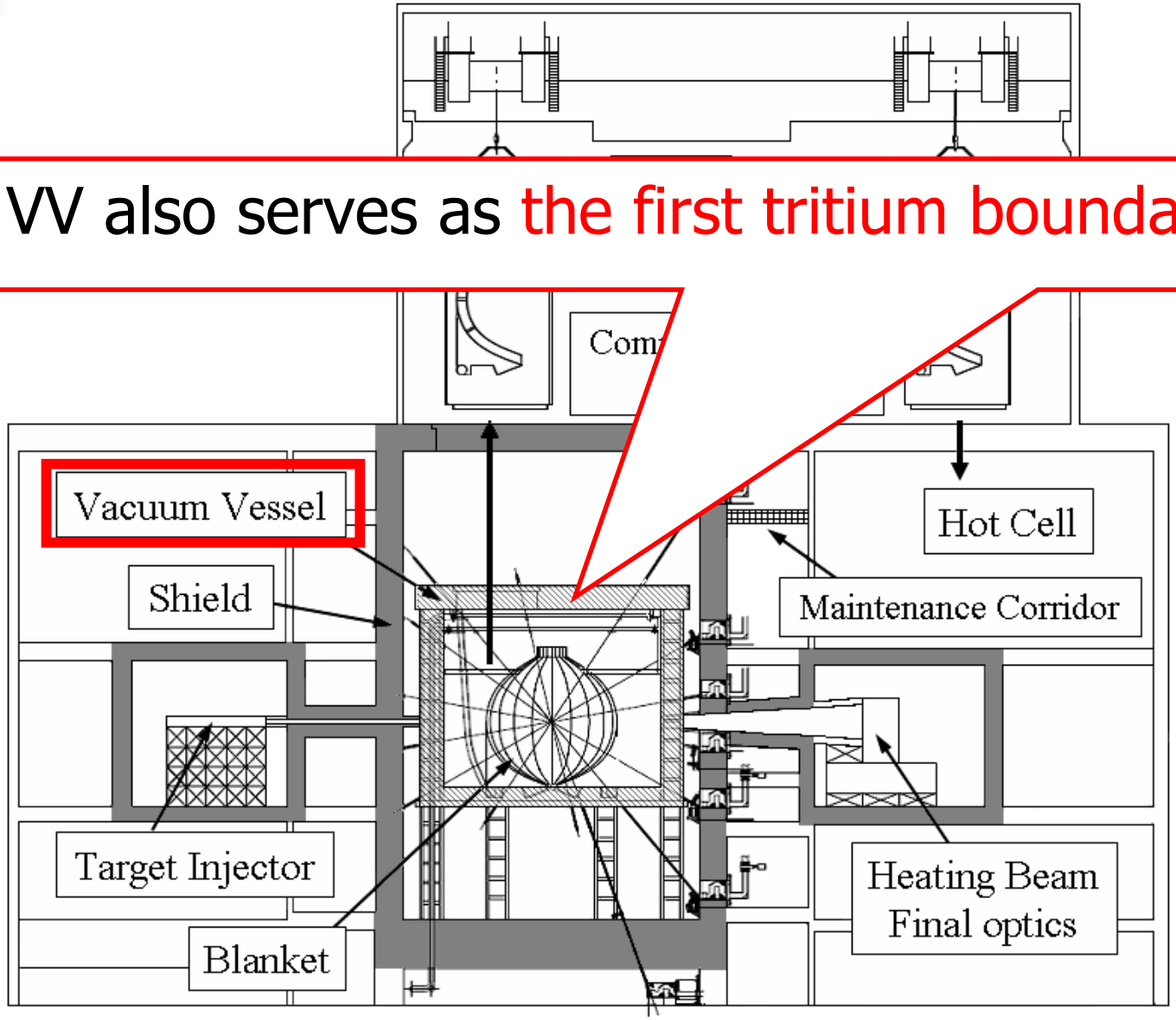

Elevation view of the FALCON-D

The 31 compression beam lines, the heating beam line and the target injector go through the gap between the blanket sectors.

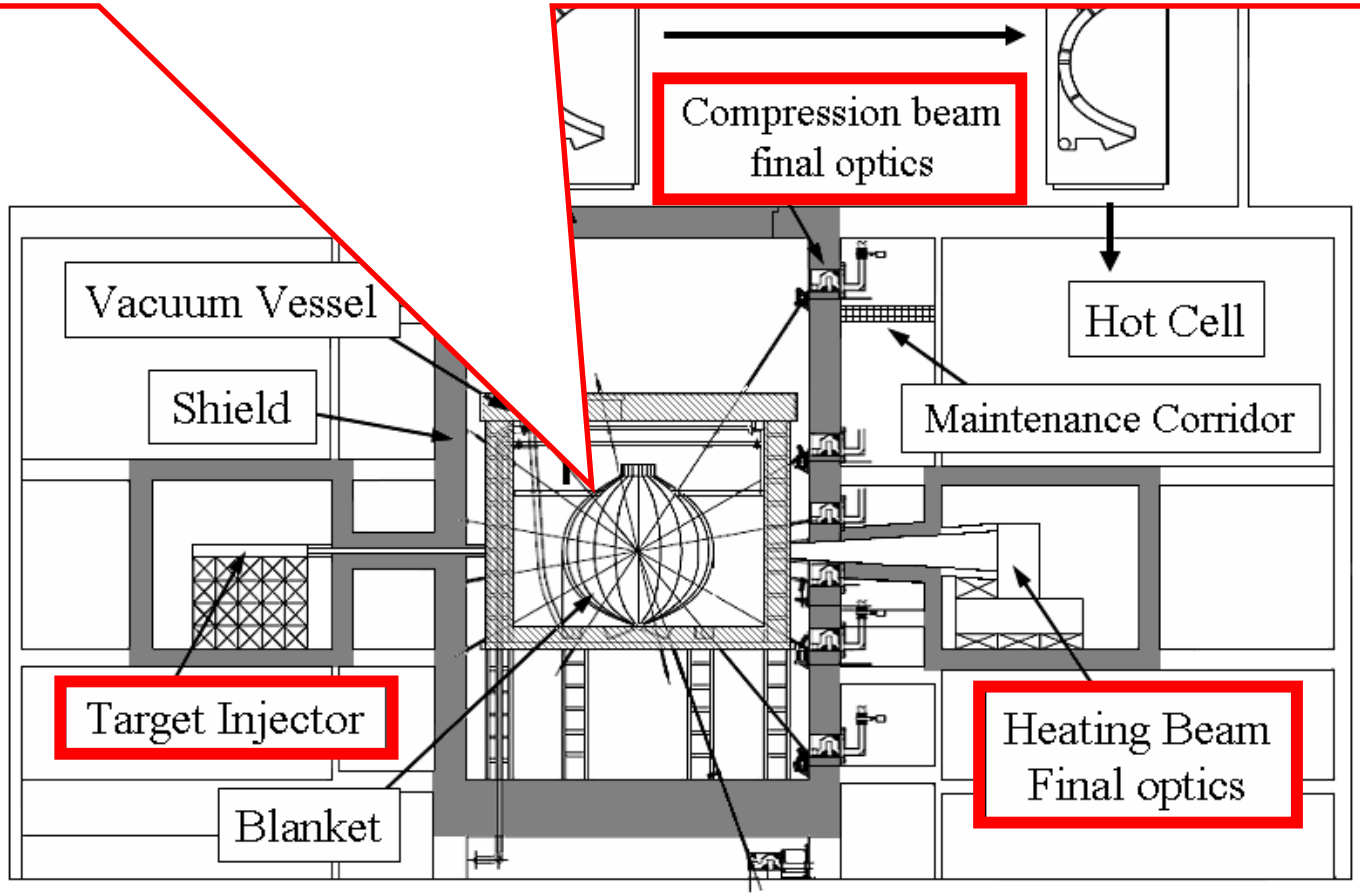

- In the case of FALCON-D, most of reactor core components except the final optics system of the heating beam are placed in the reactor room.
- Therefore, the reactor room wall serves as the radiation shielding.

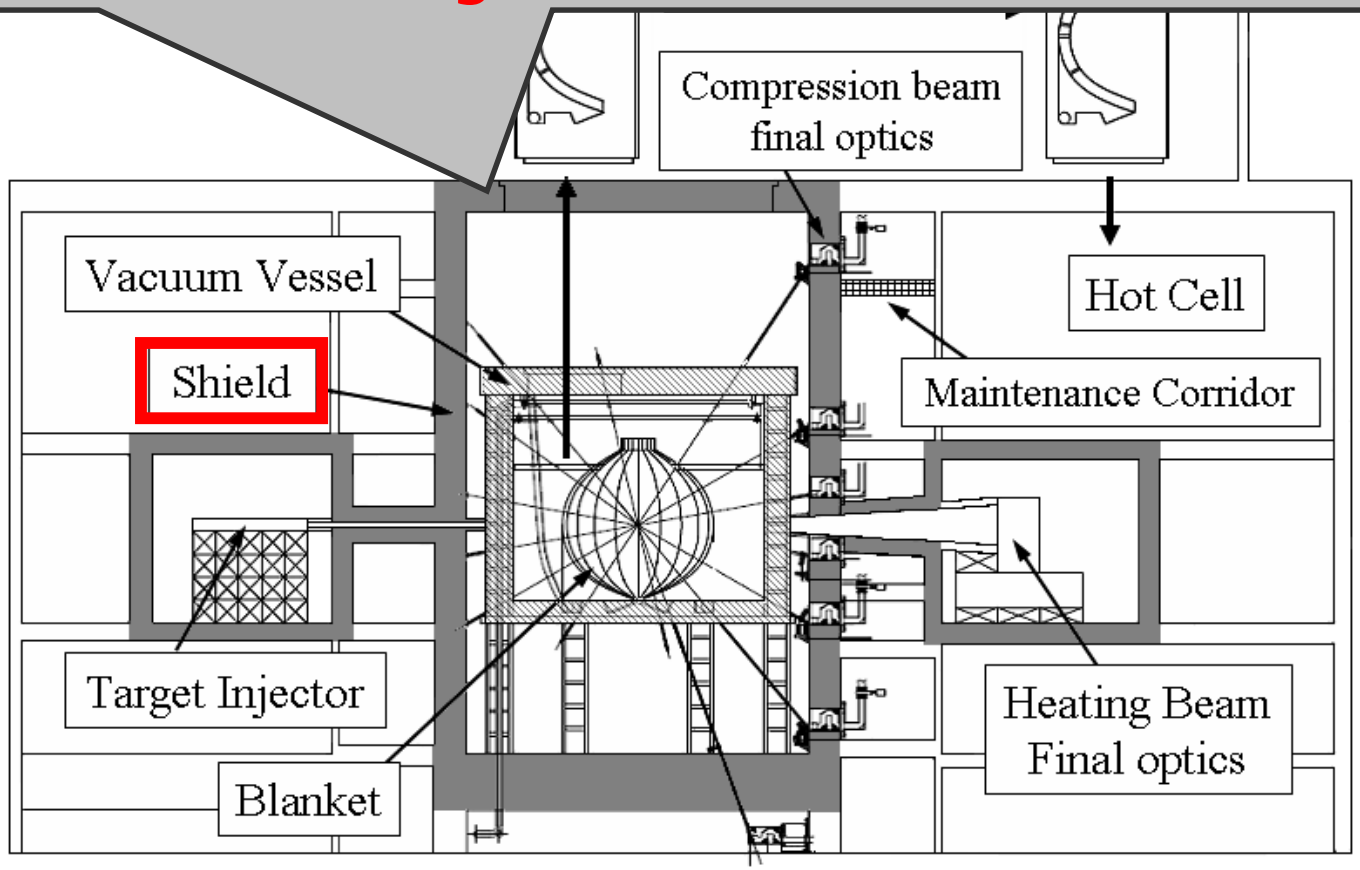

Elevation view of the FALCON-D

- In order to improve the plant availability, the large sector removal method for blanket maintenance has been adopted.

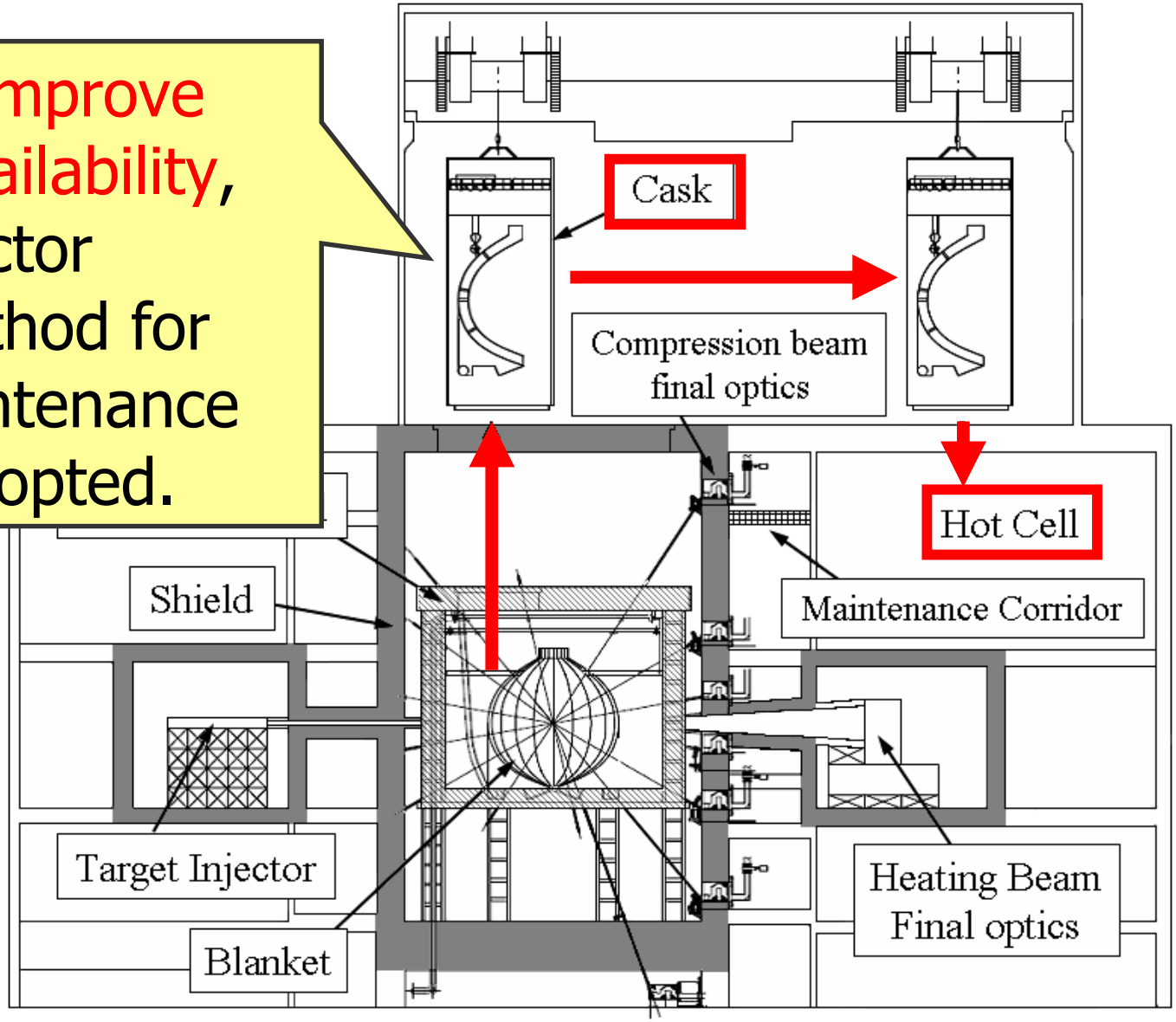

Blanket Design Concepts

- **For the feasibility of the FALCON-D, the important factors are as follows:**

1. Tritium Breeding Ratio (TBR)

Taking accounts of minimum margin of tritium for a stable operation of the fusion power plants, the requirement of net TBR has been estimated to be approximately **1.07** for the first generation of fusion commercial plants.

2. The weight of the blanket

The lighter weight of the blanket sector, the more preferable to improve the maintainability. In addition, this lower weight leads to less cost for the cask and its transfer system such as the crane.

Ref. ASAOKA, Y. et al., "Requirement of tritium breeding ratio for early fusion power reactors," Fusion Technology, 30 (1996) 853-863.

Design of the Blanket system

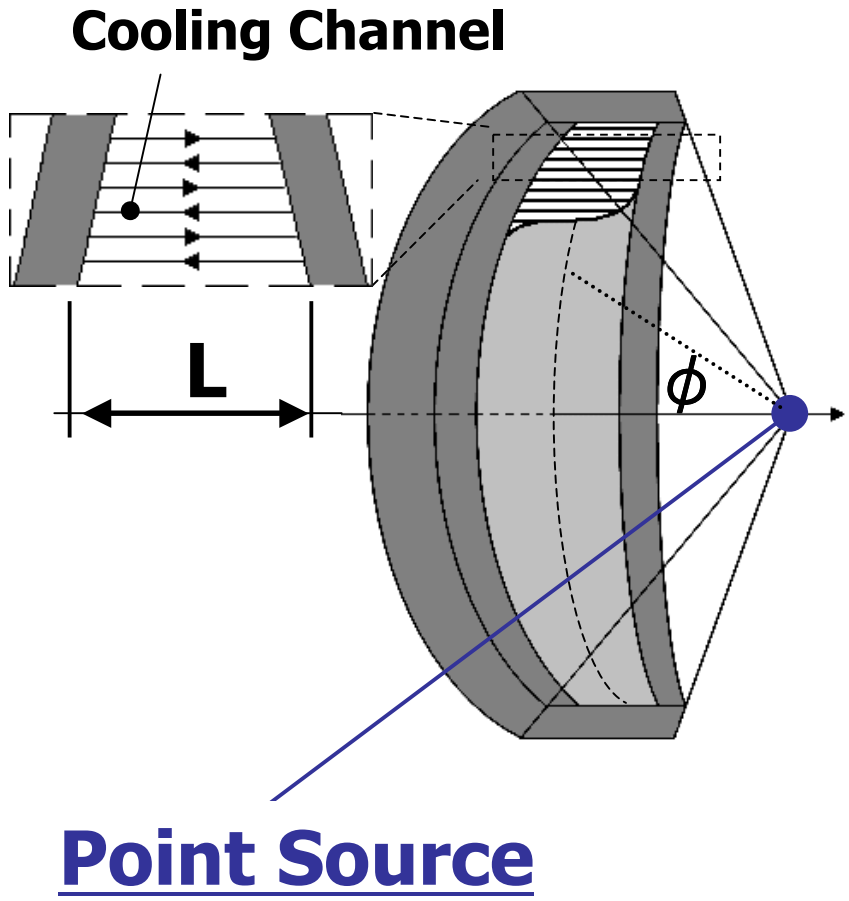

FIG. Schematic structure of the cooling plumbing for the FALCON-D blanket system.

〈Condition〉

- Target Yield : 40 [MJ]
- Repetition Rate : 30 [Hz]
- Fusion power : 1200 [MW]
- Neutron wall load : 2.401 [MW/m^2]
- Heat wall load : 0.561 [MW/m^2]

〈Configuration〉

- FW protection layer : Tungsten (1mm)
- The plant thermal efficiency : 34 %
- The coolant pressure : 15 MPa
- The total coverage of the breeding blanket more than 90 % is possible.

Design of the Blanket system

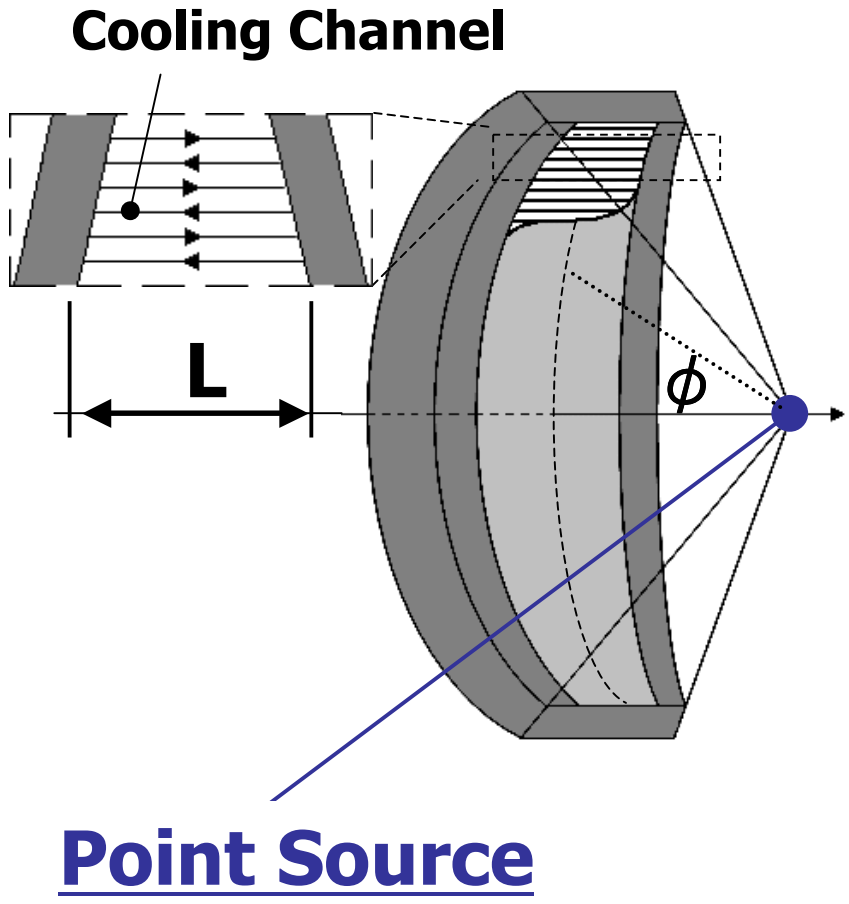

FIG. Schematic structure of the cooling plumbing for the FALCON-D blanket system.

- Those channels are connected to the headers, which are located along the side plate of the blanket sector.
- The distance (L) of the cooling channel decrease with increase of the angle of elevation (ϕ).
- To keep the constant temperature along the longitude line on the blanket surface, the coolant velocity is controlled by changing the cross section of the cooling channel.

Water Cooled Solid Breeder Blanket (WCSB)

< Constitution >

- Solid breeding material : Li_2TiO_3(peb.)
  → 90 % ^{6}Li enrichment
- Neutron multiplier : Be (peb.)
- Structure material : F82H
- Coolant : H_2O

<Neutronics Analysis>

- The local TBR was estimated at 1.20, and the blanket thickness and weight per sector were 0.37 m and 39 ton, respectively.

- After a period of 3 Full Power Years (FPY), the decrease of the local TBR caused by the ^{6}Li burn-up is about 0.3 %. Consequently, assuming a blanket coverage ratio of 90 %, a net TBR greater than 1.07 is kept during 3 FPY.

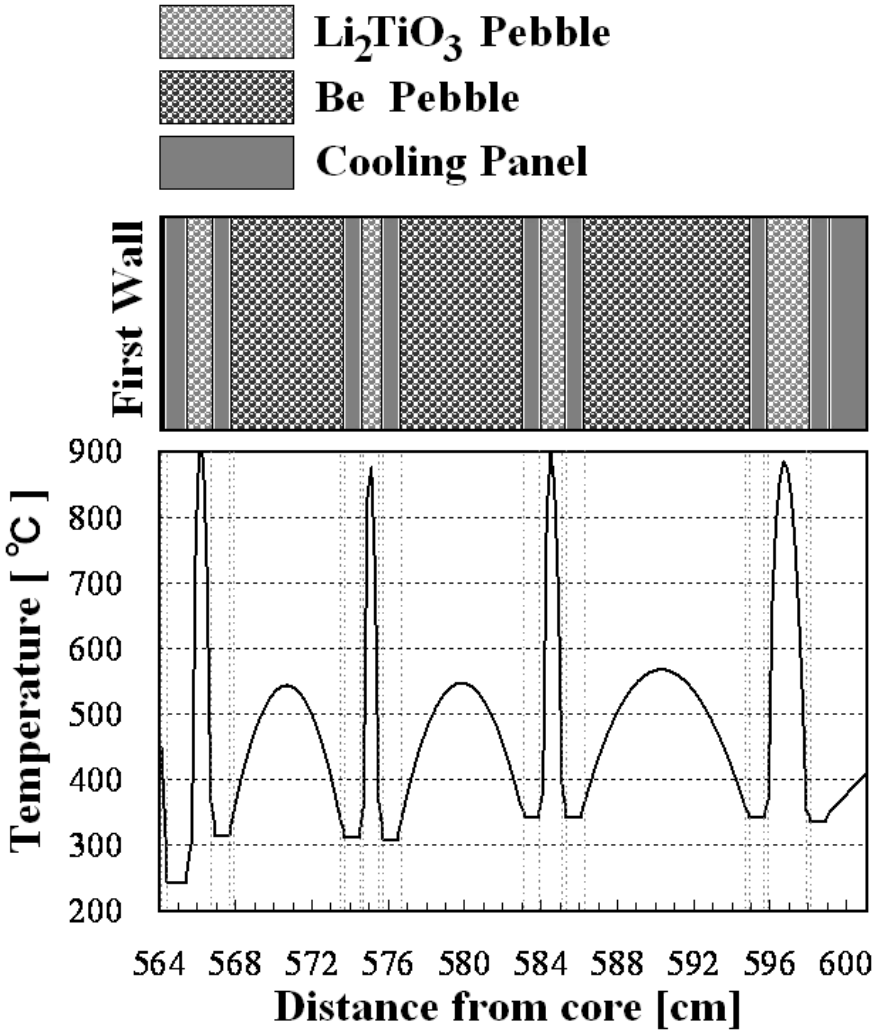

FIG. Horizontal cross-section and temperature distribution of the solid breeder blanket

Water Cooled Solid Breeder Blanket (WCSB)

<1D-Thermal Analysis>

- The upper limit of the temperatures
  - Li_2TiO_3 : 900 ℃
  - Be : 600 ℃
  - F82H : 550 ℃
- The lower limit of the structural material temperature is the DBTT, 170 ℃.
- The total pressure loss : 1.3 MPa
- The pumping power : 8.2 MW

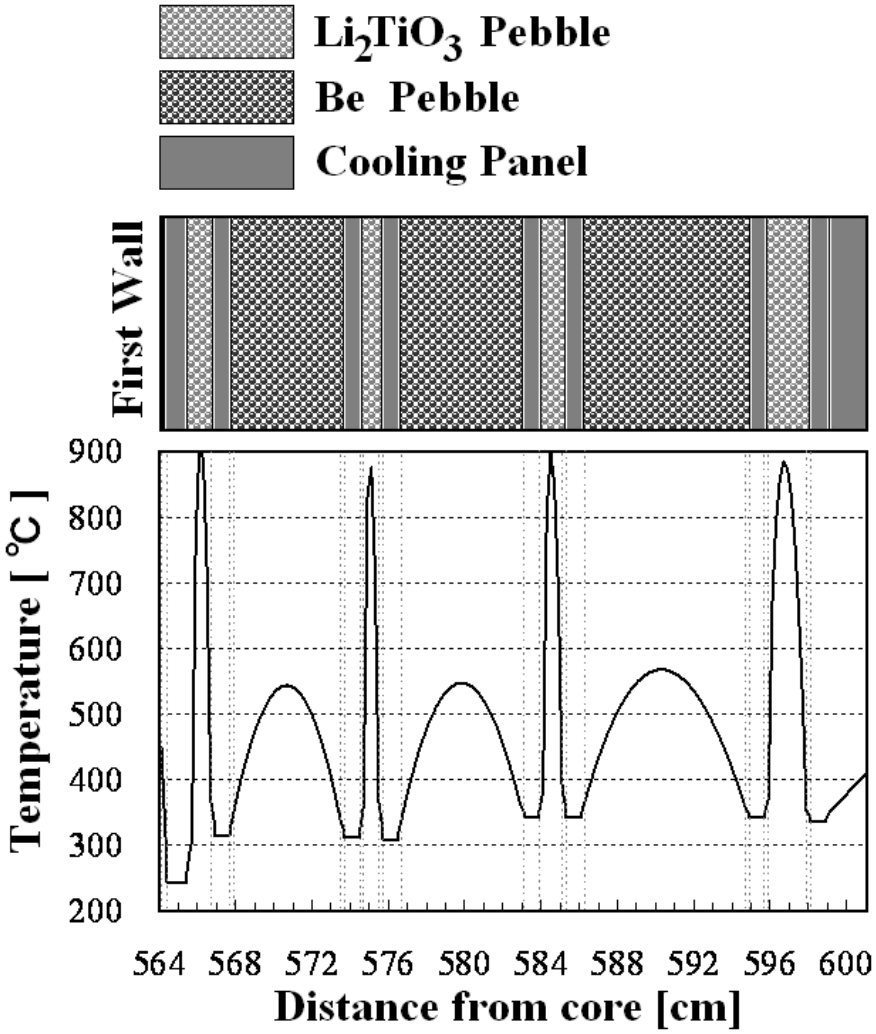

FIG. Horizontal cross-section and temperature distribution of the solid breeder blanket

Water Cooled Liquid Metal breeder Blanket (WCLL)

< Constitution >

- Liquid metal breeder : $Li_{17}Pb_{83}$
  → 90 % ^{6}Li enrichment
- Structure material : F82H
- Coolant : H_2O

<Neutronics Analysis>

•The achievable local TBR was 1.21. This value is sufficient considering relatively high blanket coverage (90%).

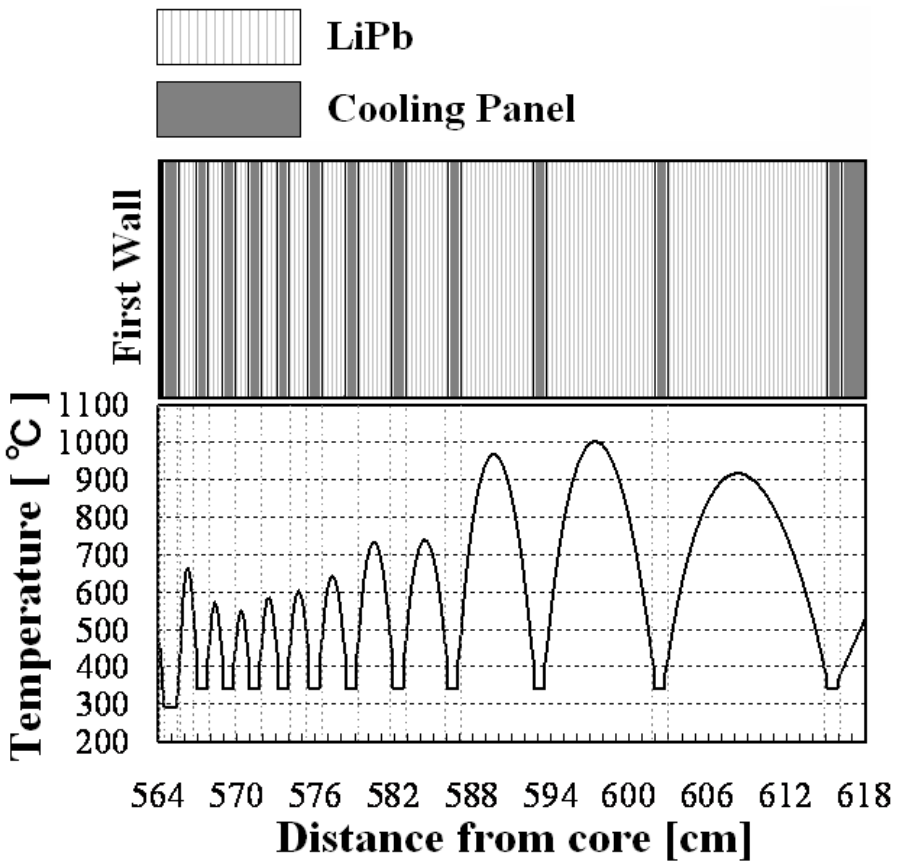

FIG. Horizontal cross-section and temperature distribution of the liquid metal breeder blanket

Water Cooled Liquid Metal breeder Blanket (WCLL)

＜1D-Thermal Analysis＞

- The lower limit of the temperature is 250 ℃ in consideration of the melting point of the $Li_{17}Pb_{83}$, 243 ℃.
- The upper limit of the temperature for the structure material and the liquid metal is 480 ℃ to prevent structure corrosion with $Li_{17}Pb_{83}$.
- The total pressure loss : 5.5 MPa
- The pumping power : 66 MW

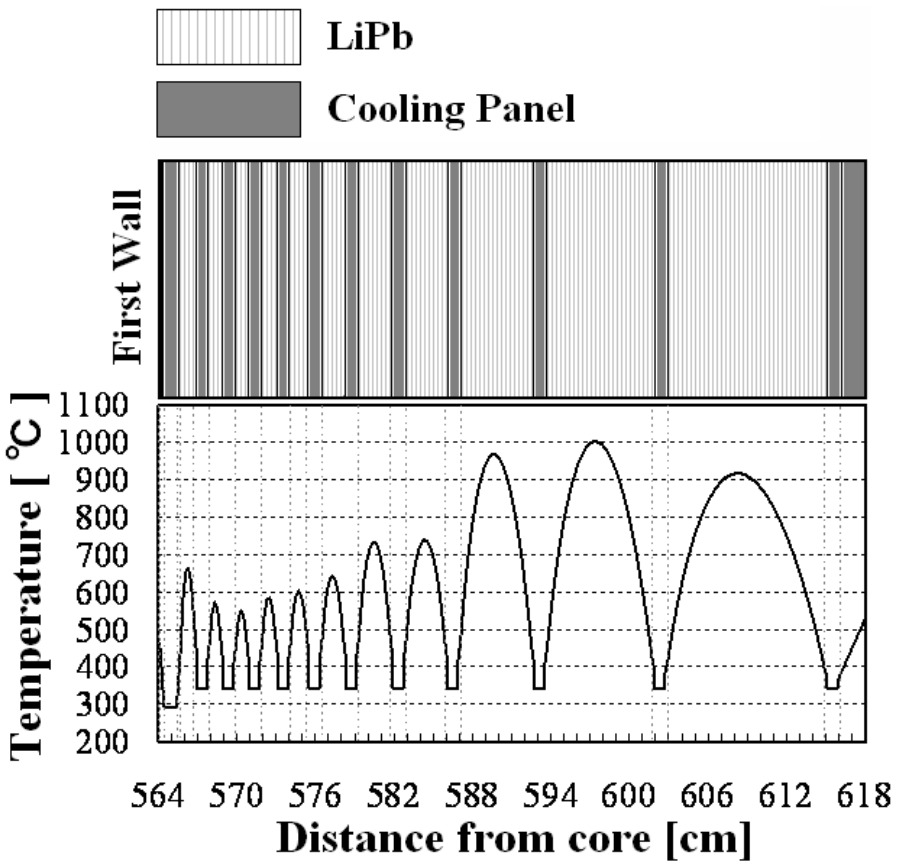

FIG. Horizontal cross-section and temperature distribution of the liquid metal breeder blanket

Comparison of two types of blanket for FALCON-D

		WCSB	WCLL
Net TBR		1.08	1.09
Thickness	m	0.37	0.54
Weight	ton /sector	39	152 (29 w/o LiPb)
Amount of Be	ton /sector	12	
Neutron Energy multiplication in blanket		1.32	1.16
Plant thermal output	MWth	1507	1354
Gross electric power	MWe	512	460
Pressure drop	MPa	1.3	5.5
Pumping power	MW	8.2	66
Recirculation power for laser drive	MW	154	
Net electric power	MWe	350	240

Comparison of two types of blanket for FALCON-D

		WCSB	WCLL
Net TBR		1.08	1.09
Thickness	m	0.37	0.54
Weight	ton /sector		152 (29 w/o LiPb)
Amount of Be			
Neutron Energy multiplication in blanket		1.32	1.16
Plant thermal output	MWth	1507	1354
Gross electric power	MWe	512	460
Pressure drop	MPa	1.3	5.5
Pumping power	MW	8.2	66
Recirculation power for laser drive	MW	154	
Net electric power	MWe	350	240

The net TBR 1.09 is achieved without the neutron multiplier Be.

Comparison of two types of blanket for FALCON-D

		WCSB	WCLL
Net TBR		1.08	1.09
Thickness	m	0.37	0.54
Weight	ton /sector	39	152 (29 w/o LiPb)
Amount of Be	ton /sector	12	
Neutron Energy multiplication in blanket			1.16
Plan ther			
Gro			
Pres			
Pun			
Rec			
Net electric power	MWe	350	240

The thickness and the weight of the WCLL blanket are larger than that of the WCSB blanket. However, the weight of the WCLL blanket during the maintenance period can be reduced to 29 tons by exhausting the liquid metal breeder.

Both blanket concepts is light enough to apply the maintenance method with a large cask.

Comparison of two types of blanket for FALCON-D

		WCSB	WCLL
Net TBR		1.08	1.09
Thickness	m	0.37	0.54
Weight	ton /sector	39	152 (29 w/o LiPb)
Am			
Neu in b			
Pla thermal output			
Gross electric power	MWe	[illegible]	460
Pressure drop	MPa	1.3	5.5
Pumping power	MW	8.2	66
Recirculation power for laser drive	MW	154	
Net electric power	MWe	350	240

- The pumping power of the WCLL blanket system is about 58 MW larger than that of the WCSB blanket, because the operational window of temperatures for a stainless steel/$Li_{17}Pb_{83}$ blanket system is restricted to be narrow.

Comparison of two types of blanket for FALCON-D

		WCSB	WCLL
Net TBR		1.08	1.09
Thi			
We			(29 w/o Li b)
Amount of Be	ton /sector	12	
Neutron Energy multiplication in blanket		1.32	1.16
Plant thermal output	MWth	1507	1354
Gross electric power	MWe	512	460
Pressure drop	MPa	1.3	5.5
Pumping power	**MW**	**8.2**	**66**
Recirculation power for laser drive	MW	154	
Net electric power	MWe	350	240

The net electric power of the WCSB blanket system is 110 MW larger than that of the WCLL blanket system, because of energy multiplication by neutron multiplier Be.

Summary

- For the blanket system of FALCON-D, two blanket concepts of the WCSB and WCLL blanket system using the reduced activation ferritic steel (F82H) have been proposed.
- The net electric power of the WCSB blanket system is 110 MW larger than that of the WCLL blanket system.
- Hence, the WCSB blanket system is preferable for FALCON-D. If the combination of neutron multiplier Be and water would turn out to be difficult from the viewpoint of the chemical reaction, the WCLL blanket system is another option for FALCON-D.