Recent ARIES Progress on Developing He-Cooled W-Alloy Divertor Concepts

Presented by A. R. Raffray, UCSD

with contributions from

S. Abdel-Khalik, T. Ihli, S. Malang and X. Wang

Japan/US Workshop on Power Plant Studies and Advanced Technologies with Participation of China

University of Tokyo in Kashiwa, Japan

March 16-18, 2009

UC San Diego

He-cooled W-Alloy Divertor Concepts of Different Sizes Have Been Proposed for MFE Power Plant Application

- **Representative designs include:**
  - **Plate configuration (characteristic dimension ~1 m)**
  - **ARIES-CS T-tube configuration (characteristic dimension ~10 cm)**
  - **FZK finger concept (characteristic dimension ~1.5 cm)**

- **Use of smaller-scale units tends to minimize the thermal stress under a given heat load; however, this results in an increase in the number of units, with a corresponding impact on the reliability of the system.**
  - **~750 for the plate concept**
  - **~110,000 for the T-tube concept**
  - **~535,000 for the finger concept**

- **For all designs, W alloy development required to widen operating temp. range and to develop reliable fabrication and joining processes.**
  - **~600-700°C (governed by W ductility considerations) to enable coupling to an ODS ferritic steel manifold**
  - **~1300°C (governed by the W recrystallization limit) to provide desirable high-temperature capability**

ARIES-CS Divertor Design

- **Design for a max. q'' of at least 10 MW/m^2**
  - Limited number of disruptions assumed for power plant
  - Reduces demand on armor lifetime

- **Mid-size configuration with good q'' accommodation potential, reasonably simple (and credible) manufacturing and assembly procedures, and which could be well integrated in a CS or Tokamak reactor design.**
  - "T-tube" configuration (~10 cm)
  - Cooling with discrete or continuous jets

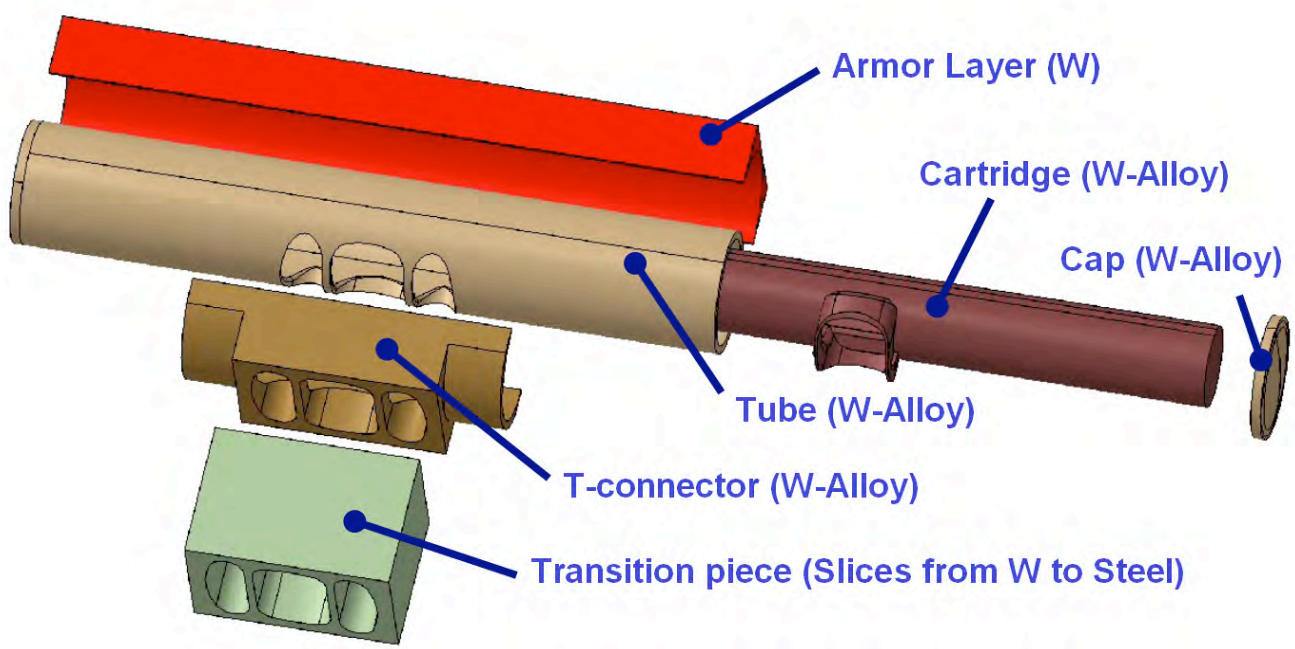

UC San Diego

ARIES T-Tube Divertor Concept

- T-tube: ~15 mm dia. and ~100 mm long.
- Concept consists of a W-alloy inner cartridge and outer tube with a castellated W armor layer on top.

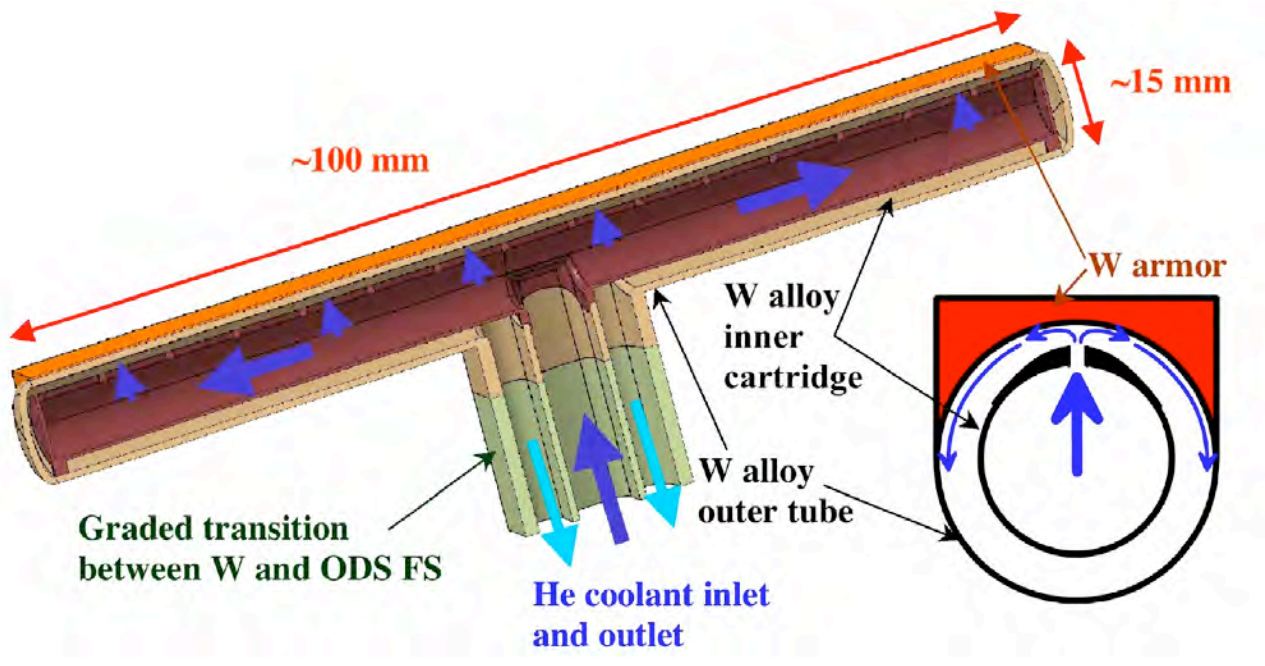

- Both W alloy pieces are connected to a base ODS FS unit through a graded transition to minimize thermal stresses.
- The He coolant is routed through the inner cartridge first and then pushes through thin slots (~0.4 mm) for jet-cooling the heat-loaded outer tube surface.
- The design provides some flexibility in accommodating the divertor area since a variable number of such T-tubes can be connected to a common manifold to form the desired divertor target.

Example Thermo-Fluid Results for T-tube with 5-mm Castellated W Armor

- **Example Case:**
  - Jet slot width=0.4 mm
  - Jet-wall-spacing=1.2 mm
  - Surface heat flux, q''=10 MW/m^2
  - Volumetric heat generation=17.5 MW/m^3
  - He inlet/outlet temperature=600/677 °C
  - He operation pressure=10 MPa

- **CFD Results**
  - Max. Coolant velocity v=230.3 m/s
  - Max. Heat transfer coefficient=3.911 x 10^4 W/m^{2}K
  - ΔP=0.12 MPa
  - Pumping power/Thermal power=5.7%

- **CFD Result Confirmed by T/H Experiments at Georgia Tech.**

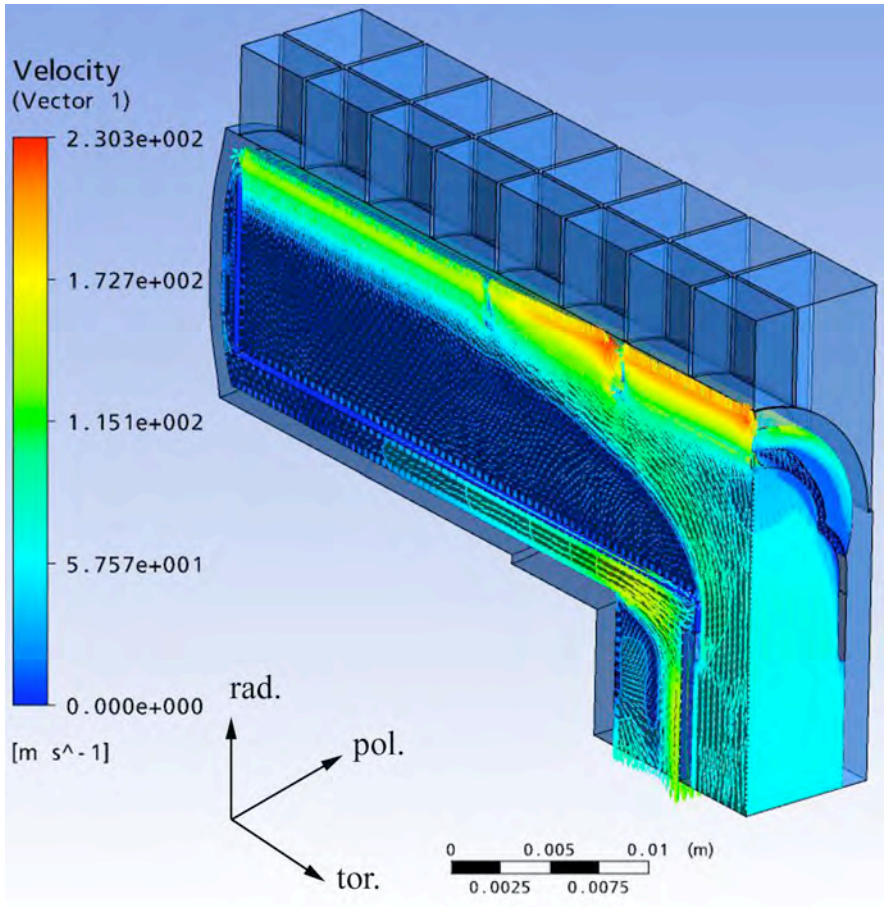

Velocity distributions

UC San Diego

Example Thermo-Mechanical Results for T-tube Concept 5-mm Castellated W Armor

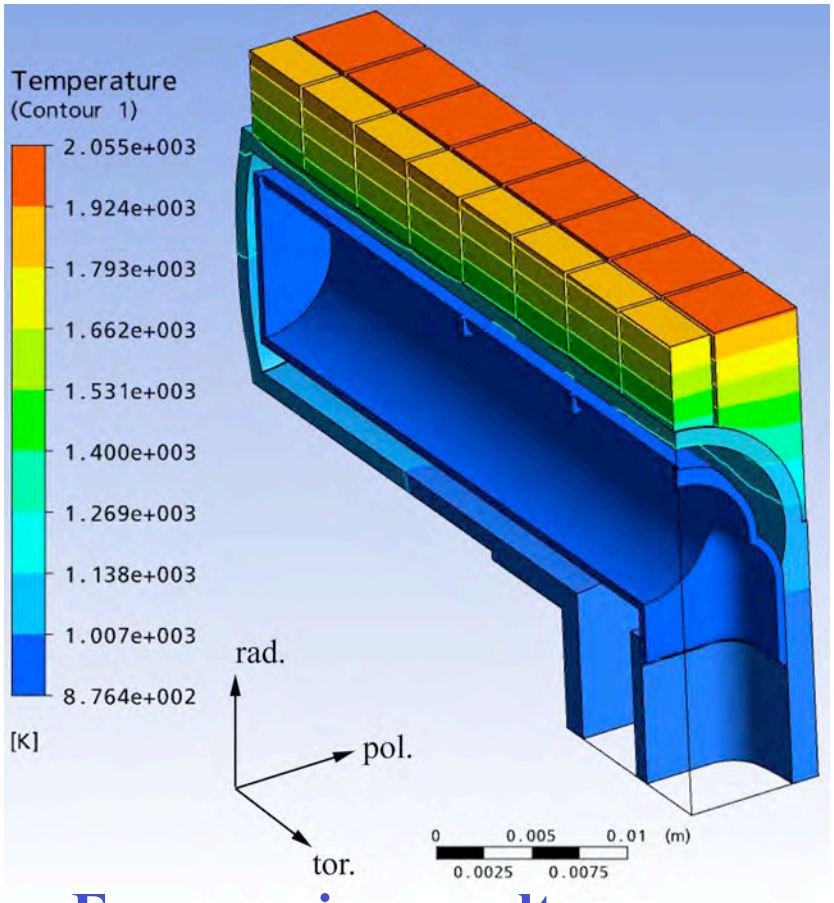

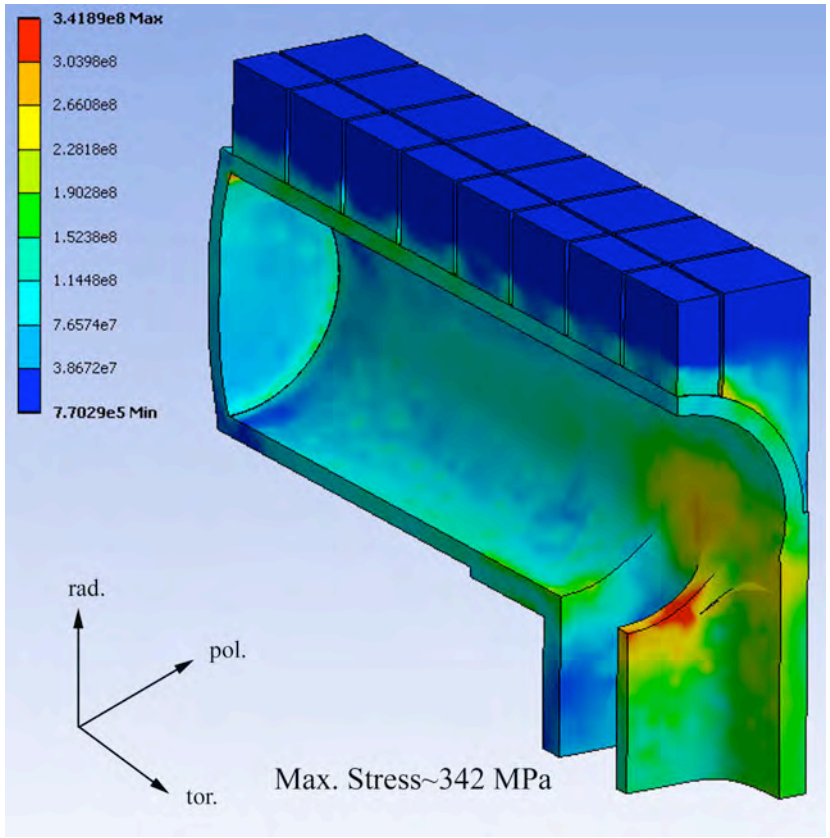

- **Encouraging results:**
  - **Max. W armor temperature=1782 °C**
  - **Max. W structure tube temperature=1240 °C (re-crystallization limit ~1300 °C)**
  - **Max. combined thermal + primary stresses=342 MPa**

UC San Diego

Integration of T-tube Manifold Unit to Form Divertor Plate

- T-tubes assembled in a manifold unit.
- Typical target plate (~1 m x ~1 m) consists of a number of manifold units.
- Flexibility in setting plate size.

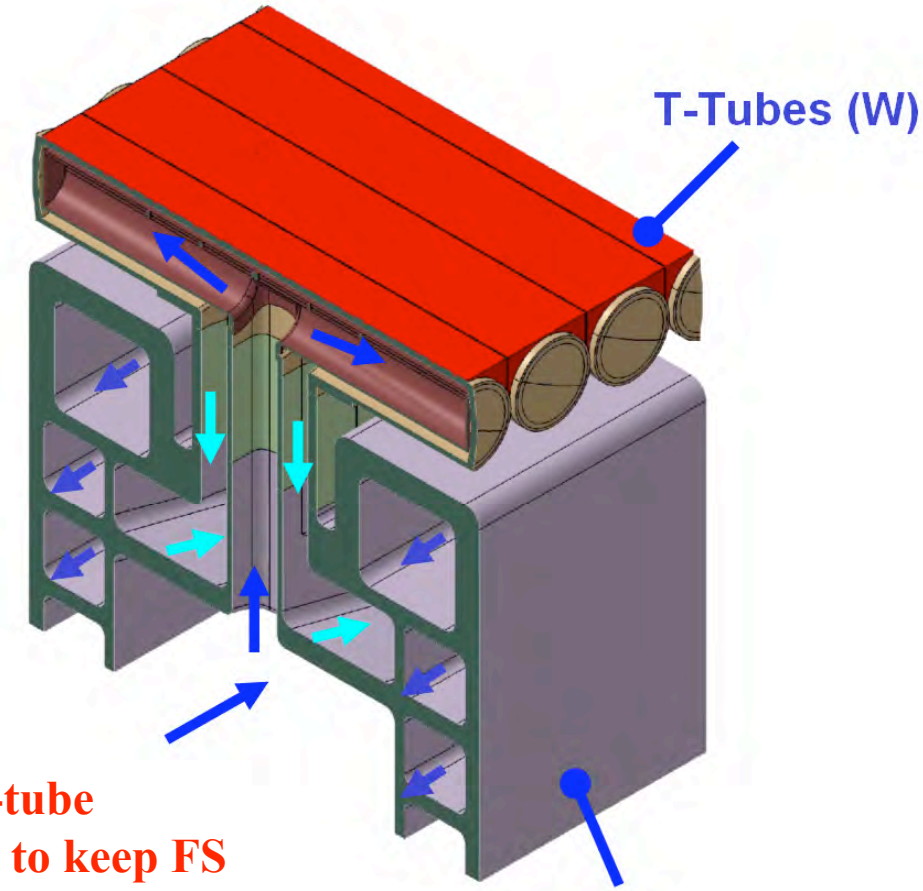

Details of T-tube manifolding to keep FS manifold structure within its temperature limit

UC San Diego

T-Tube Configuration Looks Promising as Divertor Concept for CS and Tokamaks

- Analysis results suggest reasonable temperature and stress parameters.

- However, there are key issues that need to be addressed, including:

  - Confirmation and optimization of the heat transfer performance of the He-coolant jet configuration for a reasonable pressure drop, including optimization of jet geometry parameters. (T/H analysis results confirmed by scaled experimental results at Georgia Tech. - High heat flux experiments on mock-ups required next)

  - The design assumes progress in the development of materials, including the development of W alloy with an operating temperature ranges of ~600-700°C to 1300°C under irradiation, and of a FS offering reasonable strength properties up to about 750°C (e.g. nano-sized ODS FS). (Need material R&D)

  - The fabrication of complex W components is challenging using conventional fabrication techniques (especially for such thin walled W tubes, ~1 mm). The fabrication techniques of such a W alloy cartridge including the end caps need to be demonstrated. In addition, techniques for joining the W alloy to the FS base through a functional gradient (in order to minimize thermal stresses) need also to be demonstrated. (PPI through SBIR grant)

Fabrication Process Being Developed at PPI as part of a SBIR Grant

- **Test articles from Phase-I**

- **T-tube W fabrication procedures include:**
  - **EL-Form**
  - **Brazing for joining W to FS**

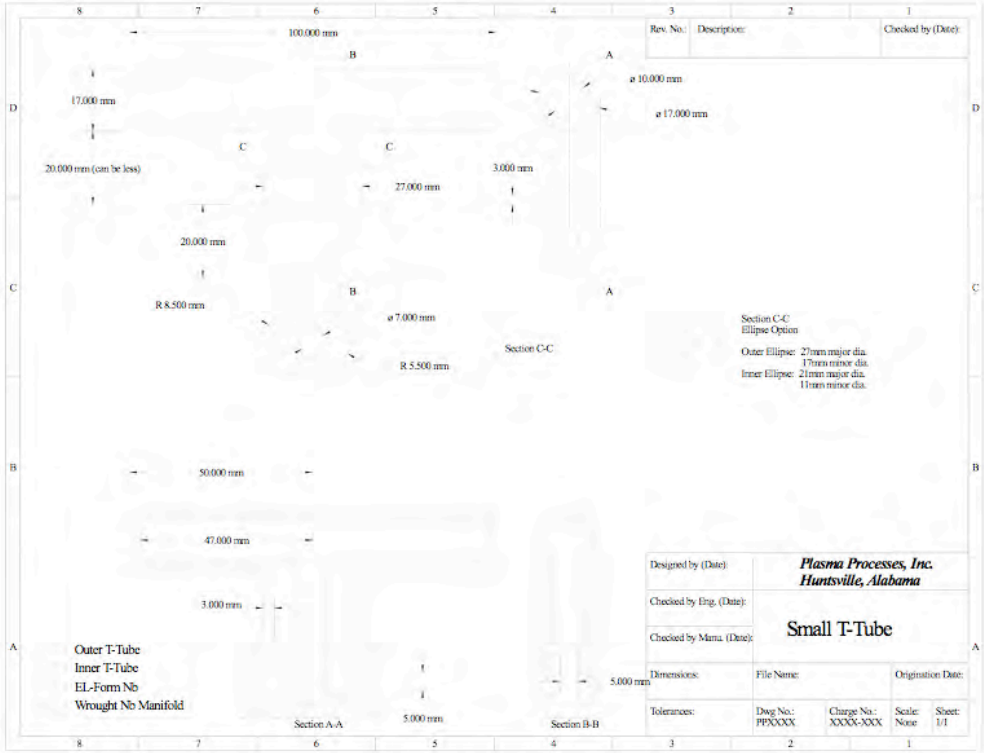

Plate-Type Concept

- The He-cooled plate-type divertor concept provides larger and fewer units (which minimizes the length of pressure joints).
  - Unit consists of a number of ~ 1-m long poloidal channels with a 2.2 cm toroidal pitch (typical toroidal dimension ~20 cm)
  - The plate is made of W-alloy with a 5 mm castellated W armor region
  - The concept makes use of a jet flow similar to the design of the finger and T-tube concepts to cool the heated surface
- In order to minimize thermal stresses, the unit was designed for uniform temperature distribution for the given heat flux and volumetric heat generation and flow conditions.
  - Tailored side and back wall thicknesses
  - Stagnant He insulating gap

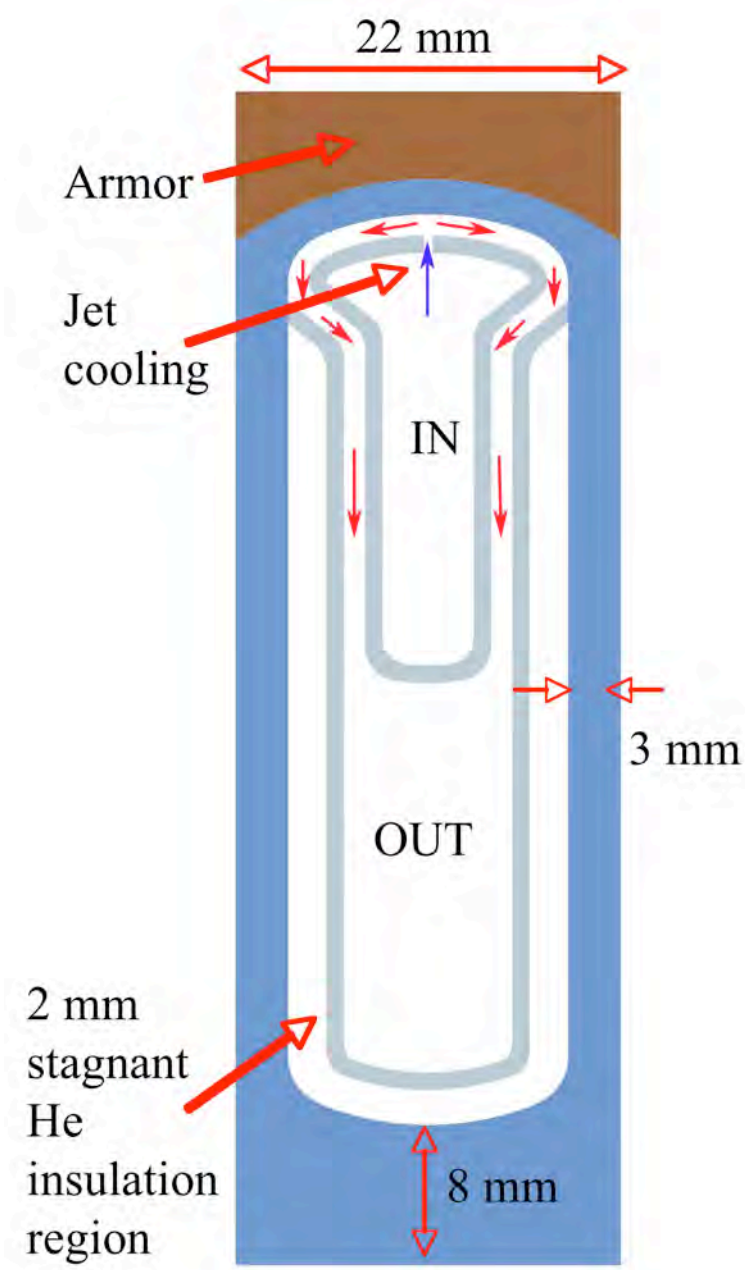

Overall Design, Fabrication and Assembly of the Plate-Type Divertor

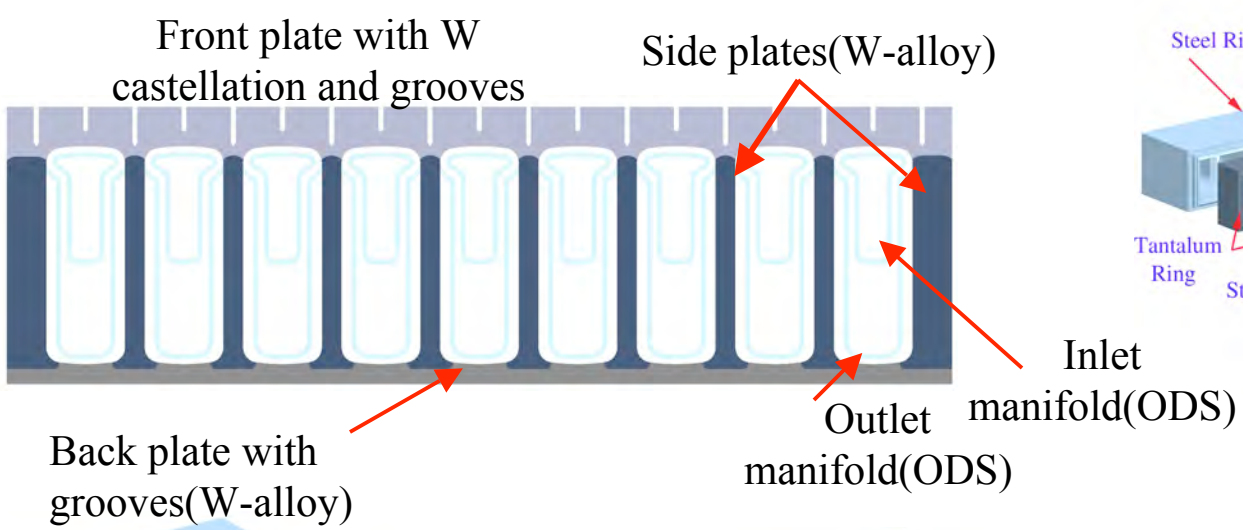

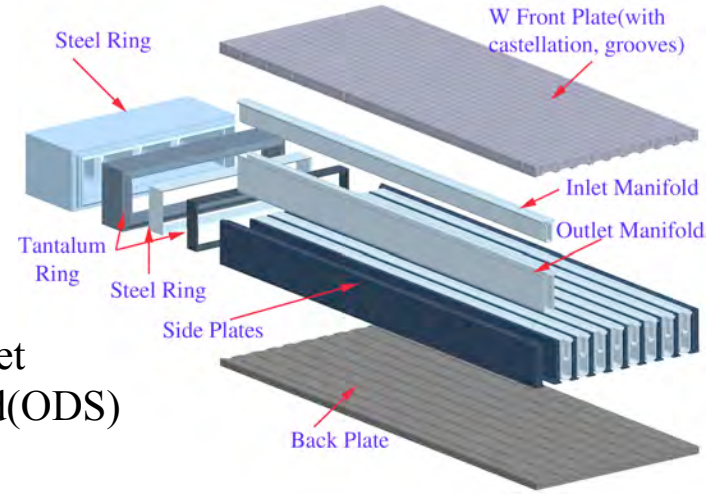

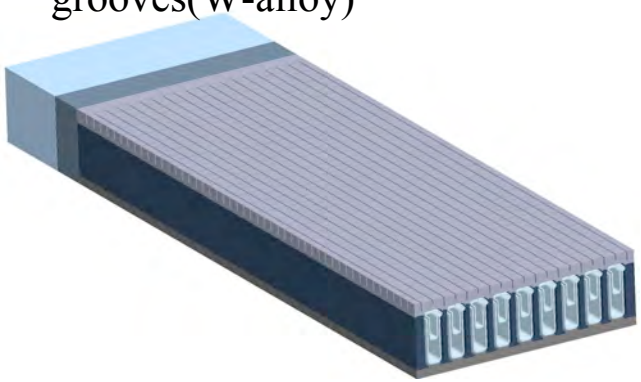

Assembling and joining the transition zones at both ends of the plate unit

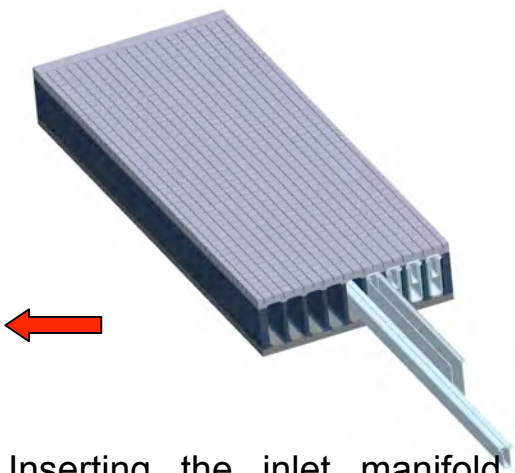

Inserting the inlet manifold and aligning it to the front plate, then inserting outlet manifold

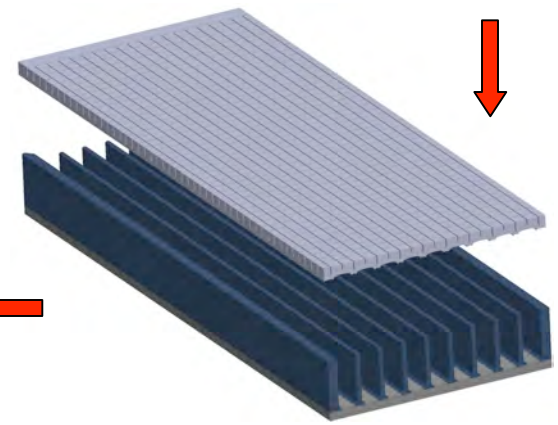

Brazing the front plate, side plates and back plate together to one unit

UC San Diego

Example Analysis Results for Plate Concept

- **Thermo-hydraulic and mechanical analysis performed using CFX/ANSYS**
  - **Surface heat flux = 10 MW/m^2**
  - **Vol. heat generation = 17.5 MW/m^3**
  - **He inlet/outlet temperatures = 600/667°C**
  - **He pressure =10 MPa**
  - **ΔP through jet region ~0.18 MPa**
  - **Pumping power/thermal power <10%**
  - **Maximum W armor temp. = 1853°C**
  - **Max. W structural alloy temp.= 1295°C (recrystallization limit ~ 1300°C)**
  - **Maximum thermal stress = 310 MPa**
  - **Max. thermal+primary stress = 359 MPa (assumed 3 Sm ~ 450 MPa)**
- **These results are encouraging; however, stress under reduced heat load or during transients need to be assessed because of the difference in thermal time scales between front and back regions.**

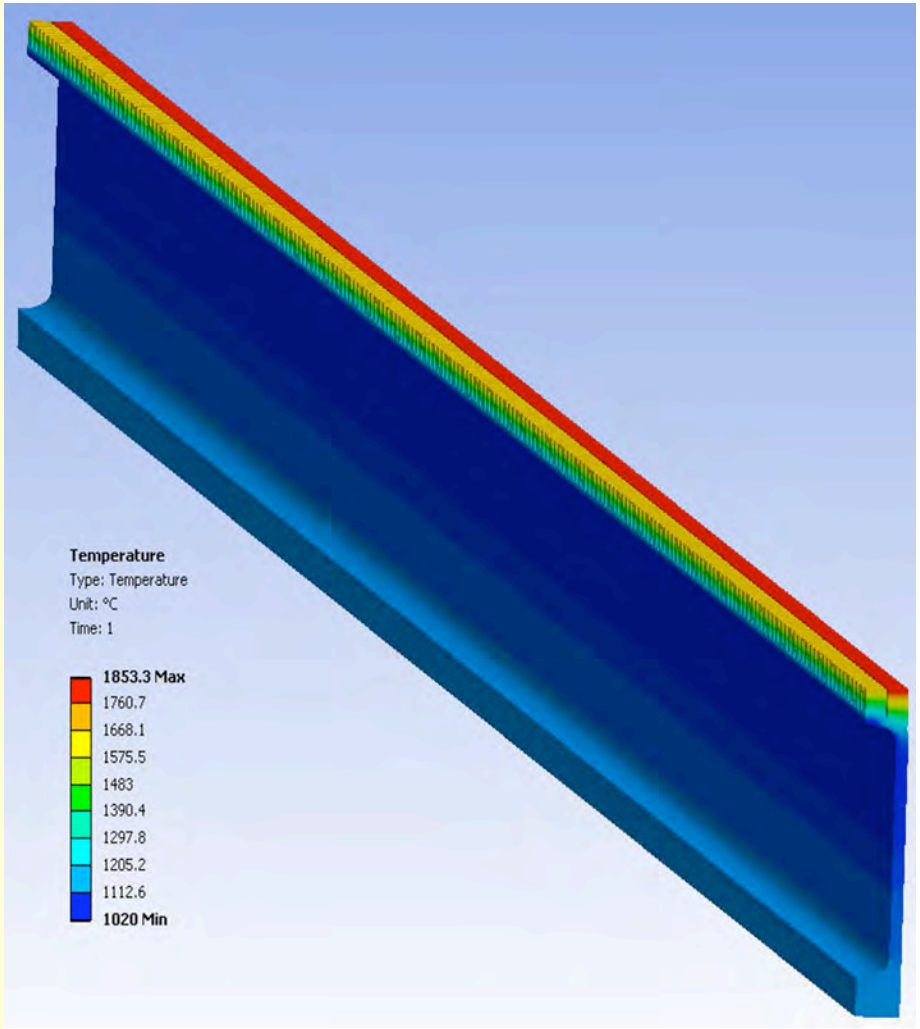

Temperature distributions

UC San Diego

Plate Concept Under Lower Surface Heat Flux

- **Thermo-hydraulic and mechanical analysis performed using CFX/ANSYS**
  - **Surface heat flux = 1 MW/m^2**
  - **Vol. heat generation = 17.5 MW/m^3**
  - **He inlet/outlet temperatures = 600/667°C**
  - **He pressure =10 MPa**
  - **ΔP through jet region ~0.18 MPa**
  - **Pumping power/thermal power <10%**
  - **Maximum W armor temp. = 750°C**
  - **Max. W structural alloy temp.= 897°C**
  - **Maximum deformation = 0.3 mm**
  - **Max. thermal+primary stress = 458 MPa (assumed 3 Sm ~ 450 MPa)**

- **These results indicate that the plate concept design is better applicable to regions with moderate heat fluxes, 5-7 MW/m^2.**

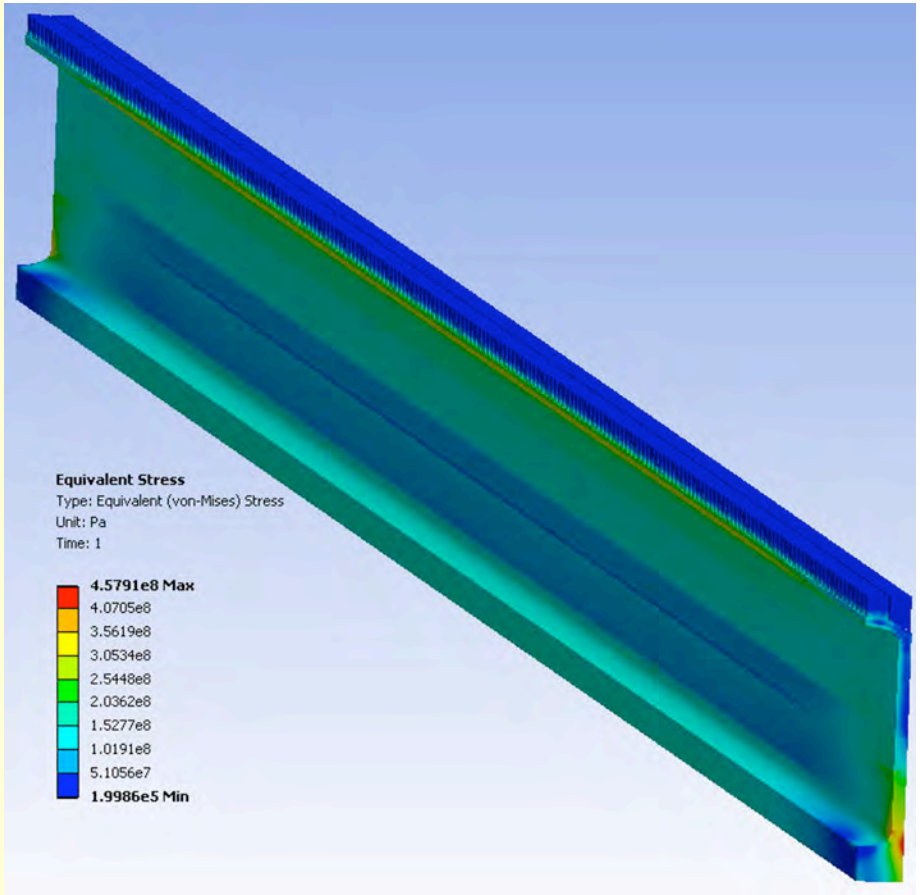

Stress distributions

UC San Diego

Thermal Response of the Plate-Type Divertor Under the ARIES-I Startup Scenario

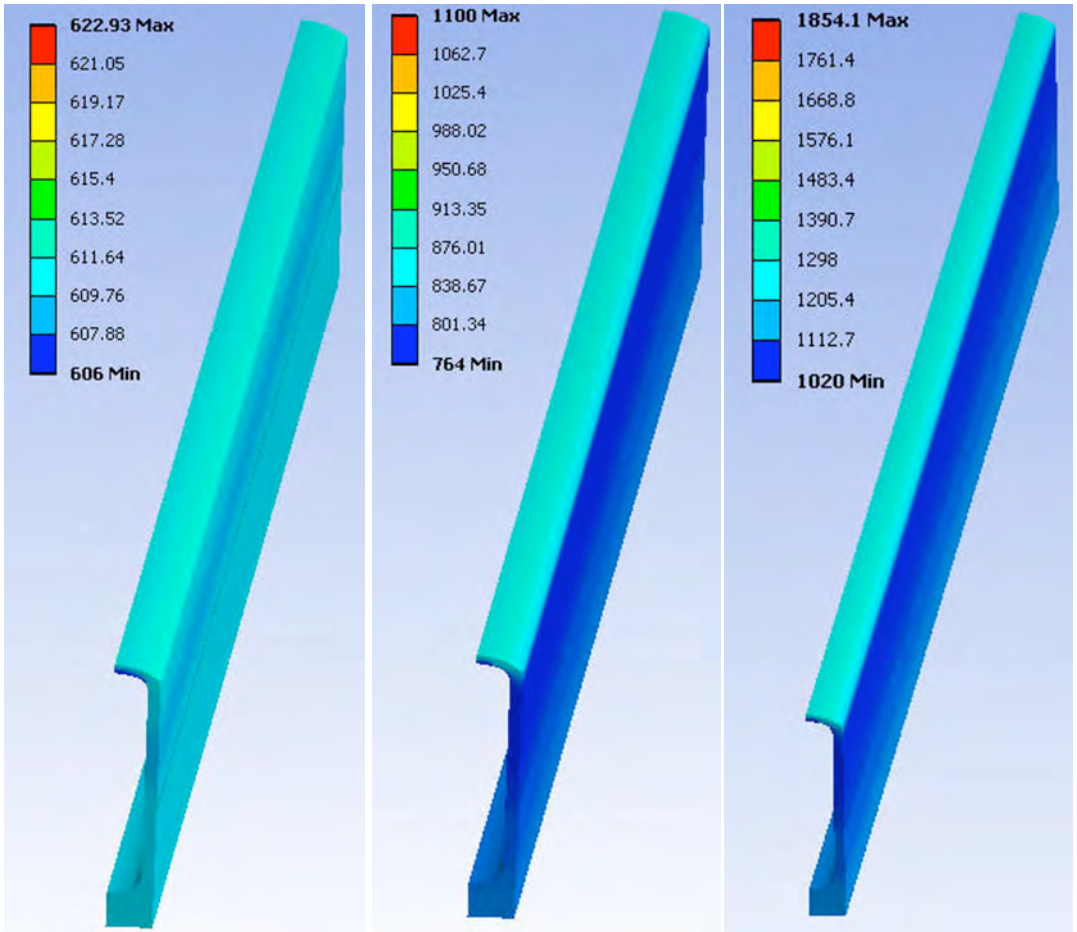

t=2100 s t=2300 s t=2500 s

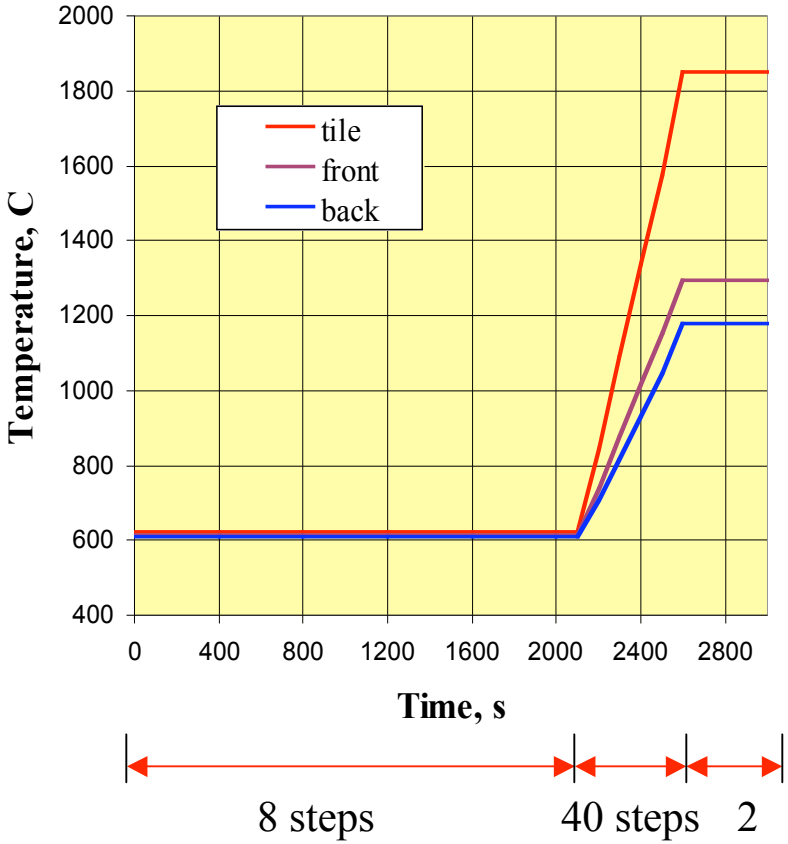

Temperature distributions of the W structure at different times

UC San Diego

Mechanical Response of the Plate-Type Divertor Under the ARIES-I Startup Scenario

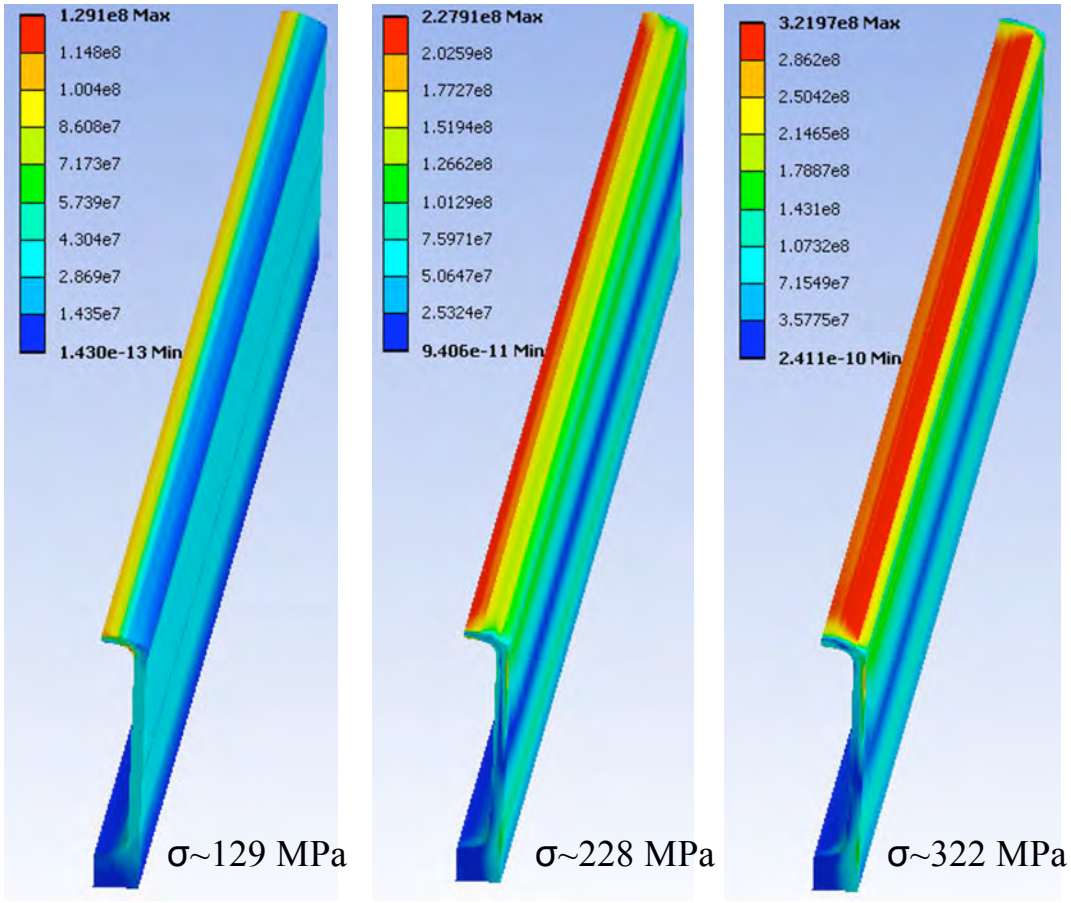

t=2000 s t=2300 s t=2500 s

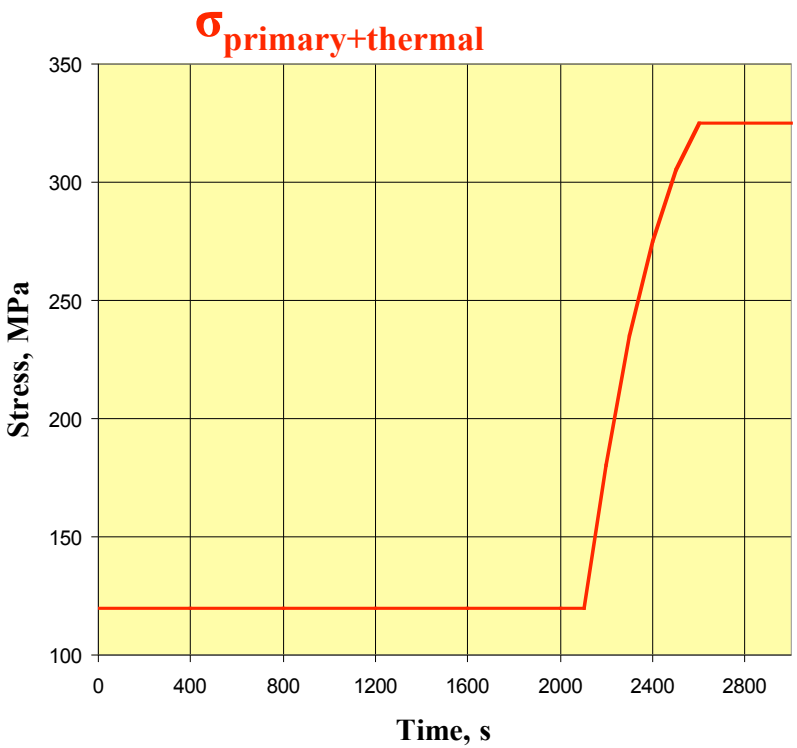

- **The results indicate that the stress levels in the ARIES-I startup scenario to be within the design limits (3Sm ~ 450 MPa).**

UC San Diego

Heat Flux on Divertor Target

- The heat flux on the divertor target plates is governed by a number of parameters including the fusion power, core and edge radiation fractions and peaking factor.
- The resulting heat flux footprint on the divertor can be approximated by some sort of Gaussian-like distribution.
- Clearly, only a fraction of the divertor would see very high heat fluxes
  - For example case, about 25% of the footprint results in a heat flux >6 MW/m^2 (zone 2).
  - Zones 1 and 3 see a much lower heat flux.
- Sometime, the distribution is skewed in one direction with effectively two zones: the high heat flux zone and a longer low heat flux zone next to it.

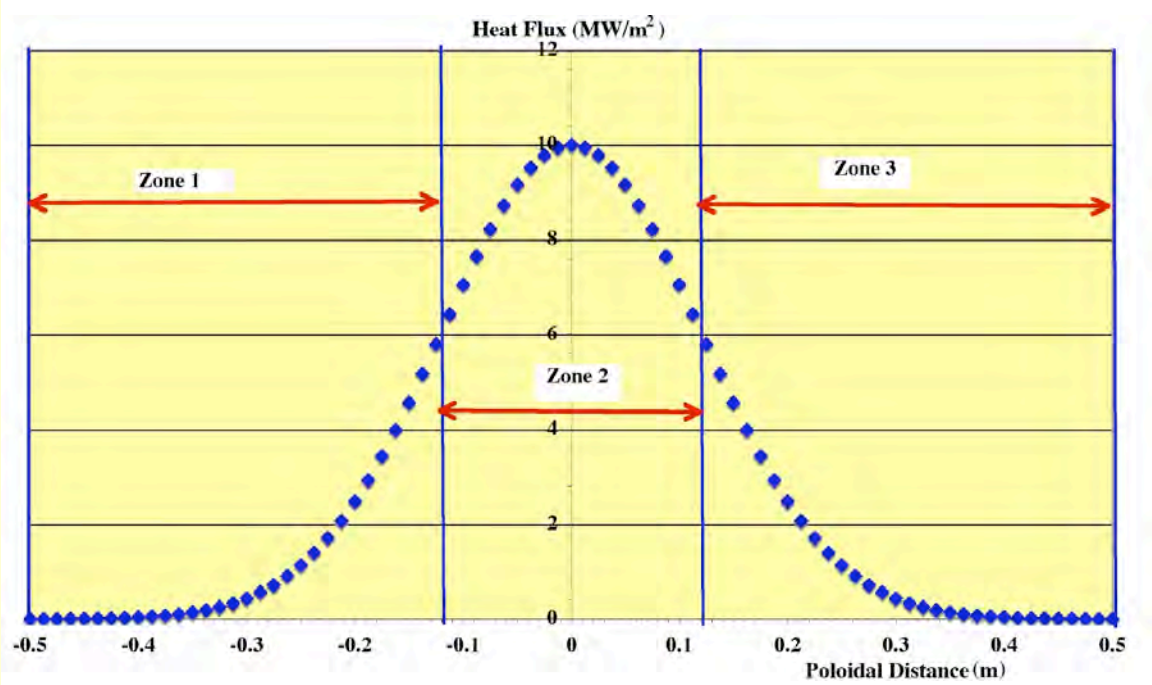

Example Symmetric Gaussian Profile with Average/Maximum Heat Fluxes of 3/10 MW/m^2 over a Poloidal Distance of 1 m

UC San Diego

Combined Divertor Configuration

- The divertor heat flux profile brings up the possibility of optimizing the heat flux accommodation and reliability measure (based on number of pressure joints or units) by utilizing the smaller-scale designs for the high heat flux region and the larger scale design (plate) for the lower heat flux region.
- Two possible combined configurations:
  - Separate design with smaller units in the high heat flux region and the plate design in the lower flux region and routing the coolant so as to cooled these regions in parallel.
  - Integrating the smaller scale unit within the plate design and routing the coolant through the integrated unit.

Key Features of the Typical He-Cooled Divertor Concepts for an Assumed Divertor Area of ~150 m^2

Divertor Concept	Unit Characteristic Dimensions	Number of Units for a Typical Tokamak	Allowable Incident Heat Flux (MW/m^2)
Finger	1.5 cm dia	~535,000	>12
T-Tube	10 cm x 1.5 cm	~110,000	~10-12
Plate	100 cm x 20 cm	~750	~6-8

UC San Diego

Example Integrated Plate/Finger Concept

- An integrated configuration combines the high q'' unit with the lower q'' unit in one design and provides the flexibility of including the high q'' region at any poloidal location along the design.
  - Design based on plate concept but with an integrated number of finger units in the high q'' zone

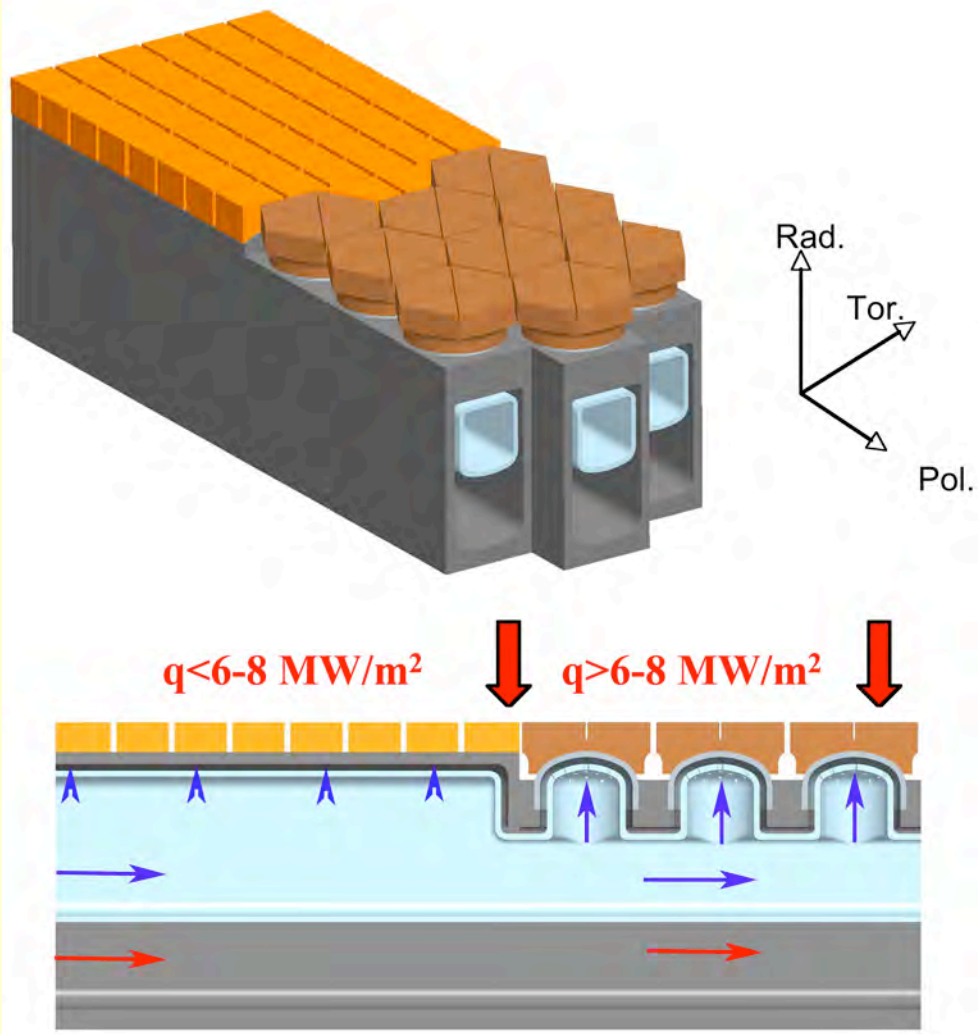

- For a high q'' zone of 25 cm, the no. of finger units within the ~750 integrated plate components is ~ 87,820 (compared with the 535,000 finger units required for full target plate coverage)

JC SanDiego

Integrated Plate/Finger Concept Includes:

- A front plate with castellation in the low q'' zone, grooves for brazing the side walls, and machined holes for inserting the modular tiles and caps in the high q'' zone
- A back plate with grooves for brazing in the side walls of the large He channels
- Side walls
- Hexagonal tiles and small caps, brazed together and inserted in the front plate in the high q'' zone.

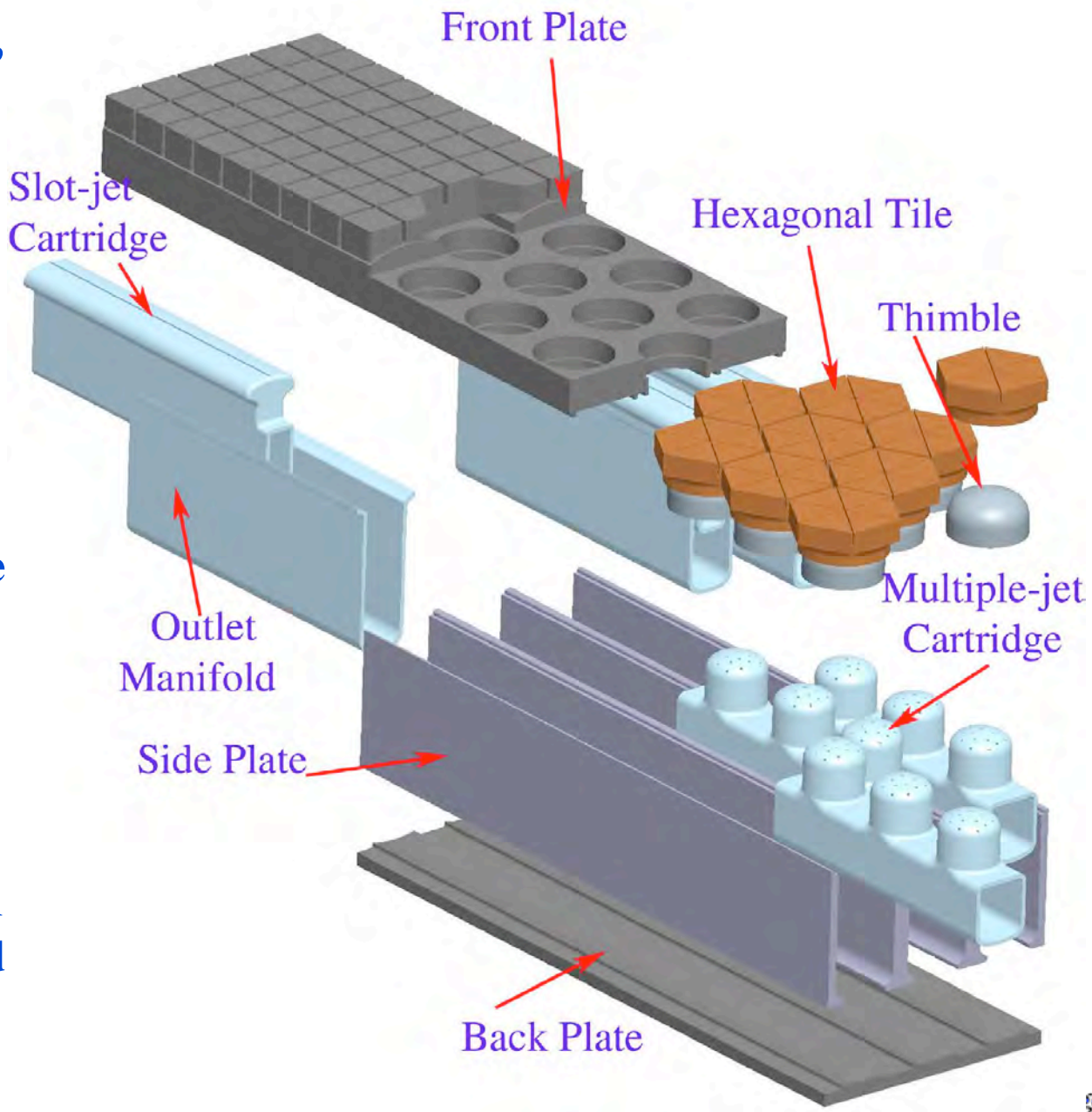

Fabrication and Assembly Sequence of the Two Zone Divertor Target Plate

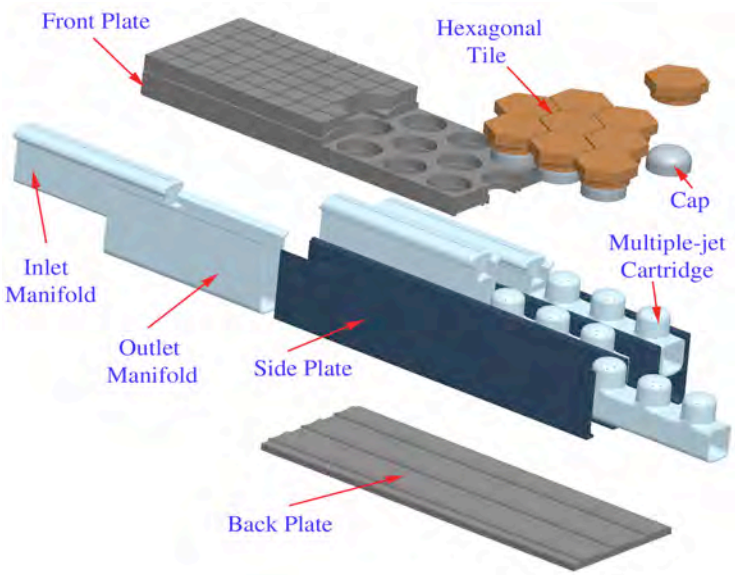

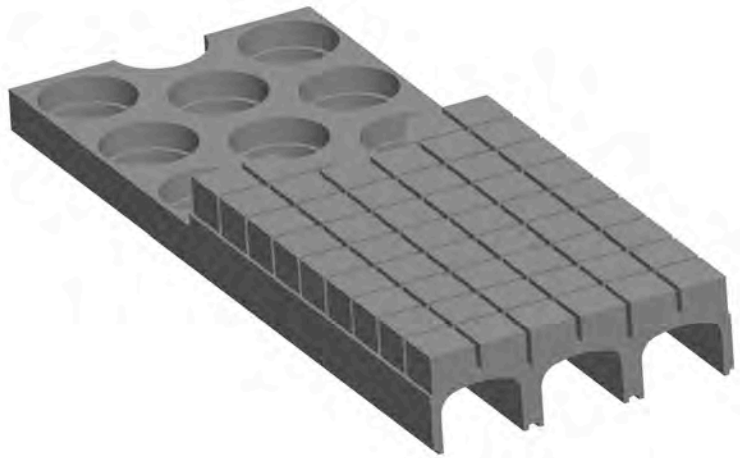

Fabricating the front plate with castellation at low heat flux zone, the grooves for brazing the side walls, and the machining the holes for inserting the modular tiles and caps in high heat flux zone.

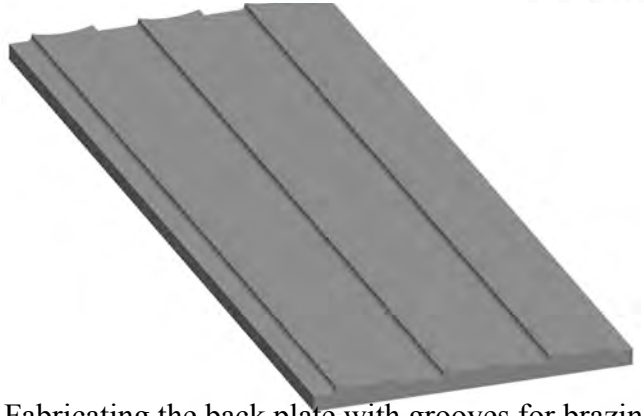

Fabricating the back plate with grooves for brazing in the side walls of large helium channels

Fabricating the side walls

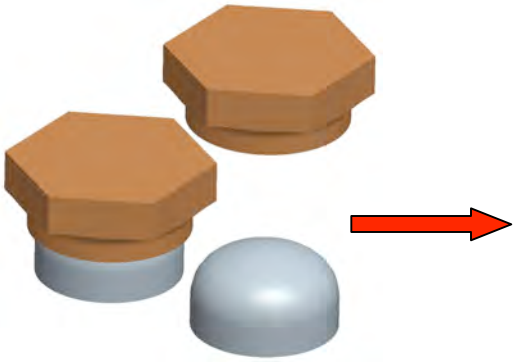

Fabricating the hexagonal tiles and small caps, and brazing them together to be inserted into the front plate in the high heat flux zone

UC San Diego

Fabrication and Assembly Sequence of the Two Zone Divertor Target Plate(cont.)

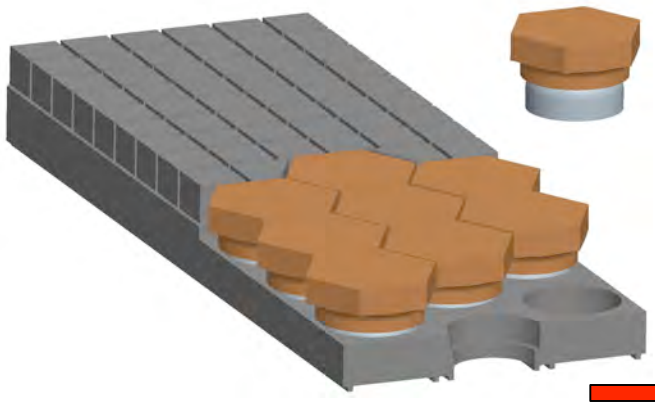

Brazing the small high heat flux modules into the front plate

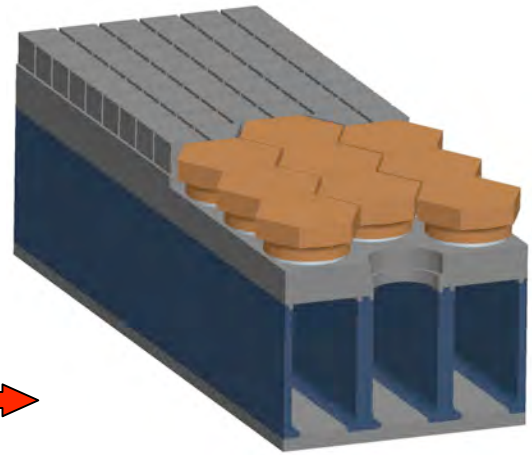

Brazing the front plate, the back plate and all the side plates together to one unit

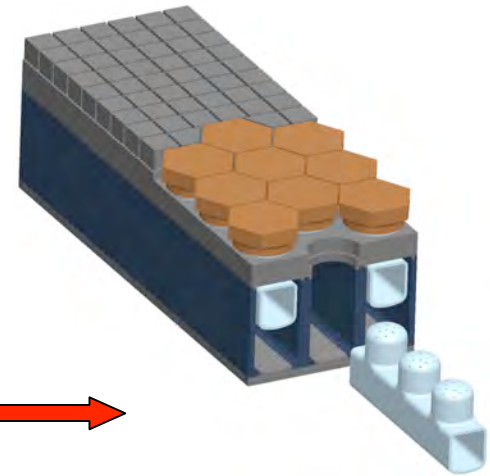

Inserting the manifold for high heat flux small modules into the plate unit and aligning it to the front plate.

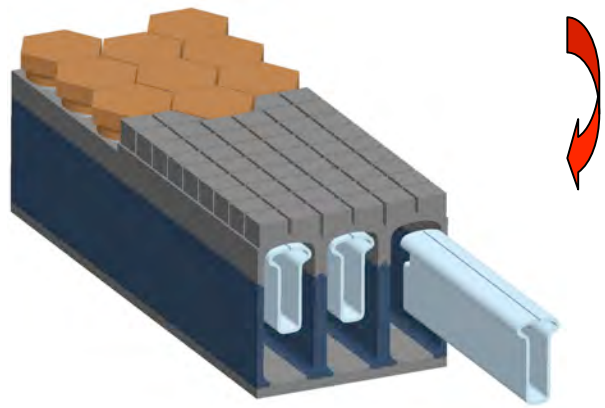

Inserting the inlet manifold for the low heat flux zone from the end of the low heat flux zone and aligning it to the front plate

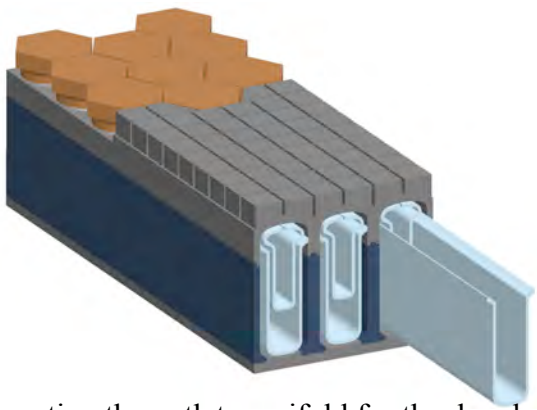

Inserting the outlet manifold for the low heat flux zone from the end of the low heat flux zone

UC San Diego

CFD Analysis of the Integrated Plate/Finger Concept

- **Parameters and results from thermo-fluid analysis (using CFX) for integrated concept with poloidal flow routing from the entry manifold at one end of the plate to the exit manifold at the other end, and parallel cooling of the fingers.**
  - **He inlet/outlet temperatures = 600/700°C; He inlet pressure = 10 MPa**
  - **Incident q'' = 10 MW/m^2 and neutron volumetric heat generation = 17.5MW/m^3**
  - **Maximum jet velocity = ~ 250 m/s; maximum h ~5.84x10^4 W/m^2-K**
  - **$P_{pumping}$ /$P_{thermal}$ ~7.5%**

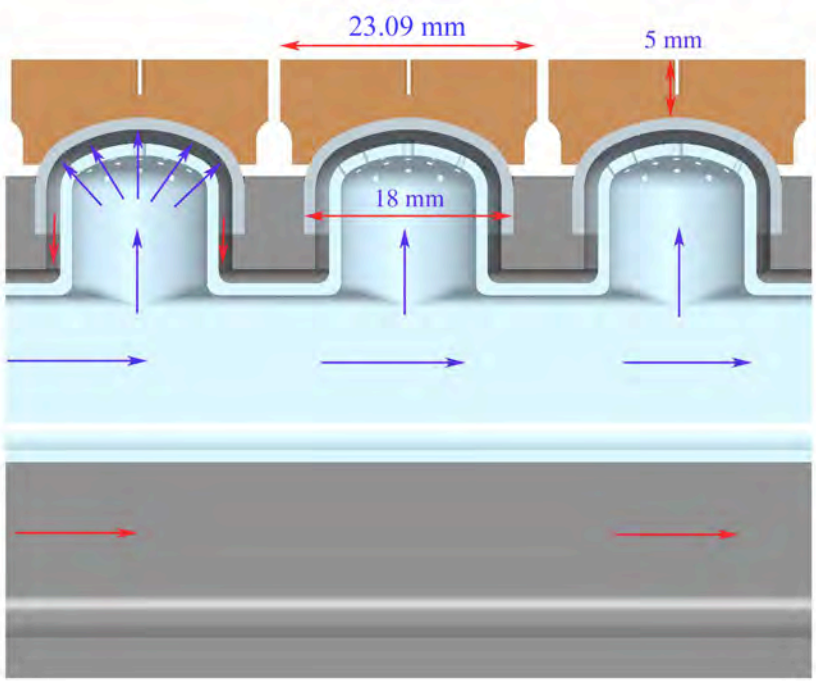

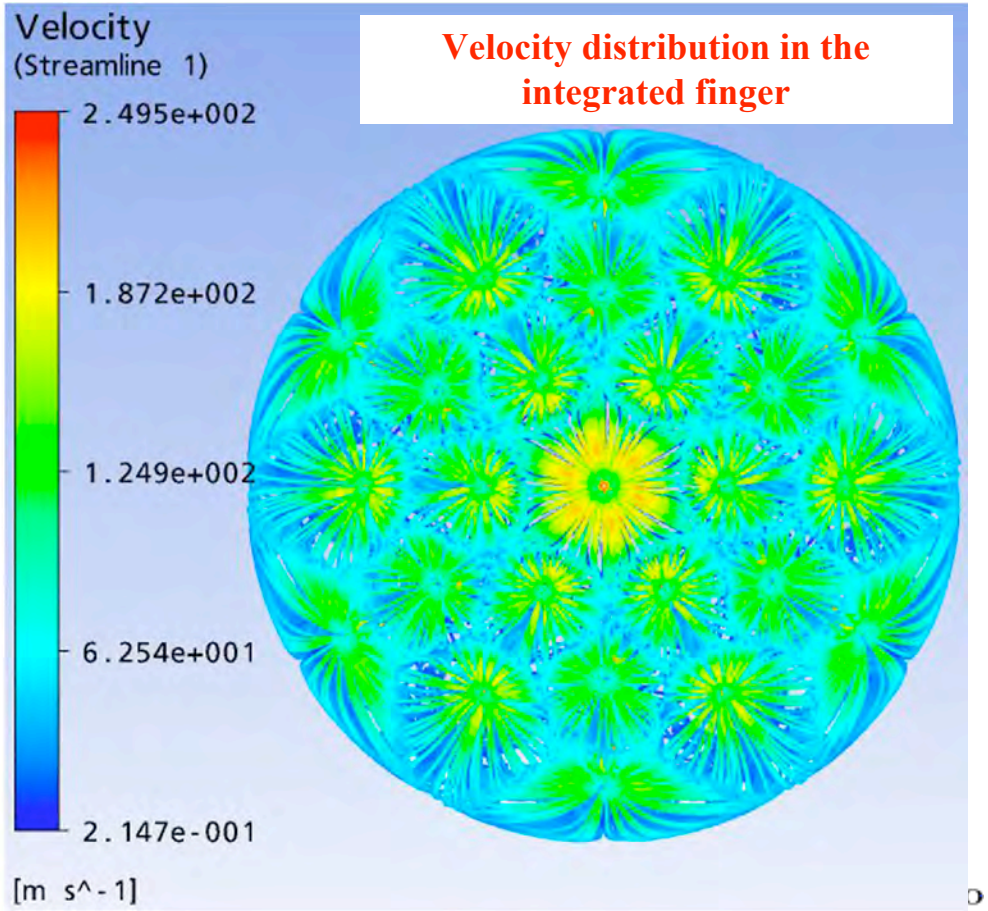

Velocity distribution in the integrated finger

Thermo-Mechanic Analysis of Finger Module with Thermal Load of 10MW/m^2 and 17.5 MW/m^3

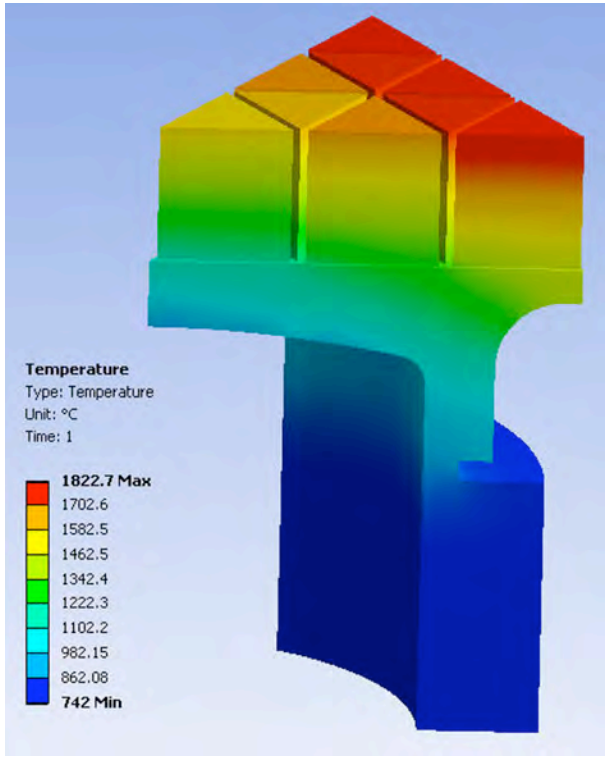

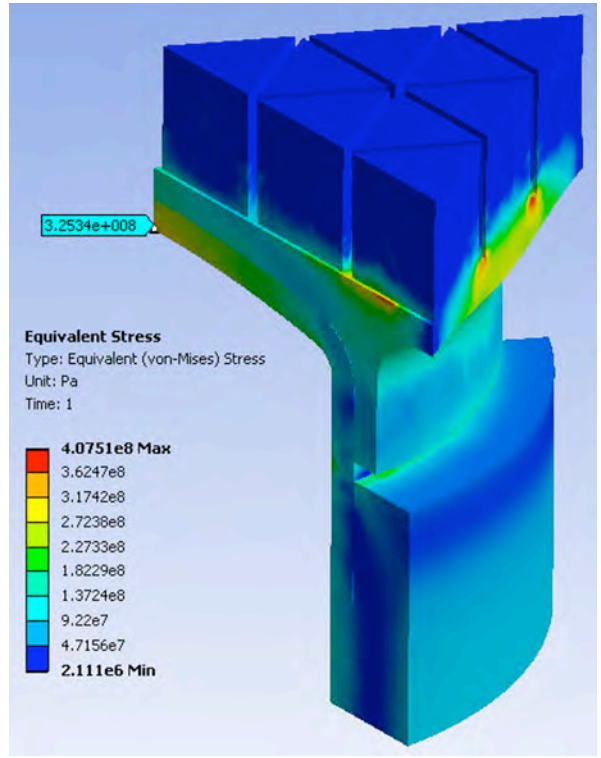

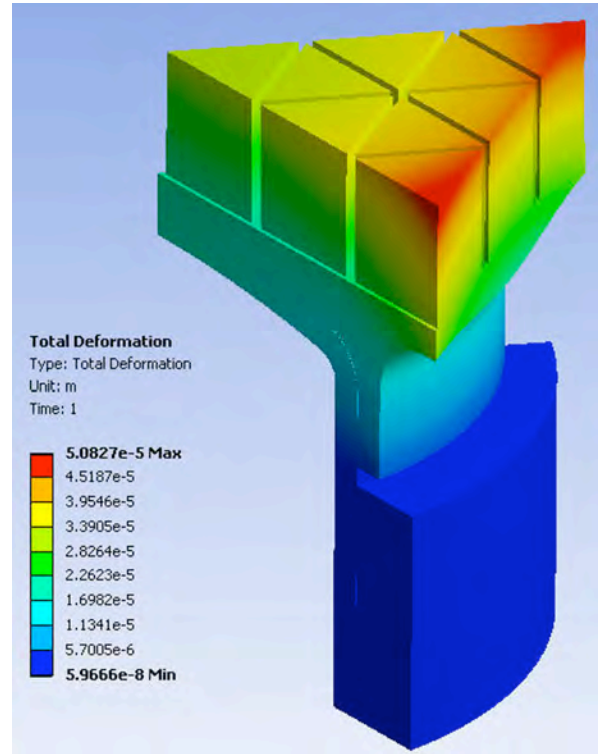

- **W armor is assumed to be castellated with ~4.45 mm long triangle, 0.25 mm gap and 4 mm thickness.**
- **Max. armor temperature = 1823 °C**
- **Max. Thimble temperature = 1210 °C (< assumed allowable of 1300 °C)**
- **Max. primary+thermal stress = 408 MPa, (Max. thimble stress σ_{p+s} = 325 MPa)**
- **Max. pressure stress = 110 MPa (assumed Sm ~ 150 MPa)**

Summary for Integrated Concept

- A possibility of optimizing the design is to combine different configurations in an integrated design based on the anticipated divertor heat flux profile.

- An example of such an integrated design has been proposed, consisting of small finger units in the high heat flux region integrated in a larger plate design.

- Its performance in term of accommodating the incident heat flux within the material stress and temperature limits is comparable with the original finger unit but is achieved with much fewer units and pressure joints.

- These initial results are encouraging in assessing the potential of such a concept, but further work is needed for a more complete assessment, including more design details on the fabrication and assembly procedures and detailed analyses of transient events.

Extra Slide

UC San Diego

Transient Response of the Plate-Type Divertor During Reactor Start-up

- **ARIES-I start-up scenario:**
  - **$0 \leq t \leq 2100$ s, $P_Q \sim 0$, others in lower power;**
  - **$2100 \leq t \leq 2500$ s, power ramp-up to full power;**
  - **$t \approx 2500$ s, the steady-state conditions obtained.**

- **Constant helium flow rate, inlet temperature of 600 ºC, and pressure of 10 MPa.**
- **Transient thermal conditions (temperature distributions vs. time) are directly coupled into the transient structural model:**
  - **zero thermal stress at coolant inlet temperature (600 ºC).**
  - **constant He pressure=10 MPa.**
  - **no channel bending, but free expansion.**
  - **no stress transferring from tiles.**

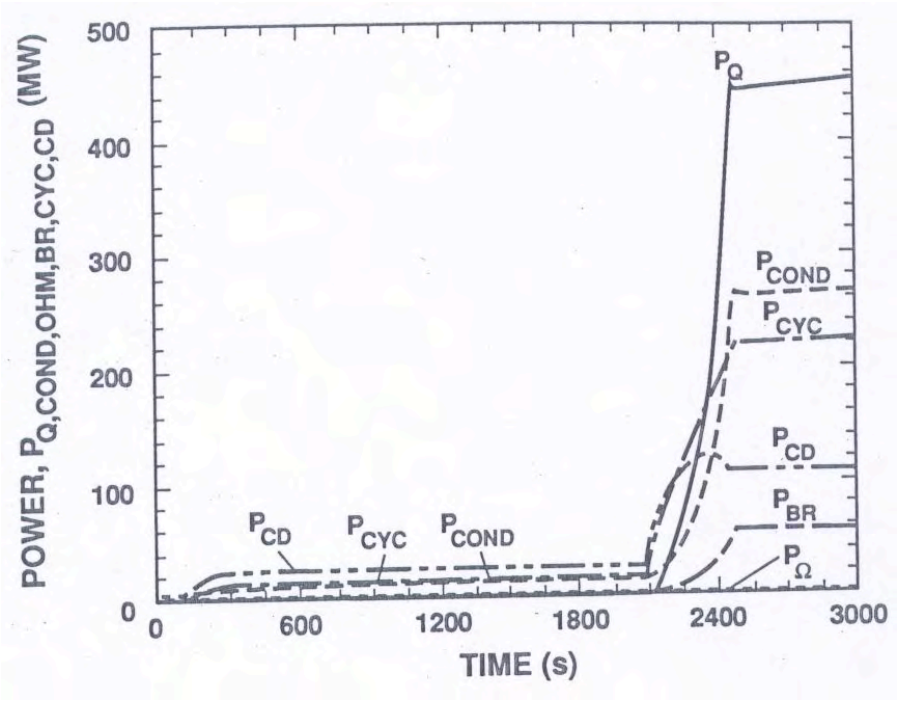

P_Q: α-particle heating power; P_{COND}: transport power loss;

P_Ω: ohmic dissipation; P_{BR}: bremsstrahlung power;

P_{CYC}: synchrotron power; P_{CD}: current-drive heating.

(It has been demonstrated in steady-state that the stresses transferring from the tiles to the structure would be minimized to zero if the tile castellation is small enough, for example smaller than 5 mm (tor.) x 5 mm (pol.).)