Progress in Design of Low Aspect Ratio DEMO, SlimCS

Kenji Tobita
JAEA

Outline of talk

- ❑ Concept of SlimCS
- ❑ Divertor design
- ❑ Maintenance scheme

Concept of SlimCS

SlimCS — DEMO design

"SlimCS"

Central Solenoid

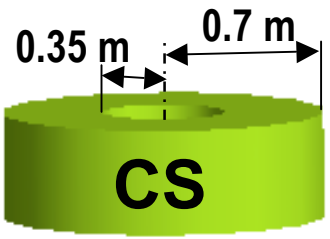

Major radius R_p	5.5 m
Minor radius a	2.1 m
Aspect ratio A	2.6
maximum field B_{max}	16.4 T
Fusion output P_{fus}	2.95 GW
Electric output P_e	1 GWe

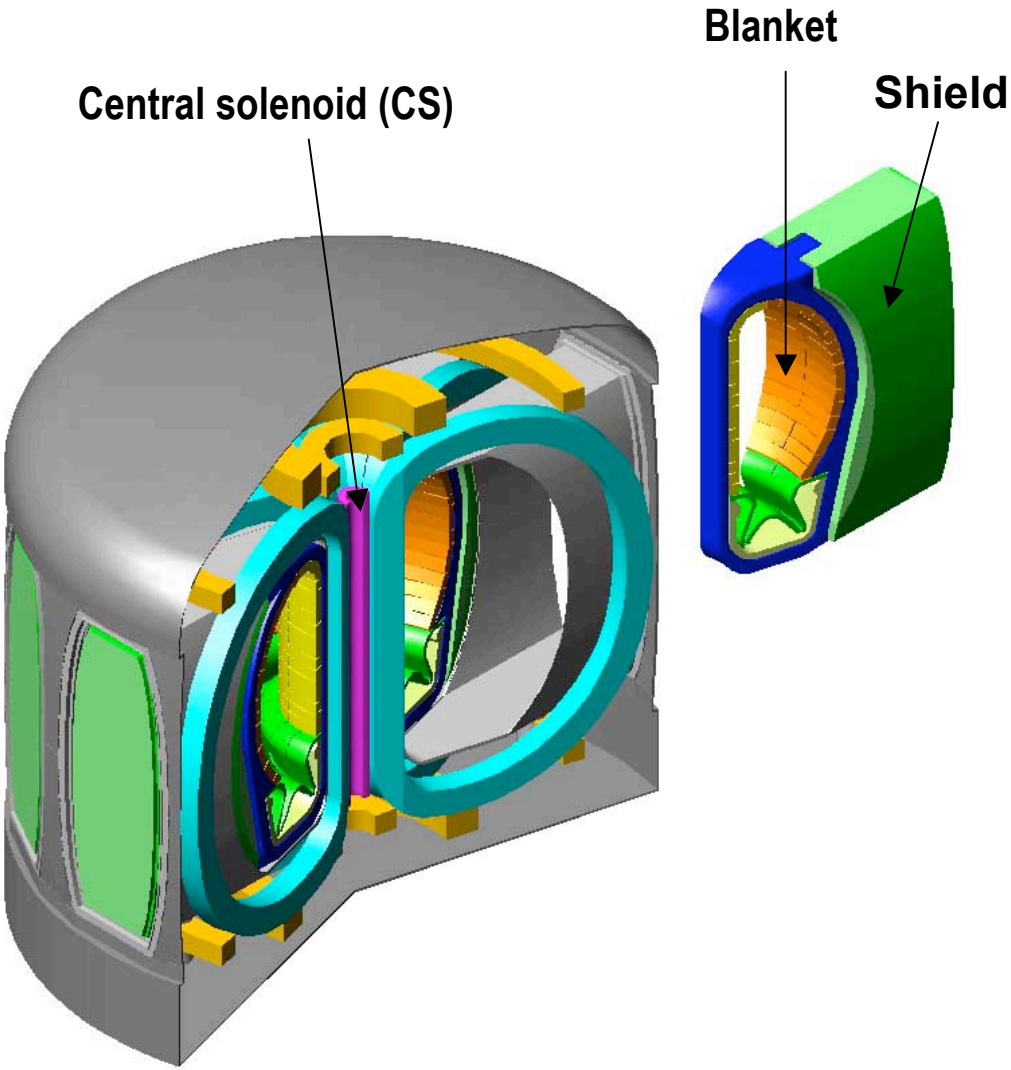

Impact of "slim CS"

"Small-size CS reduces E_{TFC}"

E_{TFC} of SlimCS:
only 50 GJ (B_{max}= 16.4T) ⟷ ***ITER : 41 GJ (B_{max}= 11.8 T)***
SSTR : 140 GJ (B_{max}= 16.5 T)

Virial theorem: $M = \frac{Q\rho E}{\sigma}$

structure weight → M; geometric factor → Q; stored energy → E; design stress → σ

Construction cost ↘

TF coils: 6,200 tons

(cf. TFC of SSTR: 11,200 tons)

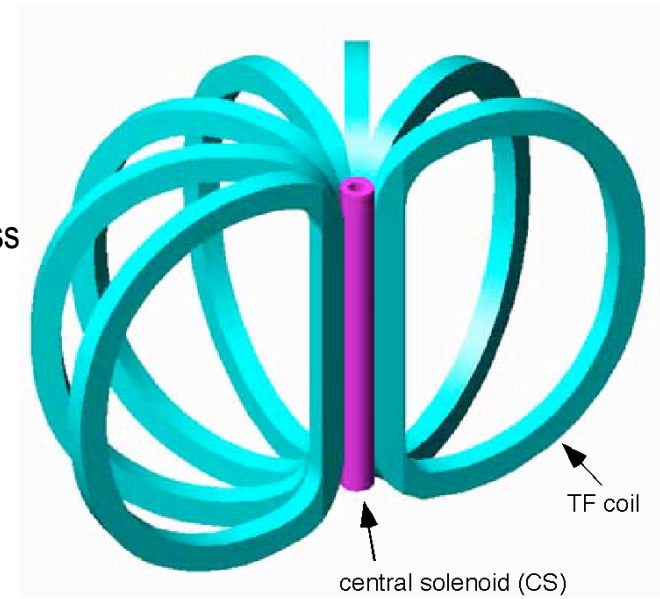

R_{CS} = 0.7m

Why we can reduce CS size?

- Access to high β_N
- ELM control (maybe)

Role of CS	metric	most of operation Steady state	< 1% I_P ramp phase
plasma shaping	I_{cs}	important	important
V•sec supply	$\Delta B_{cs} S_{cs}$	less important	Important but not necessary

Regarded as marginal extension of non-inductive CD technique

↓

Large S_{CS}, waste of space!

Placing value on plasma shaping,
you can reduce CS size dramatically.

Impact of CS size

Systems code analysis shows

1) a large impact of CS size on reactor weight
2) broad minimum on A

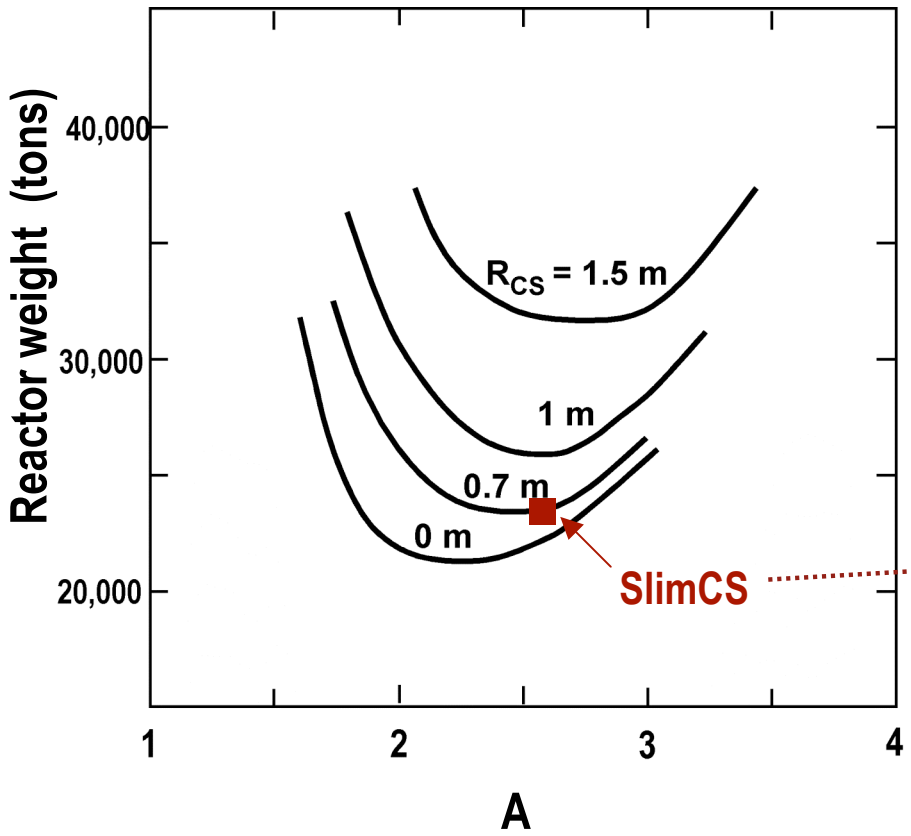

Assumptions:

- P_{fus} = 3 GW
- HHy2 = 1.3
- κ, β_N: A-dependent
- TFC stress. 800 MPa

R_{cs} = 0.7 m allows

- $\Delta\Psi_{+/-}$ = 38 Wb
- I_p^{CS} = 3.8 MA

Design parameters of SlimCS

Major radius, $\mathbf{R_p}$	5.6 m	He fraction, $\mathbf{f_{He}}$	5%
Minor radius, **a**	2.1 m	Ar fraction, $\mathbf{f_{Ar}}$	0.23%
Aspect ratio, **A**	2.6	Total stored energy, $\mathbf{W_{tot}}$	1,170 MJ
Ellipticity, κ_{95}	2.0	Hot ion stored energy, $\mathbf{W_h}$	299 MJ
Triangularity, δ_{95}	~0.35	Total beta, $\langle\beta\rangle$	5.75%
Safety factor, $\mathbf{q_{95}}$	5.4	Hot ion beta, $\langle\beta_h\rangle$	1.38%
Toroidal field, $\mathbf{B_T}$	6.0 T	Poloidal beta, β_p	1.56
Maximum field, $\mathbf{B_{max}}$	16.4 T	Normalized beta, β_N	4.3
Plasma current, $\mathbf{I_p}$	16.7 MA	Fusion output, $\mathbf{P_{fus}}$	2,950 MW
Plasma volume, $\mathbf{V_p}$	935 m^3	Current drive power, $\mathbf{P_{CD}}$	60-110
Density, $\langle n_e\rangle$	1.1×10^{20} m^{-3}	Bootstrap fraction, $\mathbf{f_{BS}}$	70-80%
Peak density, $\mathbf{n_e(0)}$	1.6×10^{20} m^{-3}	Enhancement of τ_E, **H89P**	2.59
Temperature, $\langle T_e\rangle$	17 keV	Enhancement of τ_E, **HHy2**	1.3
Peak temp, $\mathbf{T_e(0)}$	28 keV	Fusion Gain, **Q**	26-50
$\mathbf{n_e/n_{GW}}$ $(n_{GW}=I_p/\pi a^2)$	1	Wall load, $\mathbf{P_n}$	~3 MW/m^2
Fuel purity	83.5%	Div. Peak heat flux	10 MW/m^2

Selection of blanket materials

Structure	• **RAFM (F82H)** – Japanese prime option of ITER-TBM • ODS steel – premature
Coolant	• **Pressurized water** **(PWR condition: ~15MPa,285-325ºC)** –compatible with RAFM but low η_{th} • Supercritical water (~25MPa,280-510ºC) – concern about corrosion of RAFM 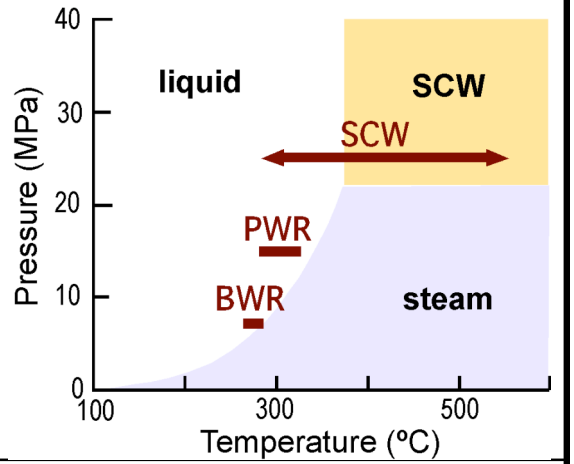
Breeder	• **Li_2TiO_3** – good T recovery property, prime option of ITER-TBM 90%-enriched ^6Li required because of reduced TBR • Li_2O – concern about T recovery at high temperature
Multiplier	• **Be** – can meet TBR ~ 1.05, but concern about swelling • $Be_{12}Ti$ – TBR not sufficient when used with Li_2TiO_3

SC attainable B_{max} ~ 16 T

Candidates:

- **Nb_3Al** Rapid-Heating Quenching and Transformation
- **HTS (Bi-2212)** $Bi_2Sr_2CaCu_2O_x$

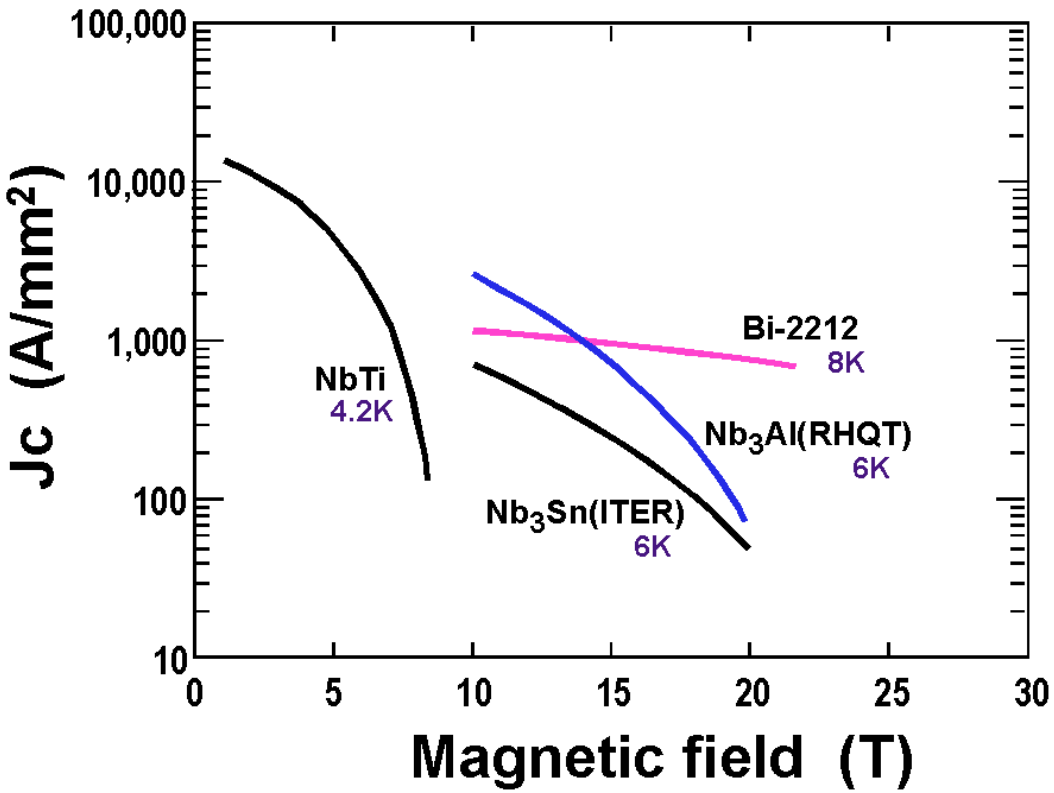

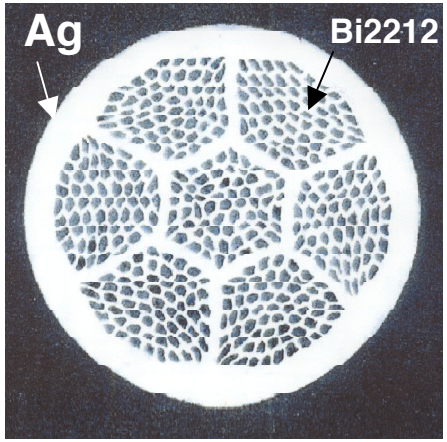

Why we choose Nb_3Al

Only small increment of B_{max} expected by HTS

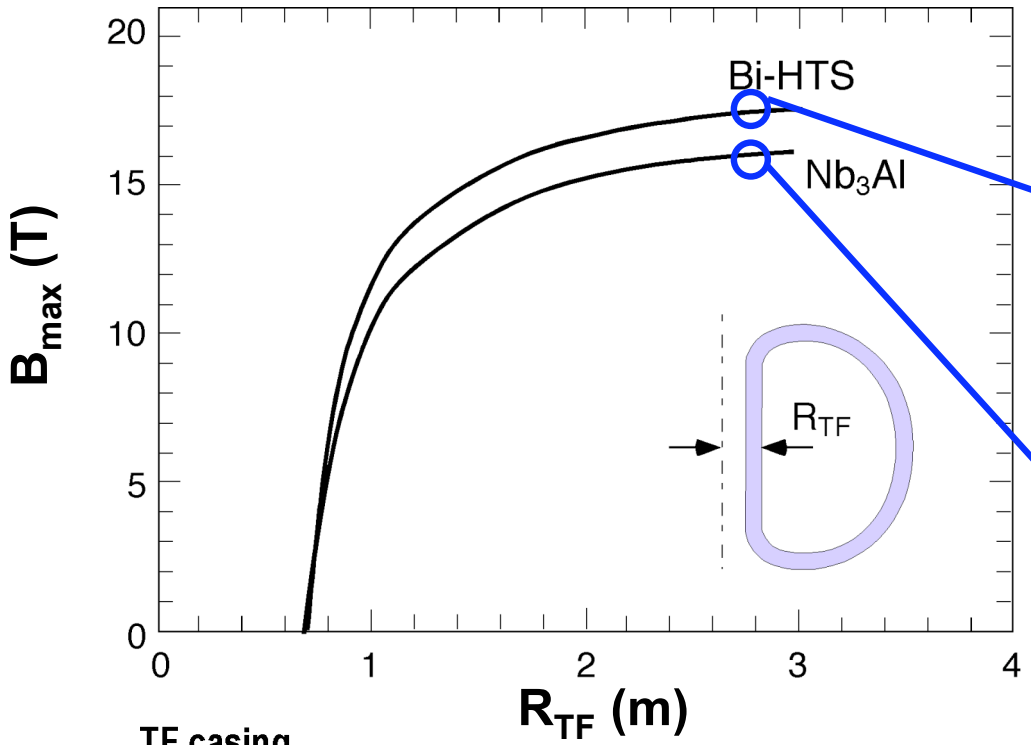

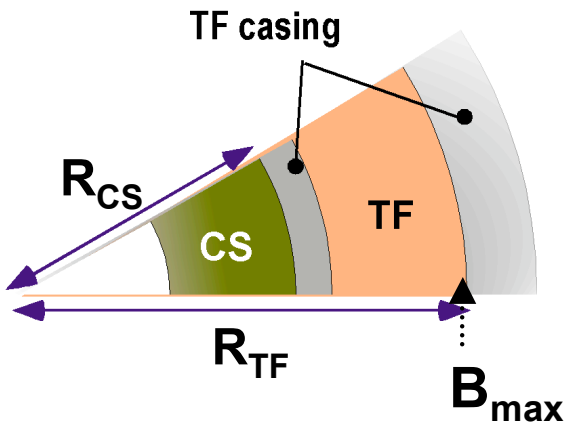

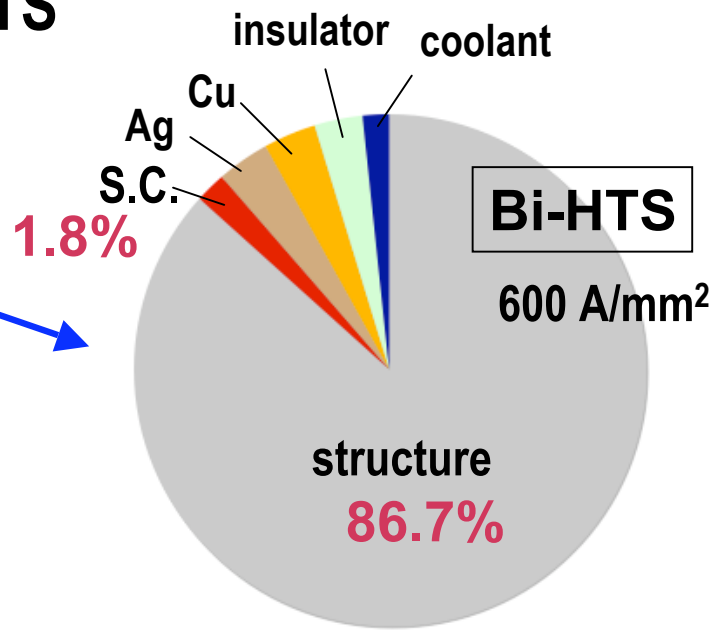

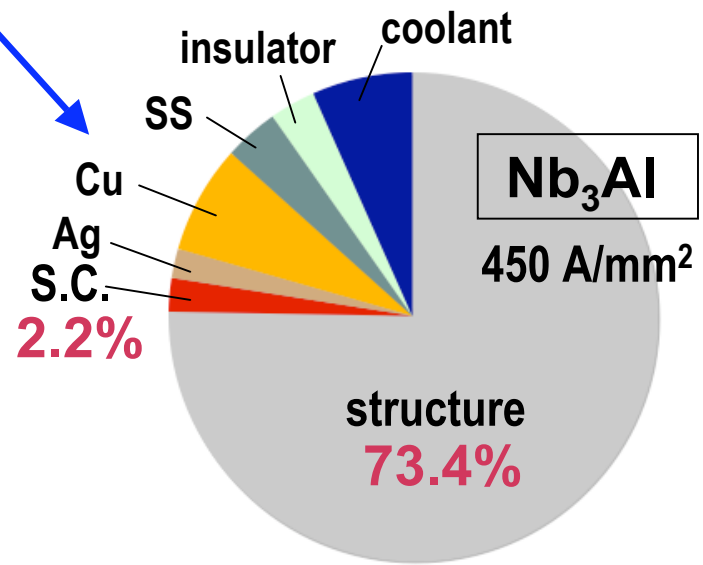

Divertor Design

Concept of divertor plate

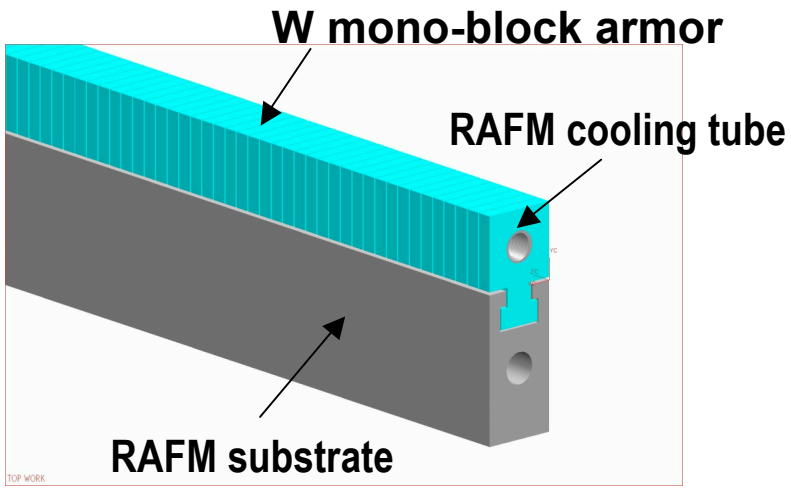

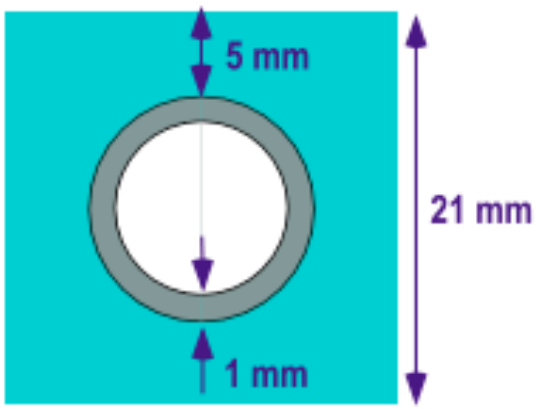

	ITER	DEMO
Cooling tube	Cu-alloy	RAFM
Armor	CFC/Be/W	W
Coolant	water 100℃, 4MPa	water 200-300℃
Heat load	≤ 20 MW/m^2	≤ 10 MW/m^2

Thermal conductivity 1/10 of Cu

1/2 of ITER
Handle power of x6

Issues on divertor design

	Heat	Particle
Physics	Source：Steady heat flux ELM (I, II, III, …) Thermal quench SOL: heat flux width Radiative cooling: Detach / semi-detach / attach Control	Gas Puff: D / Z Compression & pumping: Shape of divertor Pumping speed Transport of Z
Engineering	Heat flux: Allowance for heat removal Reliability: Thin-walled cooling channel Joint of the channel and armor Crack, blister of armor	Erosion: Sputtering by D, T, He and Z Defect: Blister Crack Irradiation damage Synergy

Problem: Knowledge on them is premature

Prime target	$\phi_{div} < 10$ MW/m^2	$T_e^{div} < 10$ eV

SOLDOR/NEUT2D analysis

2D Fluid simulation of SOL and divertor

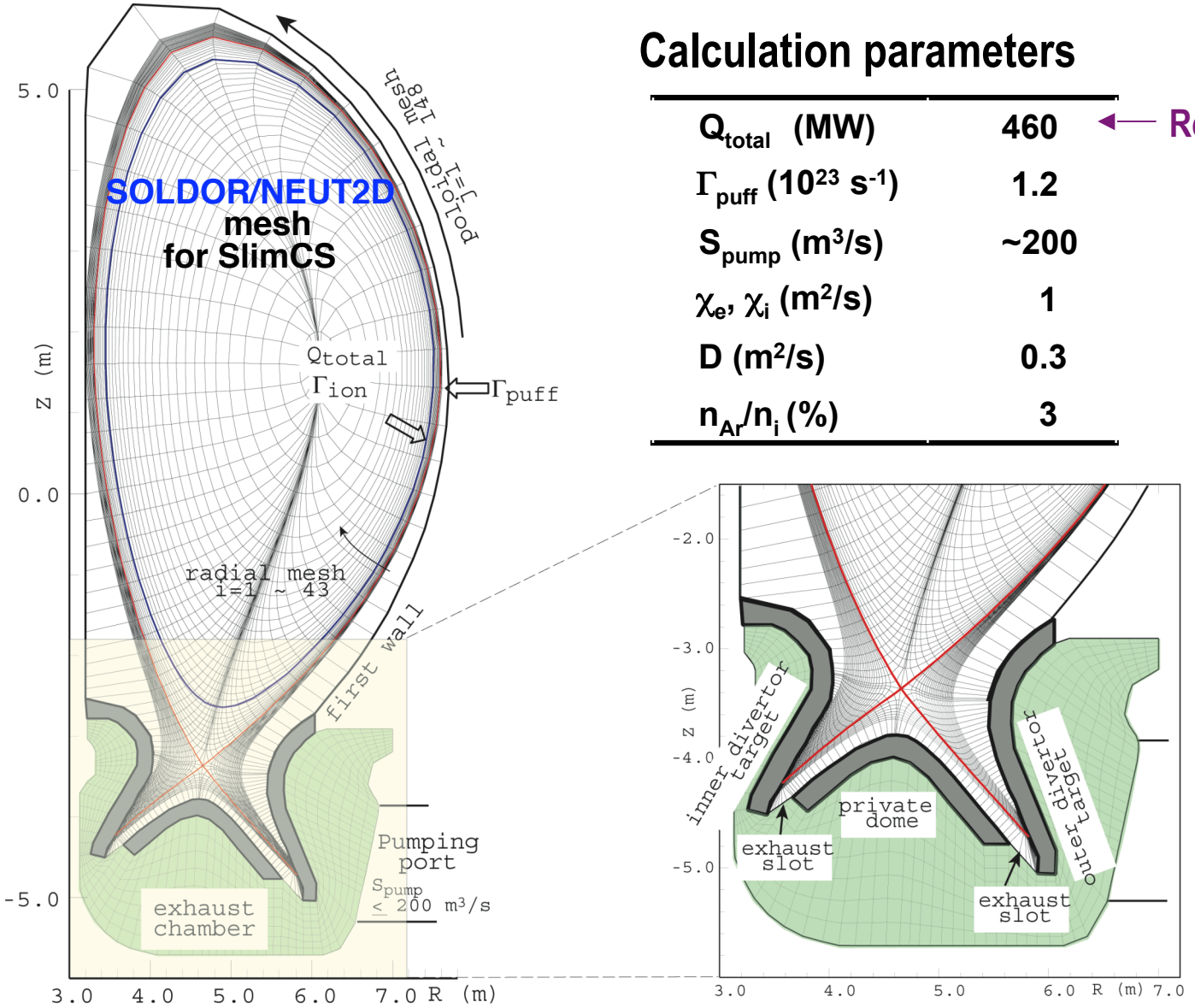

Calculation parameters

Q_{total} (MW)	460
Γ_{puff} (10^{23} s^{-1})	1.2
S_{pump} (m^3/s)	~200
χ_e, χ_i (m^2/s)	1
D (m^2/s)	0.3
n_{Ar}/n_i (%)	3

Reduced for convenience (actually, 550 MW)

Result for conventional divertor

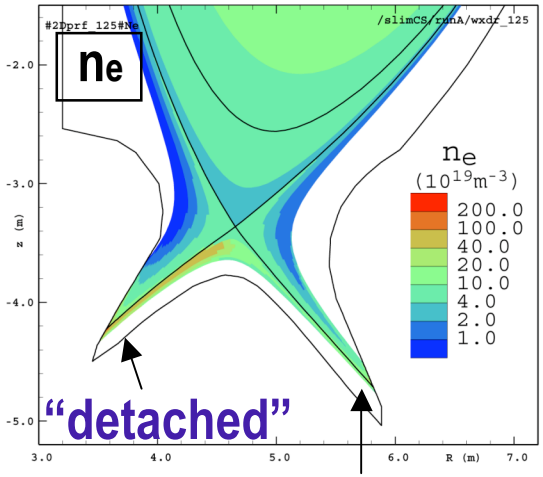

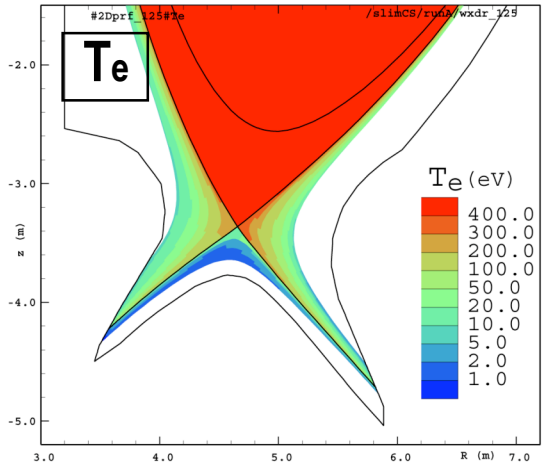

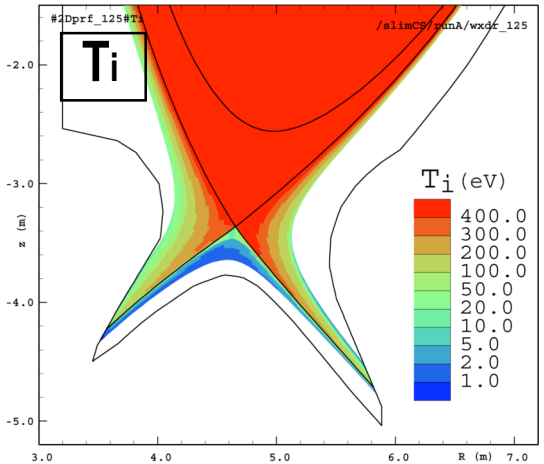

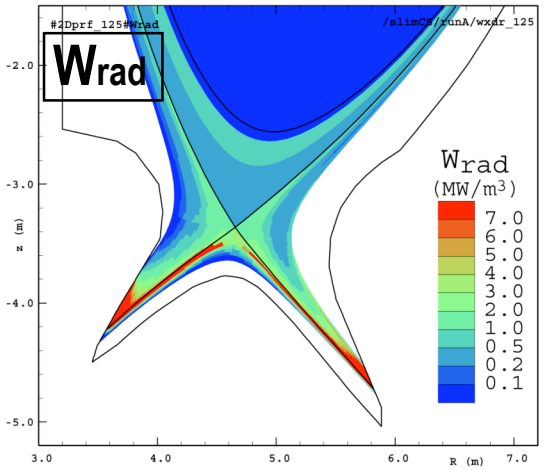

Radiative cooling by conventional divertor is limited

$$\frac{P_{rad}\ (\text{SOL/divertor})}{P_{in}} = 74.5\ \%$$

We need radiation of "~90%" to satisfy the target

Outboard q_{heat} ~ 60 MW/m^2 >> allowance

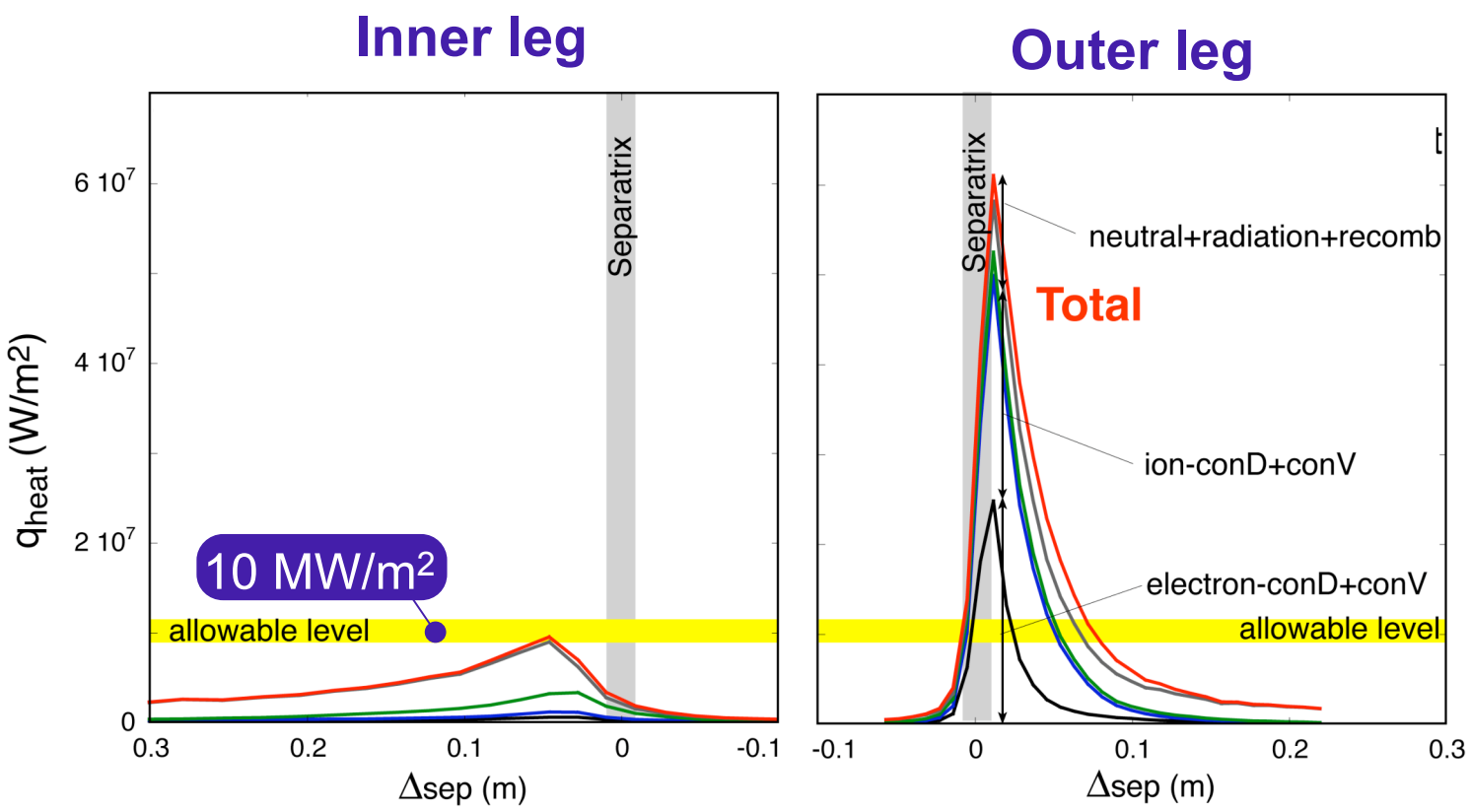

Improvement by V-shaped corner

Original

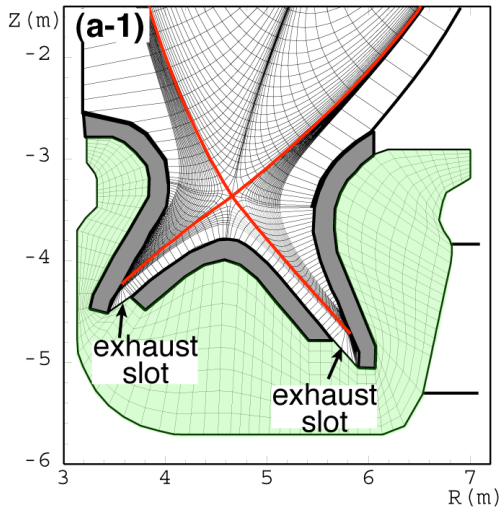

Modified
V-shaped corner

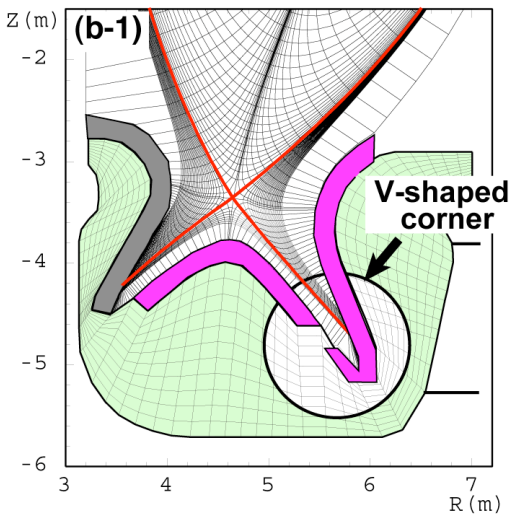

Outer leg

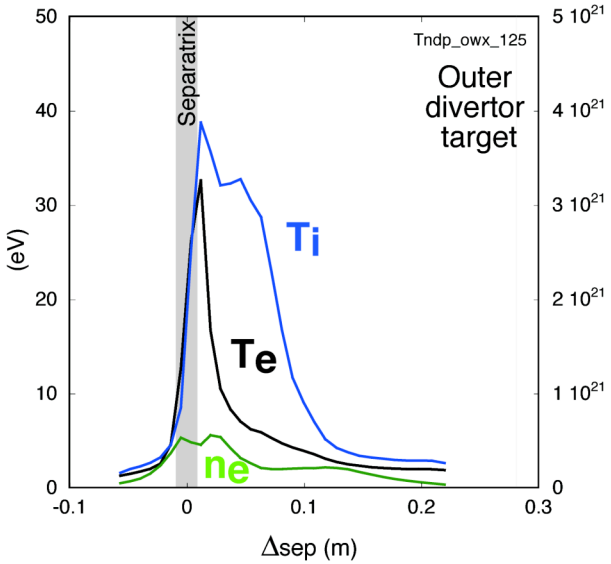

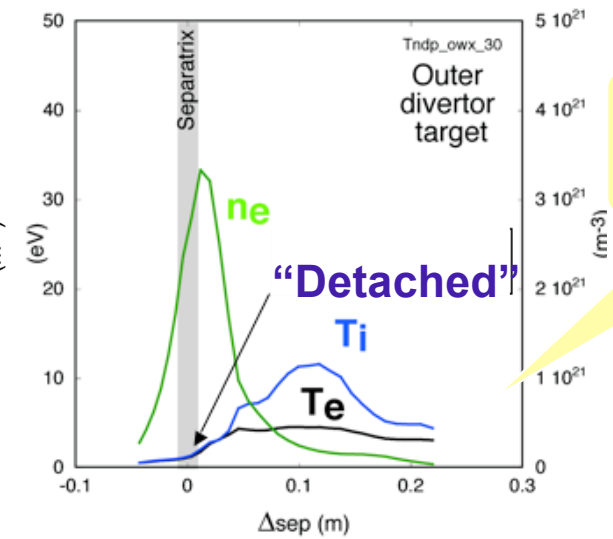

$n_e \sim 3 \times 10^{21}\ m^{-3}$
$T_e \sim 2\ eV$

V-shaped corner shows prospect for <10 MW/m^2

Reduction in q_{heat} by V-shaped corner

Original **Modified**

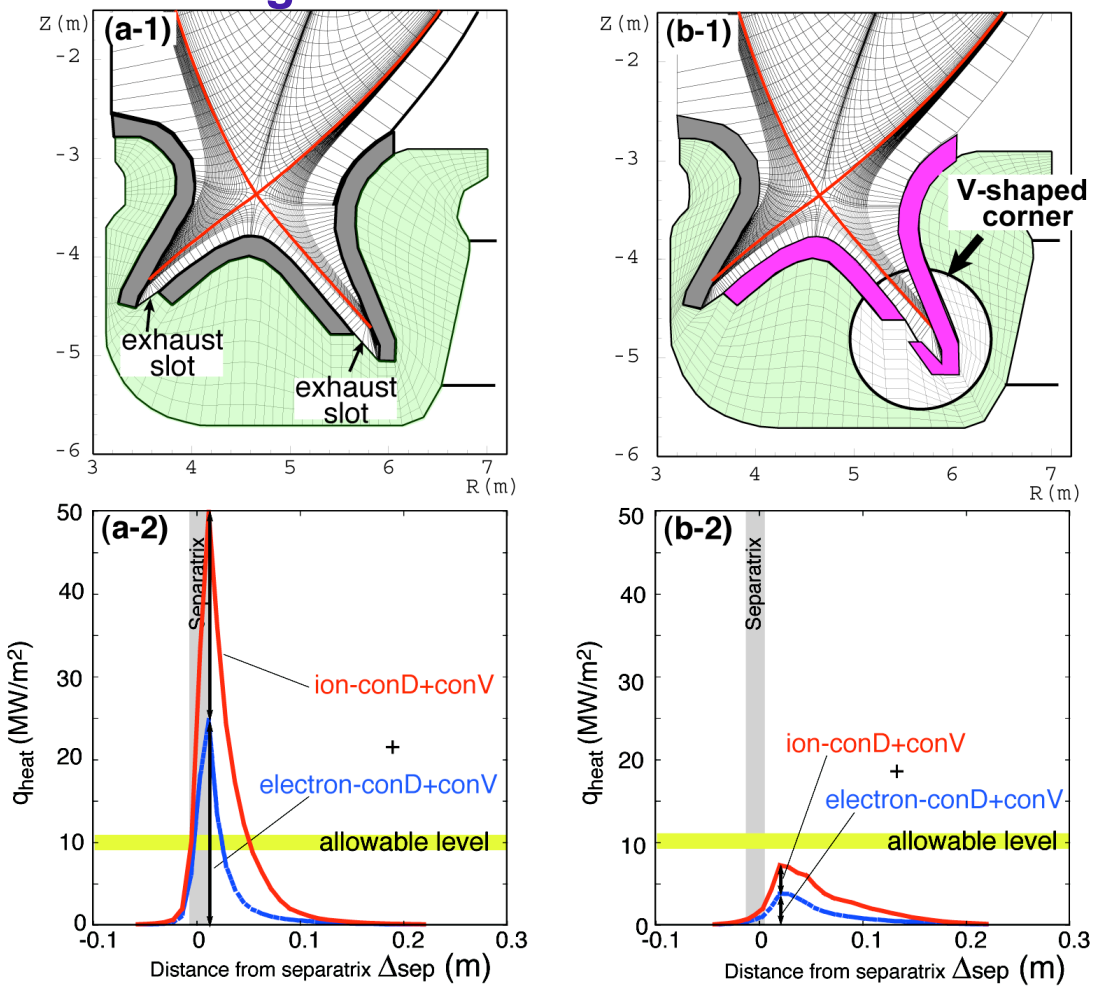

q_{heat} for outer leg

Maintenance scheme

Possible maintenance schemes

- Reduction in N of in-situ cut/reweld of piping, required for high availability
- Each scheme has merits and demerits.
- No schemes have been proven so far! Even in the case of ITER.

In-vessel (module)

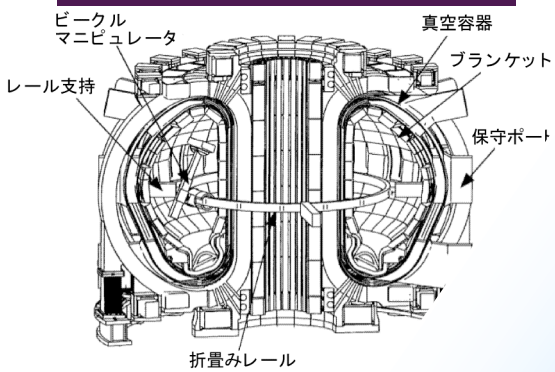

ITER

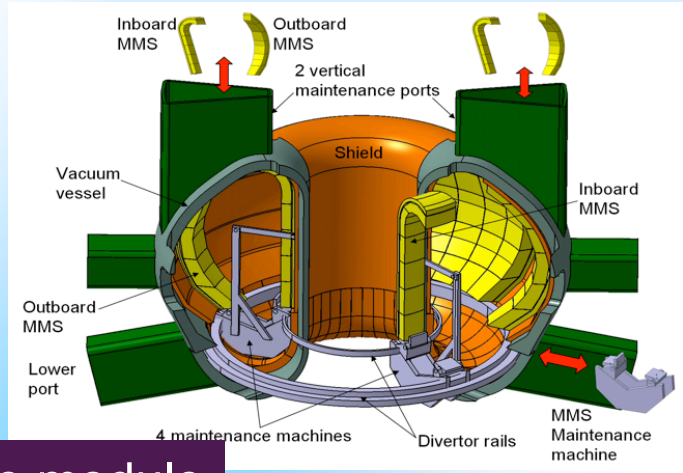

PPCS

Large module

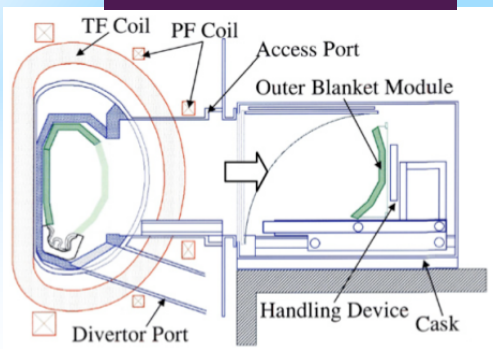

Demo-CREST

Sector

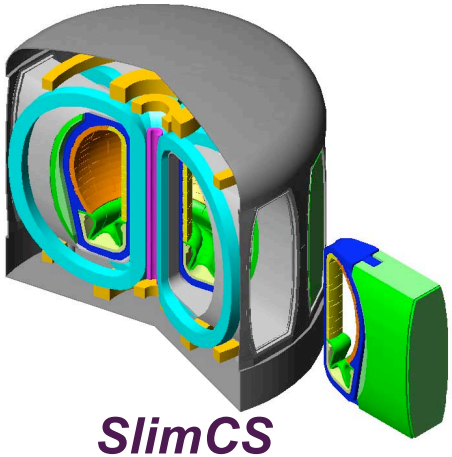

SlimCS

Why we choose “sector transport”

Reason for NOT choosing “in-vessel” maintenance

- ❑ **Difficulty in “front access”**
  — small clamp torque for supporting blanket

Example of ITER

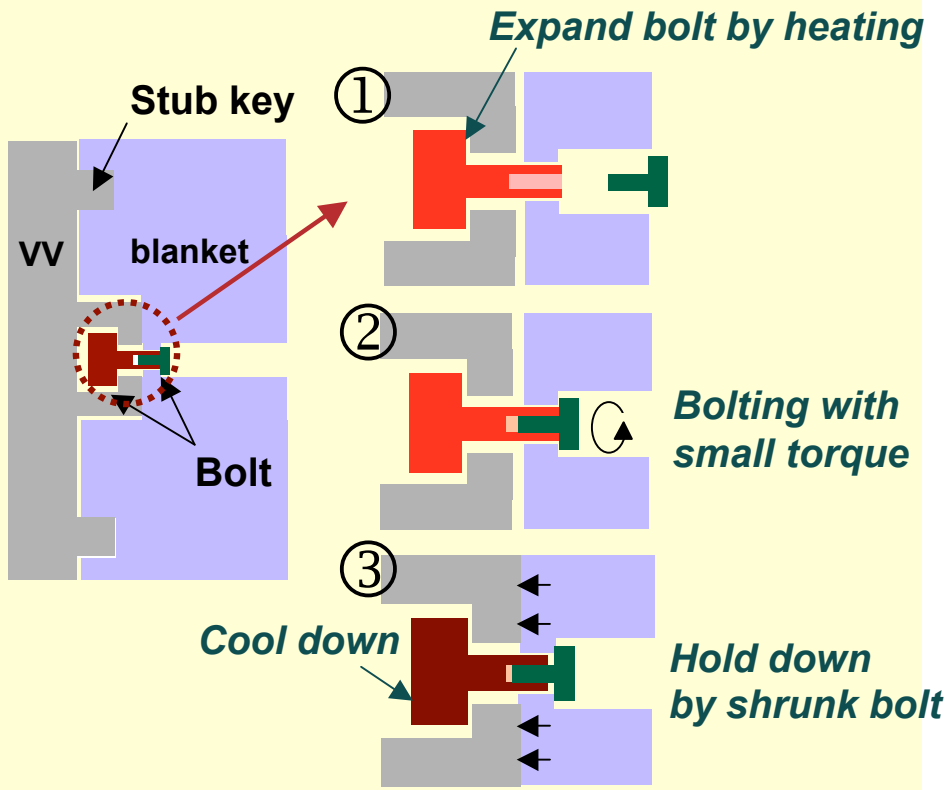

Reason for choosing “sector” maintenance

- ❑ **“Flexible access”**
  - ***Can maintain complex torus configuration***
  - ***Can deal with unexpected troubles***
- ❑ **High availability expected**
  Minimize the number of in-situ cut and re-welding
- ❑ **Flexibility to upgrade blanket**

Torus configuration of SlimCS

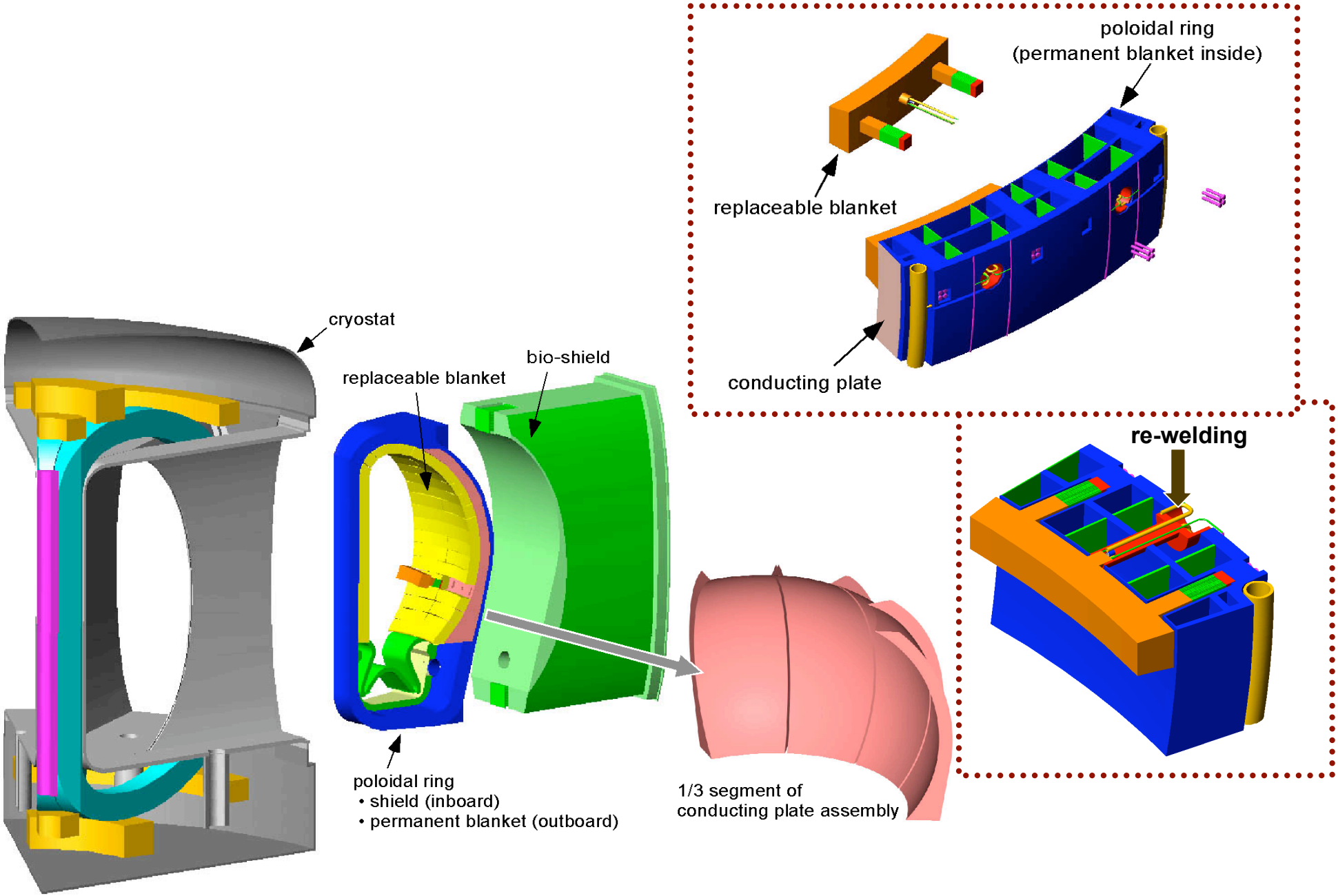

Conducting shell

Requirements for shell

1) Sector-wide ($\tau \geq 50$ ms)

2) $r_w/a \leq 1.3$

3) Fins to cancel harmful component of current (Kameari shell)

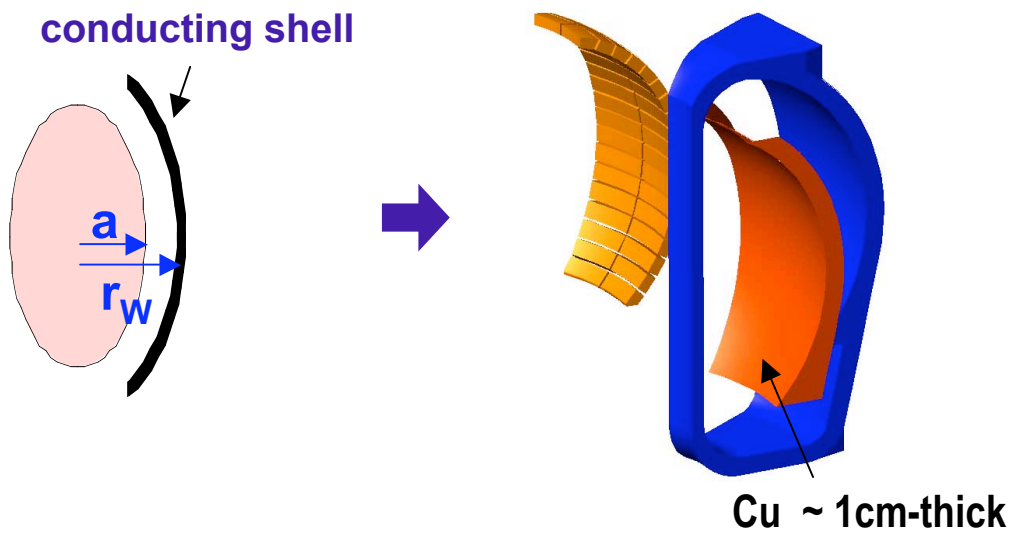

Comparison of shell performance

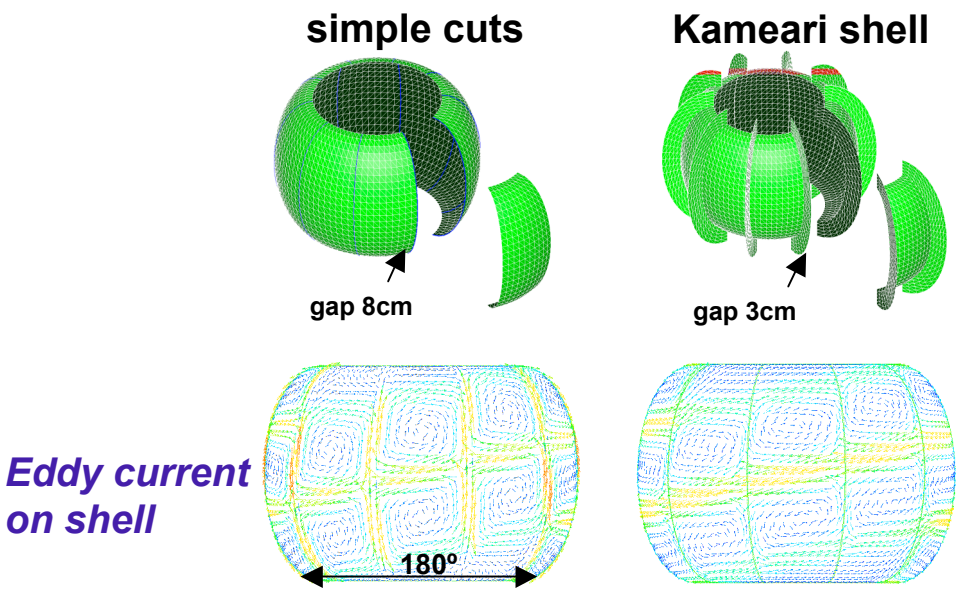

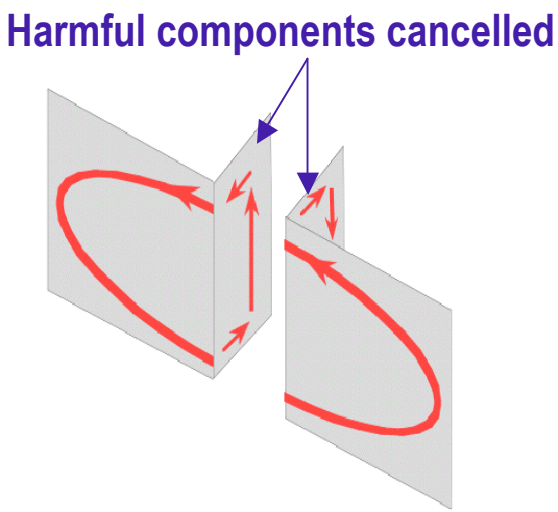

Building of Reactor

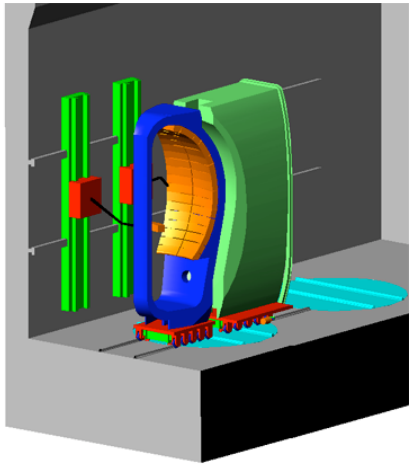

Hot cell

Replace BLK
during plant operation

Decay heat of used blanket
> 1mW/cc (first one year)

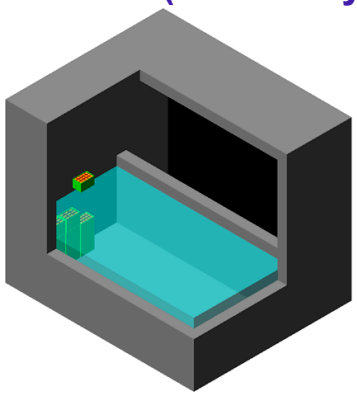

Interim storage

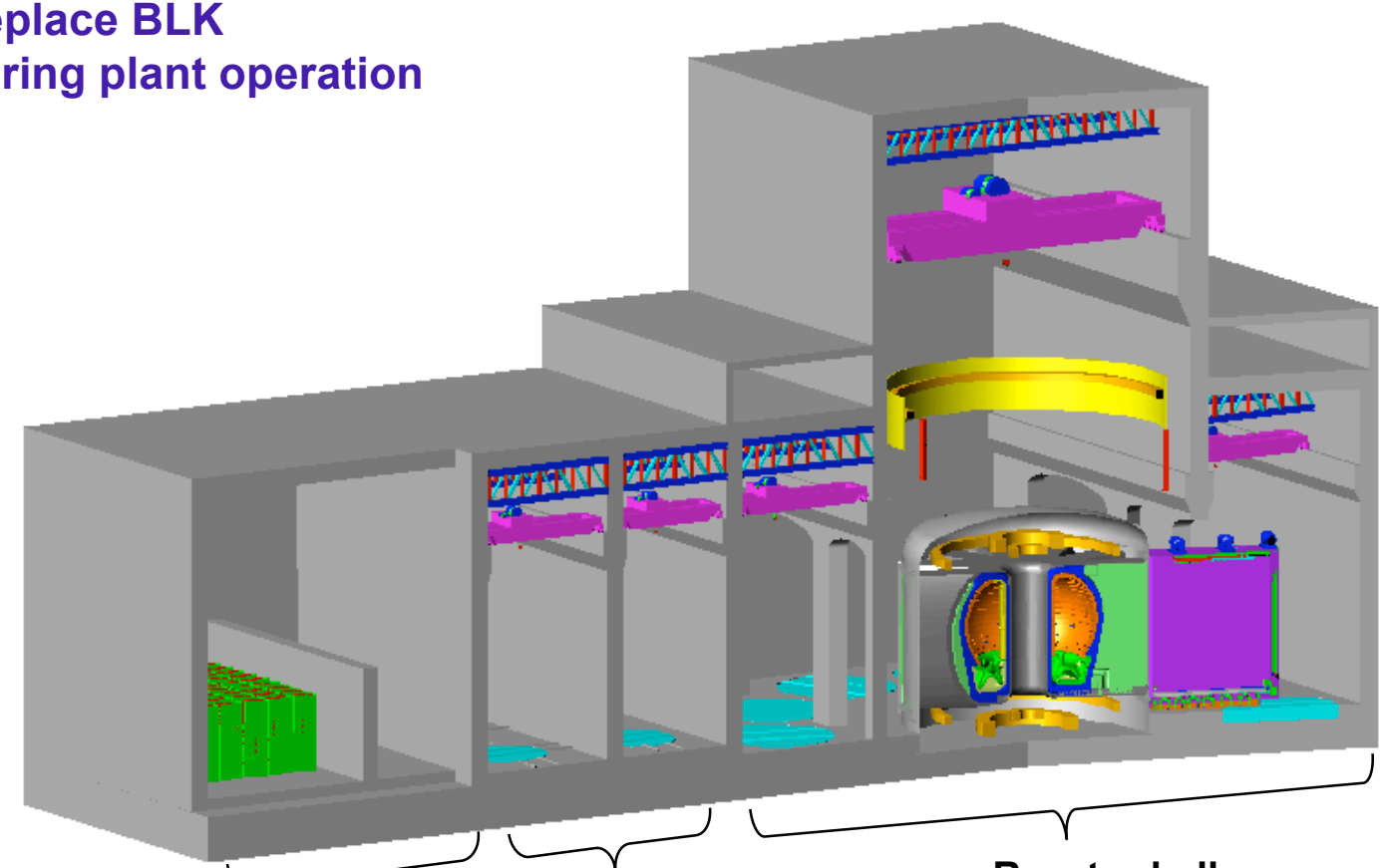

Interim storage

Hot cell

Reactor hall

Sector carrier

Maintenance

Operation

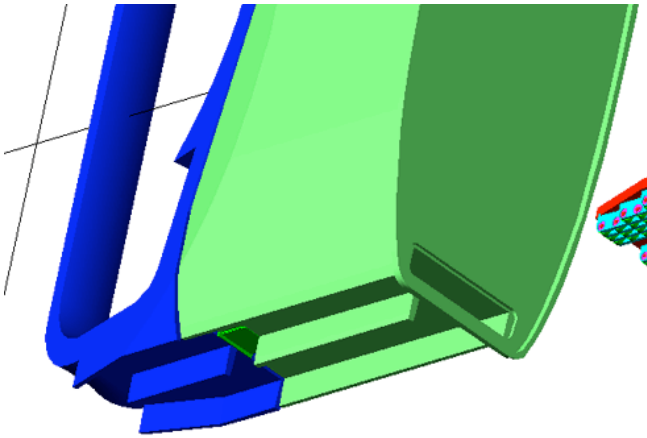

750 tons/sector

Wheel & roller bearing

~1,150 tons conveyable

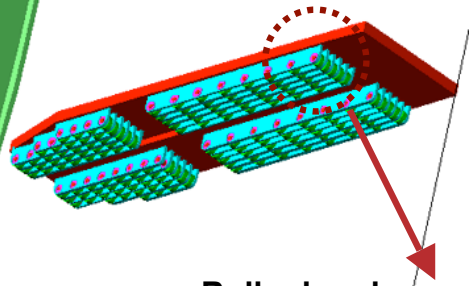

Roller bearing
100 mmϕ

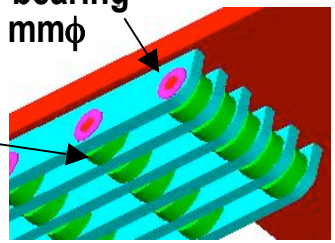

Wheel
300 mmϕ
(148)

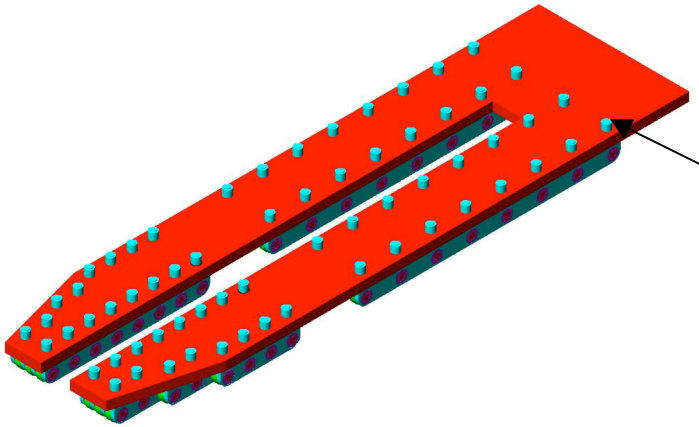

Hydraulic jack (64)
70 tons/jack

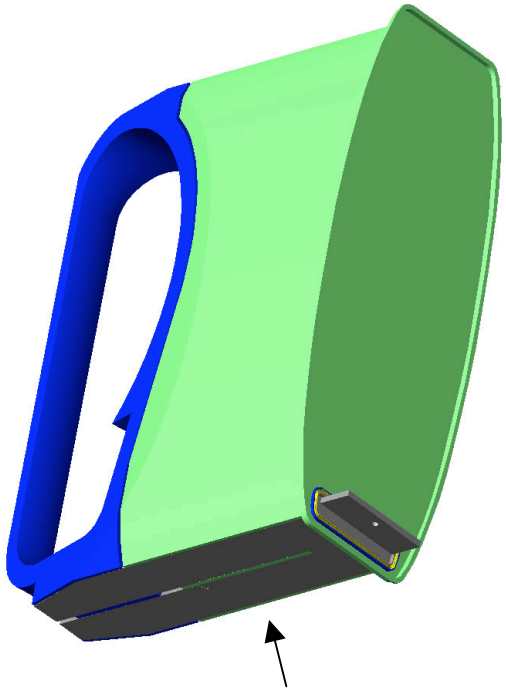

Spacer for shielding

Retracting mechanism

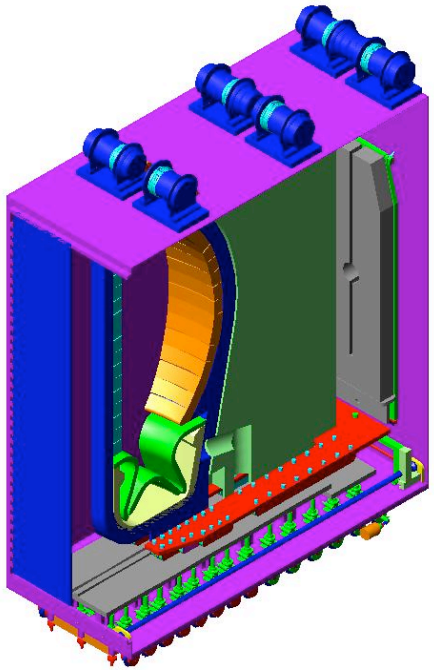

Combination of screw rod & rotating screw nut

➡ **Advantage: No counter balance required**

Use the cryostat basement as fulcrum

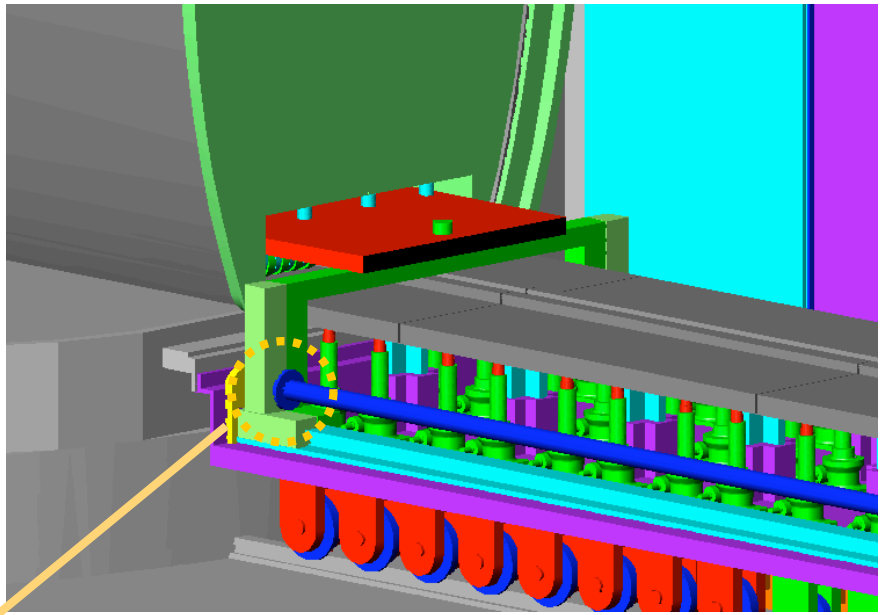

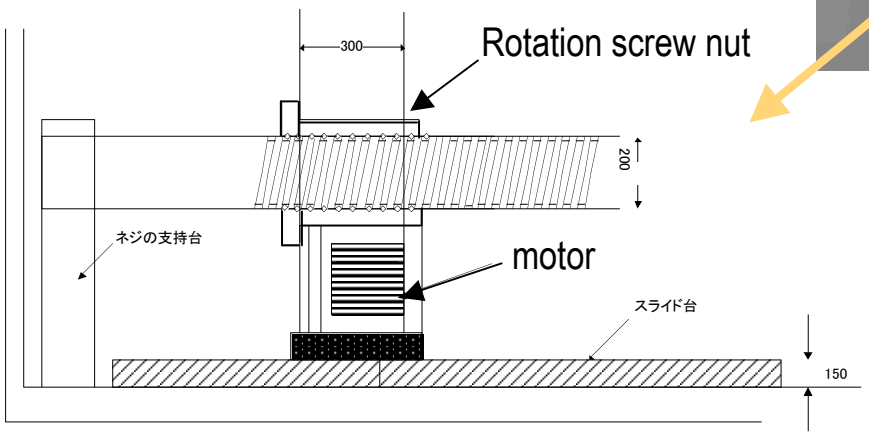

Cask

Functions

1) Two seal doors (French window)
2) Negative pressure control
   a little lower than 1 atm
3) Sector carrier
4) Heat removal system
5) Rectilinear travel only

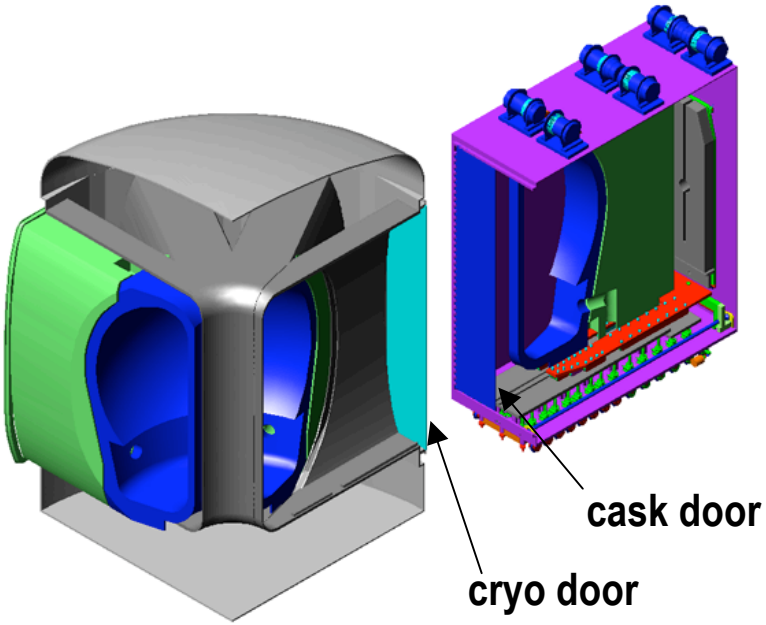

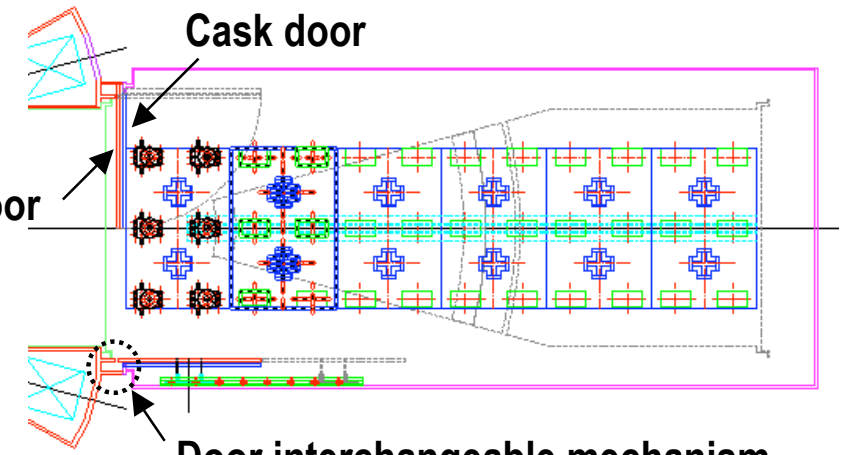

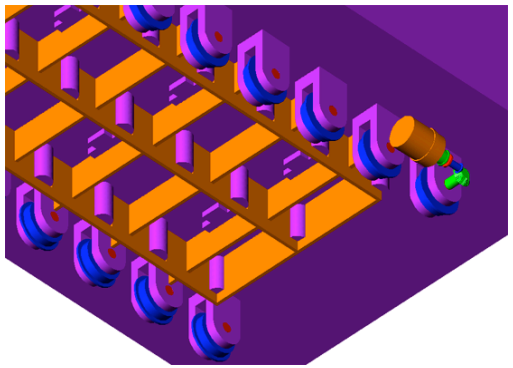

Wheel & roll bearing

Transport of cask

How to minimize the turning radius

- Turn-table scheme (prime)
- Hovering (alternative)

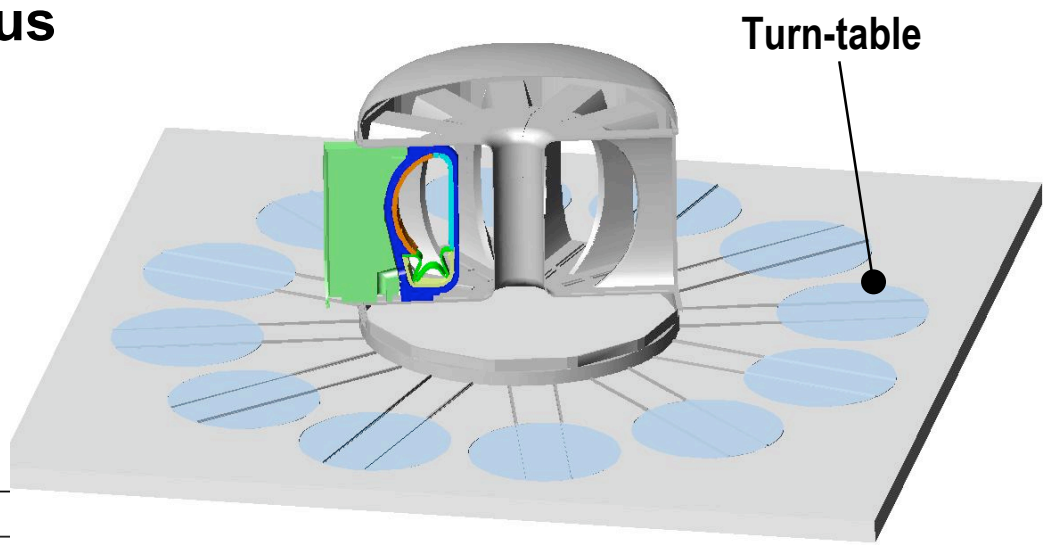

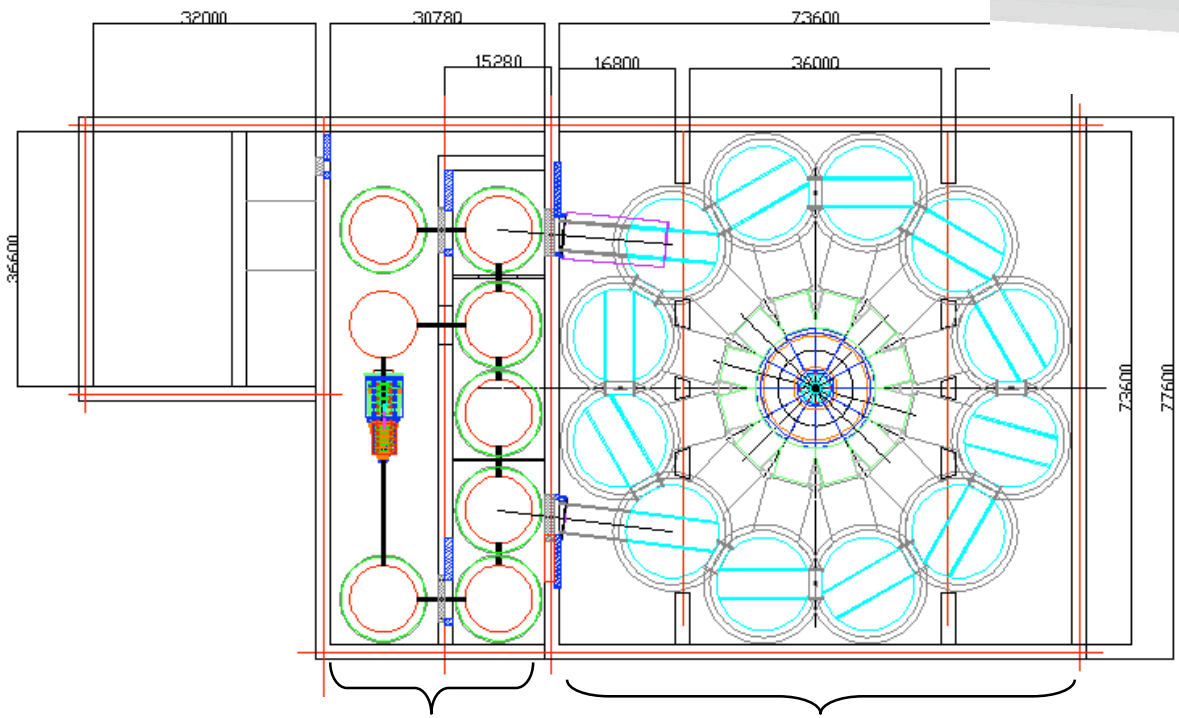

TF coil turnover force

"Large port" for sector maintenance

→ NOT allow to setup inter-coil structure

Similarity to cantilever problem

Turnover force : $w \propto I_{TF} B_v \propto I_{TF} I_p$

Buckling : $\delta \propto w \ell^4$

Large port is problematic!

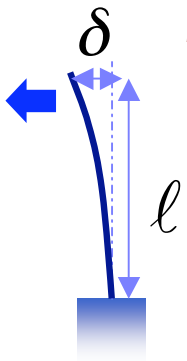

FEM analysis

Turn-over force: 10,000 tons/coil
Displacement: 1.25 m

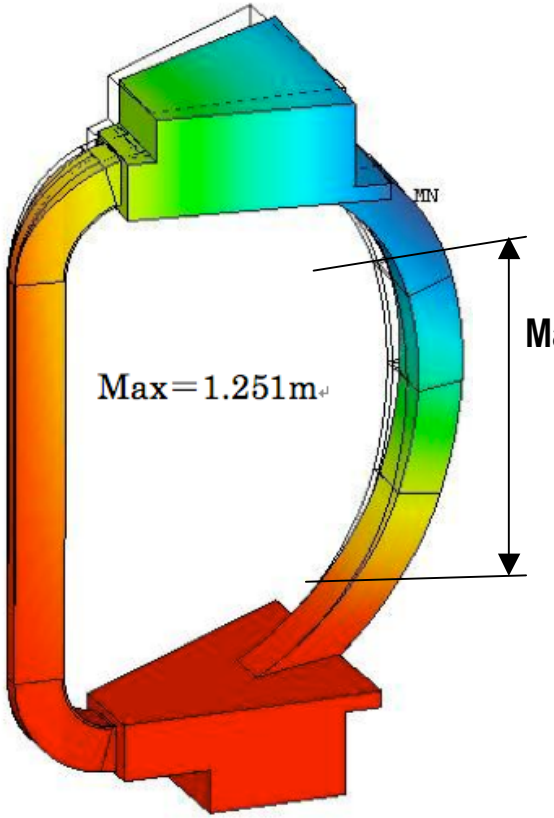

Maintenance port
$\ell = 12m$
(SlimCS)

Support of TF coil turnover force

Support by "tension force"of ropes

- **Easy of length-tuning**
- **Balanced loading**

Concerns

- **torsion of cryostat**
- **Seismic adequacy ?**

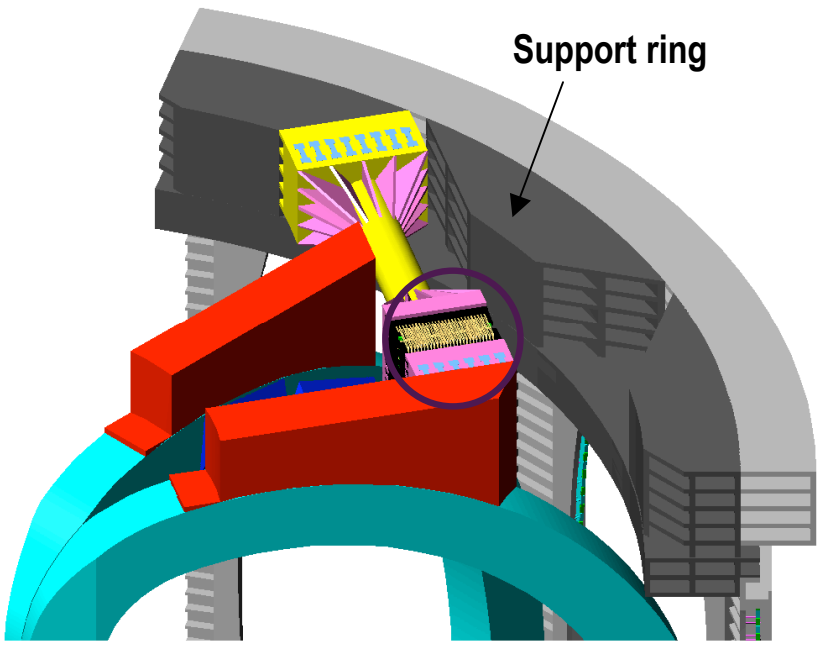

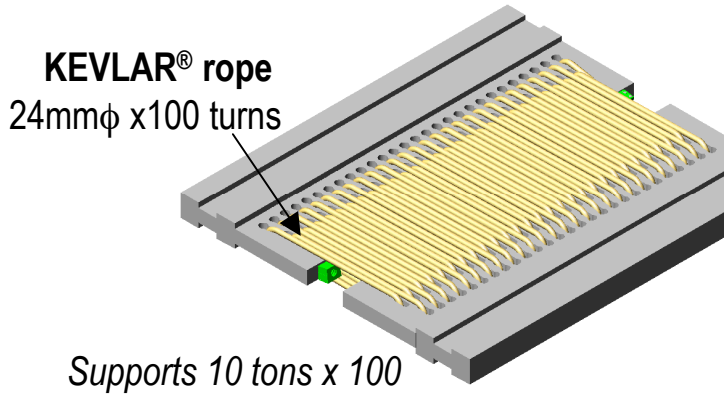

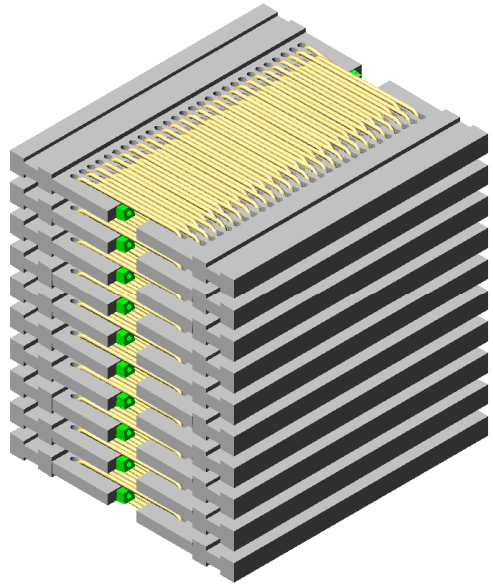

Rope assembly *Supports 10,000 tons*

Future Plan

- Torus configuration
  - Segmentation of blanket to stand EM forces by disruption
  - Assembly/disassembly procedure for remote maintenance
- Revisit design parameters
  - Plasma shaping
  - Magnet
  - CD systems
  - ...

→ Expect contribution to BA

These are "common design issues" in BA