ARIES-CS Power Plant: Final Engineering Results and Findings

Presented by A. R. Raffray (UCSD)

For the ARIES-CS Team

Web site: http://aries.ucsd.edu/ARIES/

Japan-US Workshop on Fusion Power Plants and Related Advanced Technologies with Participation of EU

March 5-7, 2008

UCSD, La Jolla, CA, USA

UC San Diego

Outline

- Design challenges associated with a CS
- Engineering effort to address these challenges
  - Neutron wall load and heat flux
  - Radial build
  - Blanket
  - Integration and Maintenance
  - Coil design and structural analysis
  - Divertor
  - Alpha loss
  - Safety analysis
- Summary

Details in L. El-Guebaly's presentation

The ARIES Team Has Completed the 3-Phase ARIES-CS Study

Phase I: Development of Plasma/coil Configuration Optimization Tool

1. Develop physics requirements and modules (power balance, stability, α confinement, divertor, *etc.)*
2. Develop engineering requirements and constraints through scoping studies.
3. Explore attractive coil topologies.

Phase II: Exploration of Configuration Design Space

1. Physics: β, aspect ratio, number of periods, rotational transform, shear, *etc.*
2. Engineering: configuration optimization through more detailed studies of selected concepts
3. Trade-off studies (systems code)
4. Choose one configuration for detailed design study.

- ***Different configurations considered including NCSX-like 3-field period and MHH2 2-field period configurations***
- ***We focused on the NCSX-like 3-field period for the final system design and optimization***

Phase III: Detailed system design and optimization

Key Stellarator Constraints Impacting the Engineering Design and Performance of the Power Plant

- **Minimum distance between coil and plasma**
- **Neutron wall load and plasma heat flux peaking factors**
- **Space available for maintenance under complex coil configurations**
- **Alpha loss and divertor heat loads**

- **Our goal was to push the design to its limits to help assess the attractiveness of a CS power plant and understand key R&D issues driving the design constraints**
  - **Understanding that some parameters would have to be relaxed to increase margin**

Parameters for Power Plant Based on NCSX Like 3-Field Period Configuration

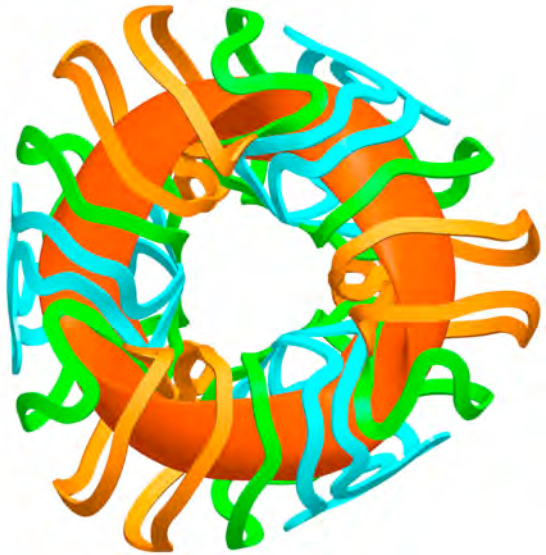

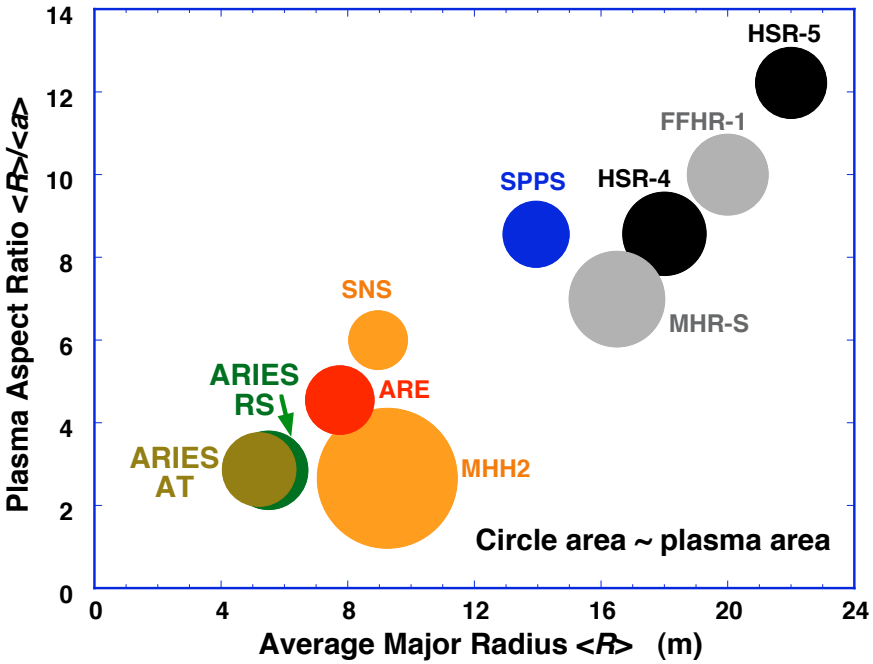

Min. coil-plasma distance (m)	1.3
Major radius (m)	7.75
Minor radius (m)	1.7
Aspect ratio	4.5
β (%)	6.4
Number of coils	18
B_o (T)	5.7
B_{max} (T)	15.1
Fusion power (GW)	2.4
Avg./max. wall load (MW/m^2)	2.6/5.3
Avg./max. plasma q'' (MW/m^2)	0.58/0.76
Alpha loss (%)	~5

UC San Diego

Blanket

Blanket Selection Based on Scoping Studies of a Number of Concepts

1. **Dual Coolant concept with a self-cooled Pb-17Li zone and He-cooled RAFS structure.**
   - He cooling needed for ARIES-CS divertor
   - Additional use of this coolant for the FW/structure of blankets facilitates pre-heating of blankets, serves as guard heating, and provides independent and redundant afterheat removal.
   - Generally good combination of design simplicity and performance.
   - Build on previous effort, further evolve and optimize for ARIES-CS configuration
     - Originally developed for ARIES-ST
     - Further developed by EU (FZK)
     - Presently considered as US ITER blanket test module

2. **Self-cooled Pb-17Li blanket with SiC_f/SiC composite as structural material.**
   - More compact design (no He), higher efficiency, more attractive safety features (LSA=1), and lower COE.
   - Desire to maintain this higher pay-off, higher development risk option as alternate to assess the potential of a CS with an advanced blanket

Dual Coolant Blanket Module Redesigned for Simpler More Effective Coolant Routing

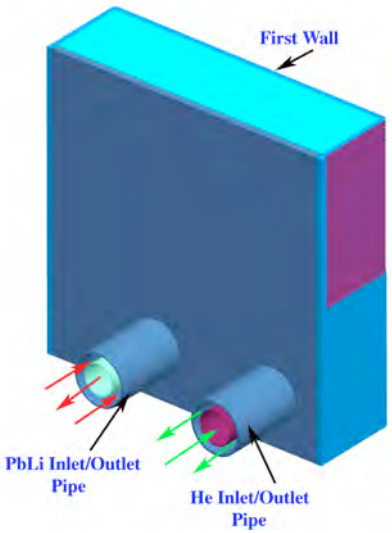

- 10 MPa He to cool FW toroidally and box
- Slow flowing (<10 cm/s) Pb-17Li in inner channels
- RAFS everywhere (T_{max}<550°C)
- Additional layer of ODS-FS on FW (T_{max}<700°C)

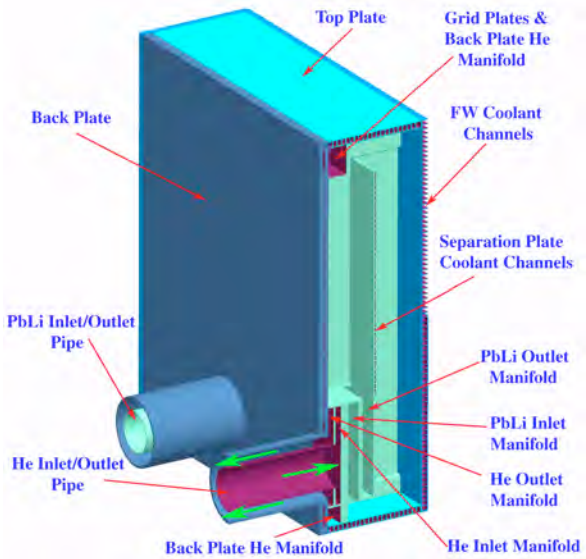

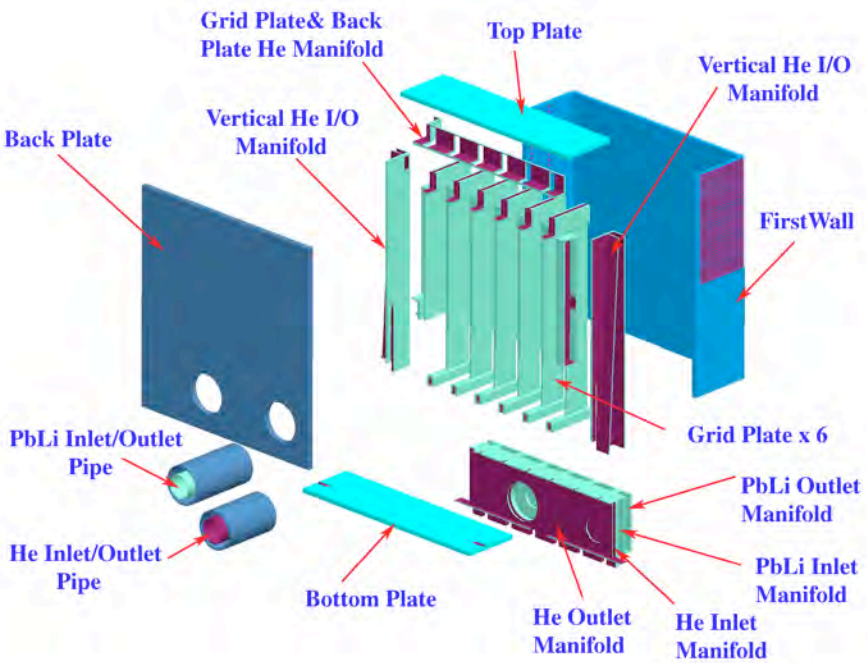

- SiC insulator lining Pb-17 Li channel for thermal and electrical insulation to maximize $T_{Pb\text{-}17\,Li}$ and minimize MHD ΔP while accommodating compatibility limit $T_{FS/Pb\text{-}17Li}$ <500°C

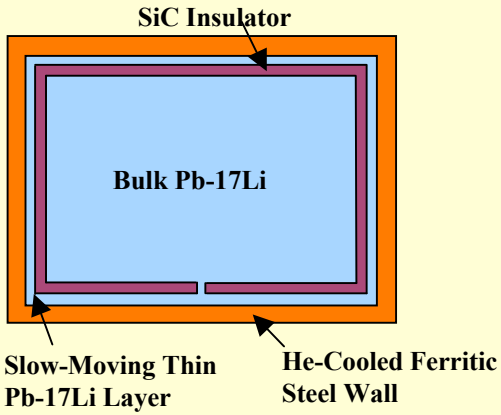

Coolant Routing Through HX Coupling Blanket and Divertor to Brayton Cycle

- Min. ΔT_{HX} = 30°C
- $P_{Friction} \sim \eta_{pump} \times P_{pump}$

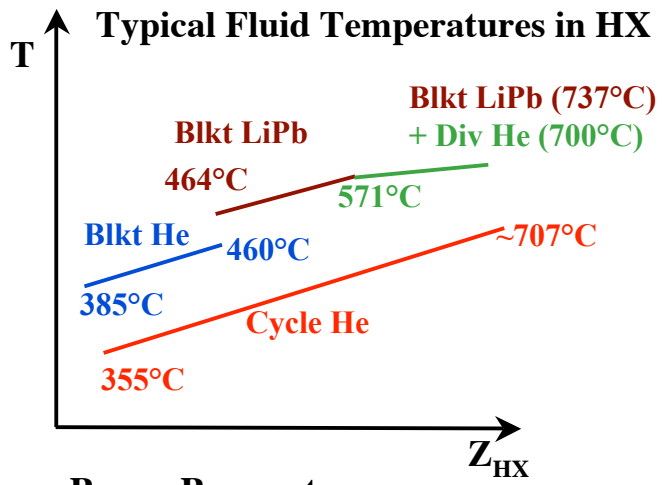

Power Parameters

Fusion Thermal Power in Reactor Core	2650 MW
Friction Thermal Power in Blkt/Div He	140/25 MW
Power Removed by Pb-17Li	1440 MW
Power Removed by Blanket He	1190 MW
Power Removed by Divertor He	185 MW
Total Thermal Power	2815 MW
Brayton cycle efficiency	0.43

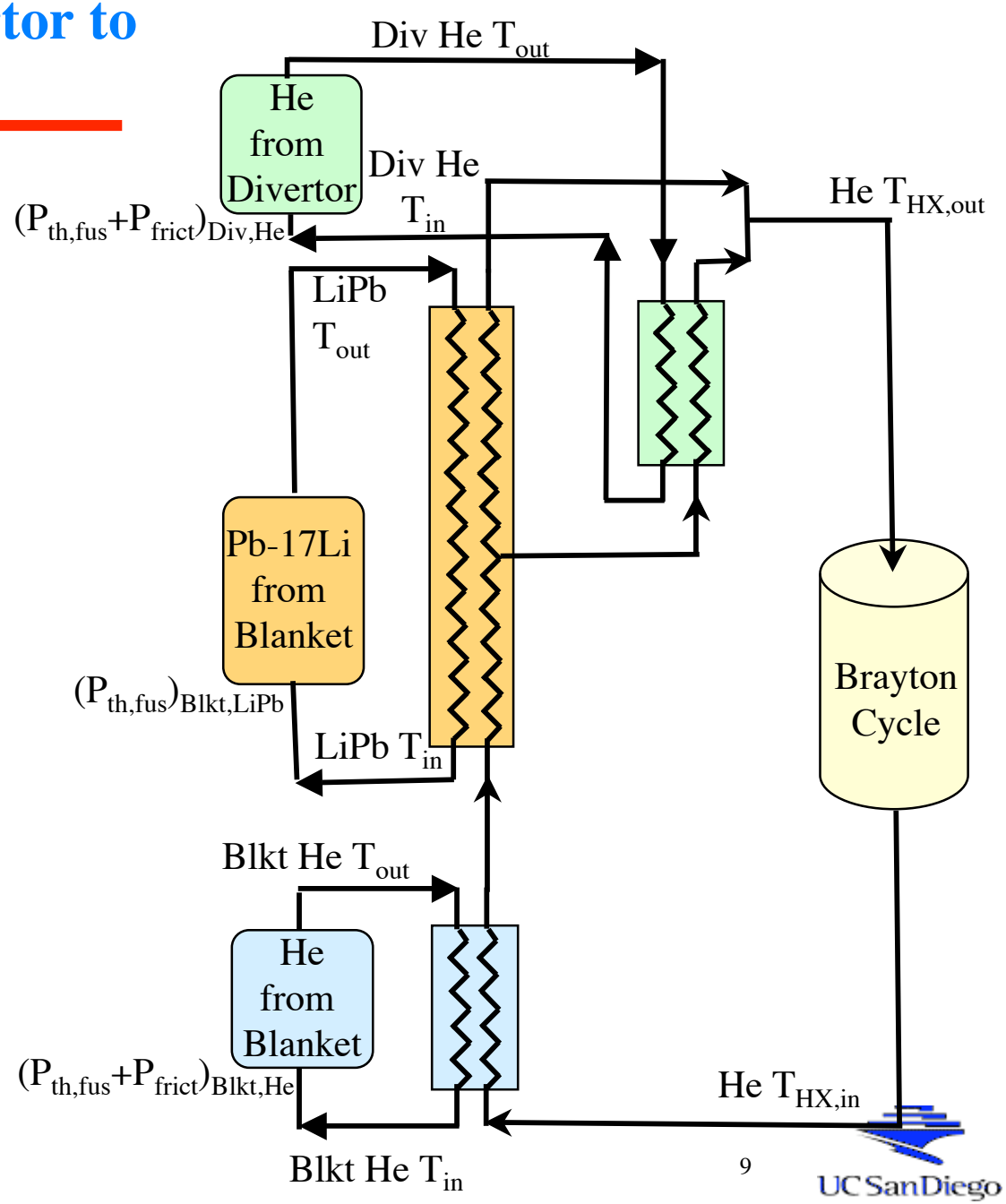

Optimization of DC Blanket Coupled to Brayton Cycle Assuming a FS/Pb-17Li Compatibility Limit of 500°C and ODS FS for FW

- RAFS T_{max} < 550°C; ODS T_{max} <700°C
- The optimization was done by considering the net efficiency of the Brayton cycle for an example 1000 MWe case.
  - 3-stage compression + 2 inter-coolers and a single stage expansion
  - $\eta_{Turbine}$ = 0.93; $\eta_{Compressor}$ = 0.89; $\varepsilon_{Recuperator}$ = 0.95; Total comp. ratio < 3.5

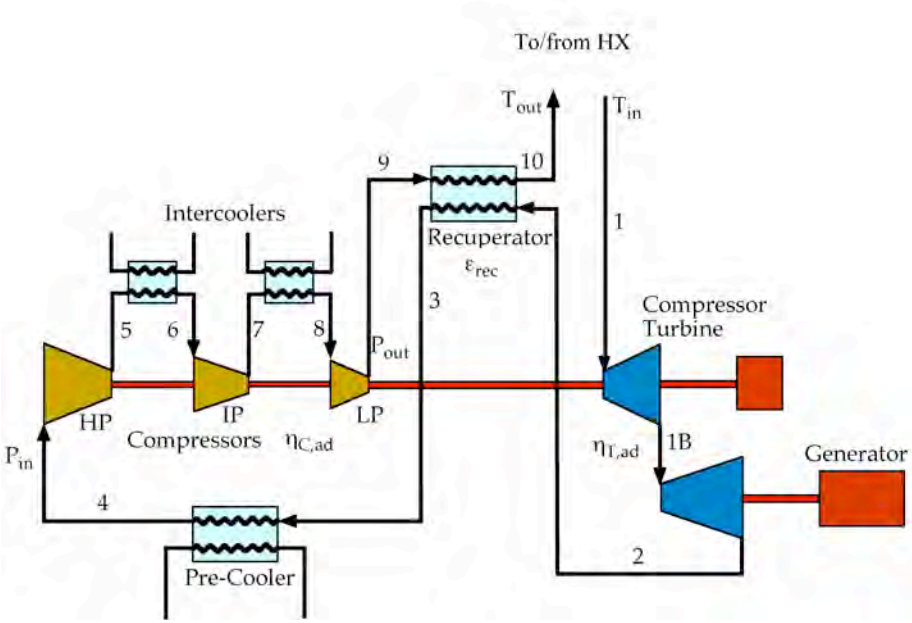

Pumping Power and Efficiency as a function of Power Density

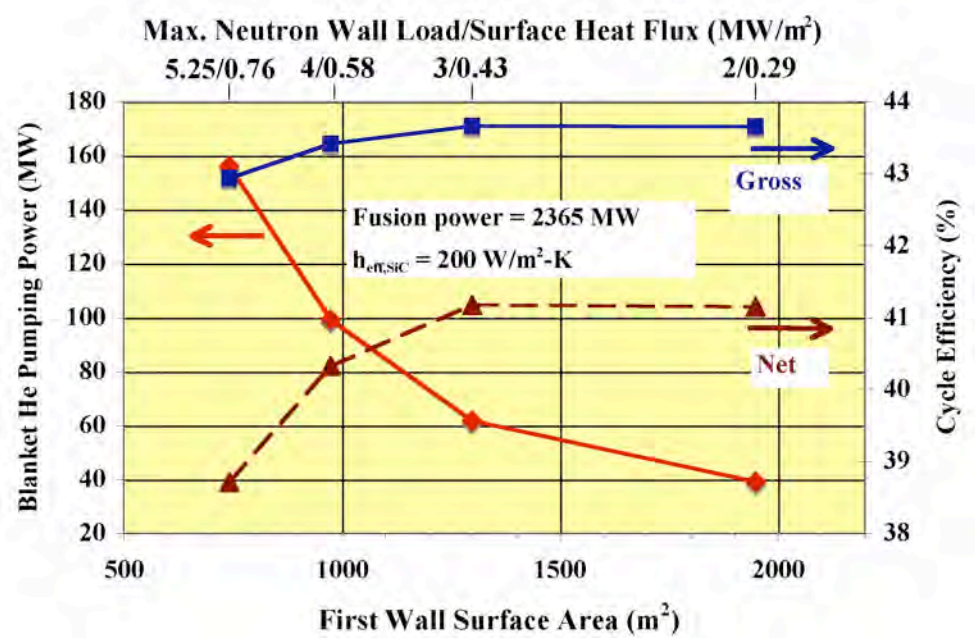

UC San Diego

Challenging to Design Blanket FW/Module Within Stress Limits for High Heat Flux and Neutron Wall Load Location

Alloy	T (˚C)	S_m (MPa)	3 S_m (MPa)
F-82H	500	133	399
	550	118	354
	600	101	303
ODS LAF-3	500	268	804
	650	133	399
	700	111	333
ODS 12YWT	500	≤500	≤1500
	550	≤460	≤1380
	600	≤420	≤1260
	650	≤220	≤660
	700	≤210	≤630
	750	≤170	≤510
	800	≤155	≤465

q'' (MW/m^2)	0.5	0.76	0.76	0.76	0.76
NWL (MW/m^2)	2.6	2.6	2.6	2.6	5.2
Ref. T (°C)	369	369	369	432	369
He P (MPa)	10	10	0	10	10
Max. temp. of ODS-FS (°C)					~644
Max. stress in ODS-FS (MPa) (Plane strain)	487	635	590	533	667
Max. stress in ODS-FS (MPa) (Plane stress)	449	458	307	458	
Max. temp. of RAFS (°C)					~560
Max. stress in RAFS (MPa) (Plane strain)		~350			~390

- Design for: $\sigma_{secondary} + \sigma_{primary} < 3\ S_m$
- Use 3-mm layer of ODS FS on 1-mm RAFS layer for FW design to help maximize operating temperature and cycle efficiency.
- Max. NWL and q'' could be reduced by moving wall back if needed.

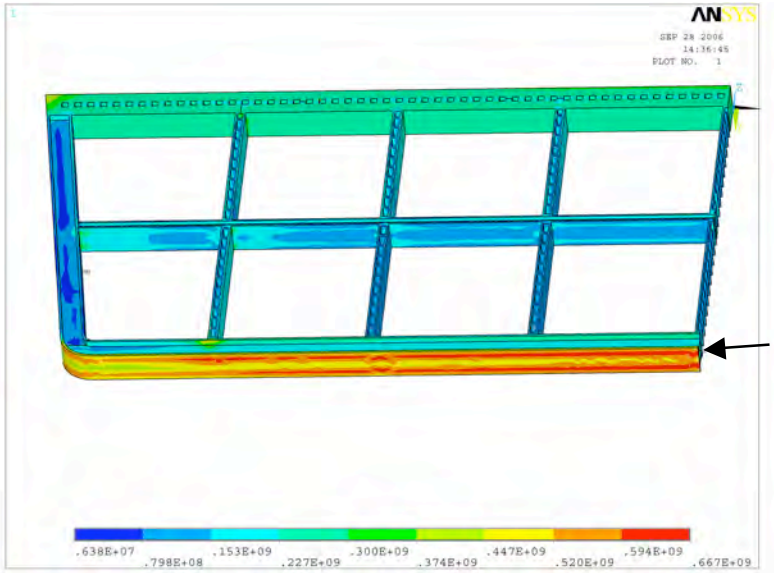

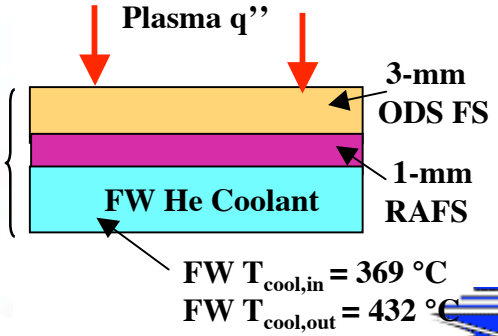

Maintenance Scheme and Integration

Port-Based Maintenance Chosen

(suited for both 2-field and 3-field period configurations)

- **Two dedicated ports per field period**
  - **4 m high by 1.8 m wide at 0° and ~2 m^2 at 35° (also used for ECH)**
  - **Modular design of blanket (~2 m x ~2m x ~0.63 m) and divertor plates (~ 3 m x ~1m x ~0.2 m) compatible with maintenance scheme.**
- **Vacuum Vessel Internal to the Coils**
  - **For blanket maintenance, no disassembling and re-welding of VV required and modular coils kept at cryogenic temperatures.**
  - **Closing plug used in access port.**
  - **Articulated booms utilized to remove and replace 198 blanket modules and 24 divertor modules (max. combined weight ~5000 kg).**

Bird's eye view of 3 field-period configuration showing location of ports

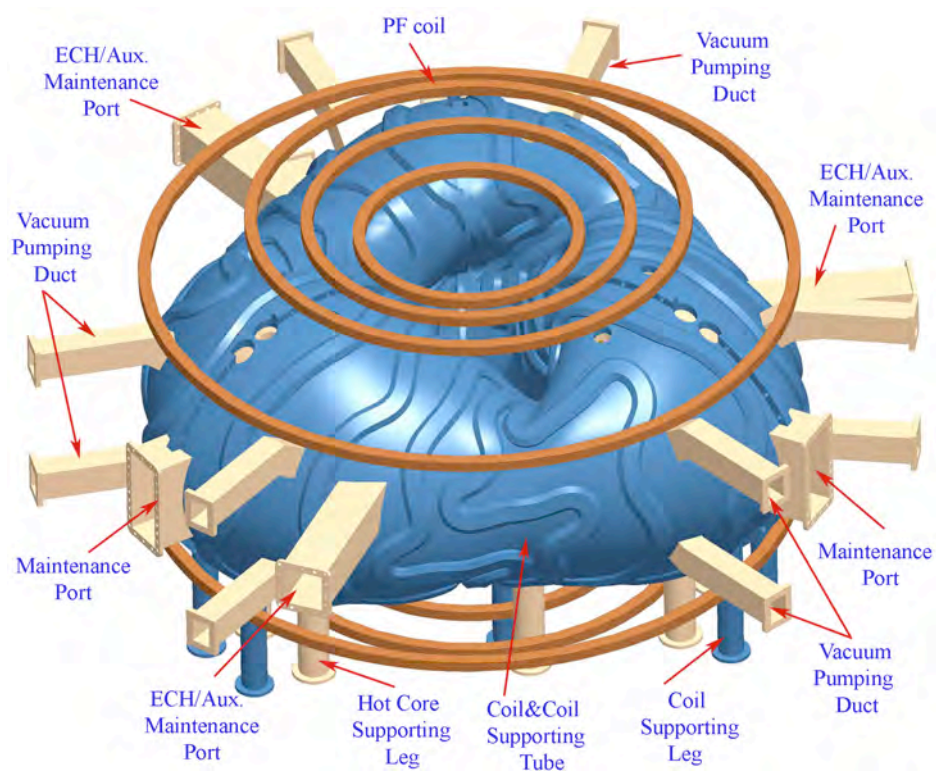

A Key Aim of the Design is to Minimize Thermal Stresses

- Hot core (including shield and manifold) (~450°C) as part of strong skeleton ring (continuous poloidally, divided toroidally in sectors) separated from cooler vacuum vessel (~180°C) to minimize thermal stresses.
- Concentric coolant access pipes for both He and Pb-17Li, with return He in annulus (at ~460°C) and inlet Pb-17Li in annulus (at ~460°C) to maintain near uniform temperature in skeleton ring.
- Each skeleton ring sector rests on sliding bearings at the bottom of the VV and can freely expand relative to the VV.
- Blanket modules are mechanically attached to this ring and can float with it relatively to the VV.
- Bellows are used between VV and the coolant access pipes at the penetrations. These bellows provide a seal between the VV and cryostat atmospheres, and only see minimal pressure difference.
- Temperature variations in blanket module minimized by cooling the steel structure with He (with $\Delta T<100°C$).

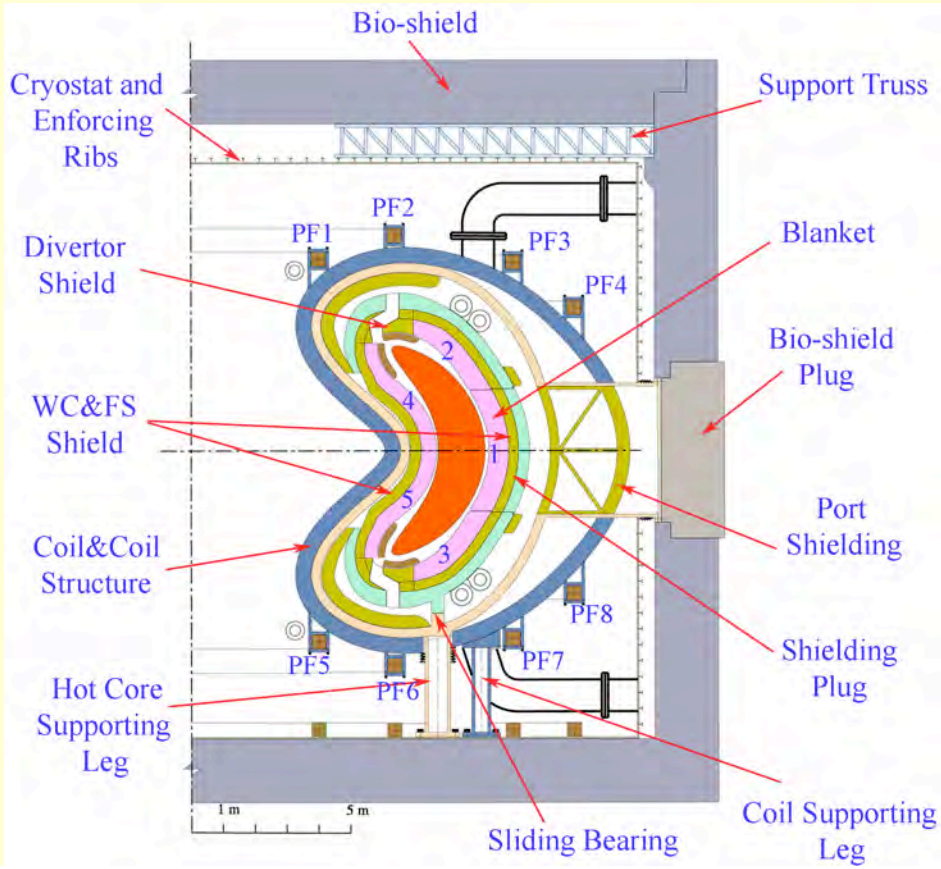

Coil Configuration and Structural Design & Analysis

Desirable Plasma Configuration should be Produced by Practical Coils with "Low" Complexity

- Complex 3-D geometry introduces severe engineering constraints:
  - Distance between plasma and coil
  - Maximum coil bend radius
  - Coil support
  - Assembly and maintenance
- Superconductor: Nb_3Sn wind-and-react Cable-in-Conduit Conductor, wound on preformed structure ($B \leq 16T$)
- Coil structure
  - JK2LB (Japanese austenitic steel chosen for ITER Central Solenoid)
  - Similar coefficient of expansion as SC, resulting in reduced SC strain
  - Relieve stress corrosion concern associated with Incoloy 908 (in the presence oxygen during heat treatment)
  - Attractive environmental feature
  - Potentially lower cost
  - YS/UTS @4K similar to Incoloy 908 (1420/1690 MPa)
  - Need more weld characterization data

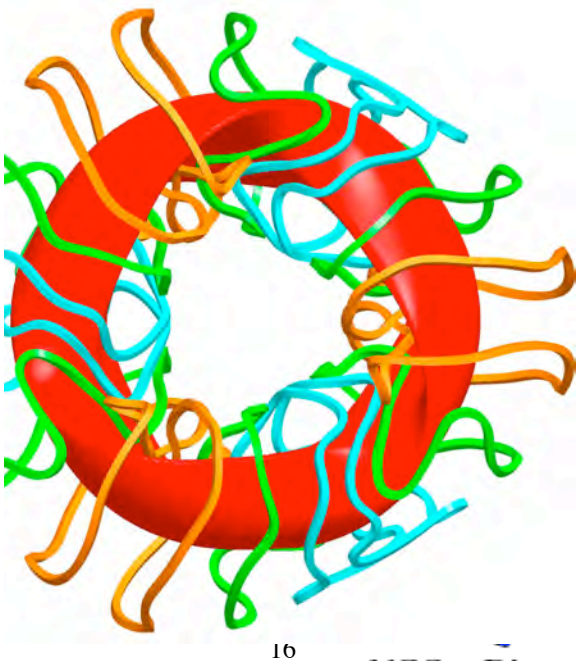

Coil Support Design Includes Winding of All Coils of One Field-Period on a Supporting Tubular Structure

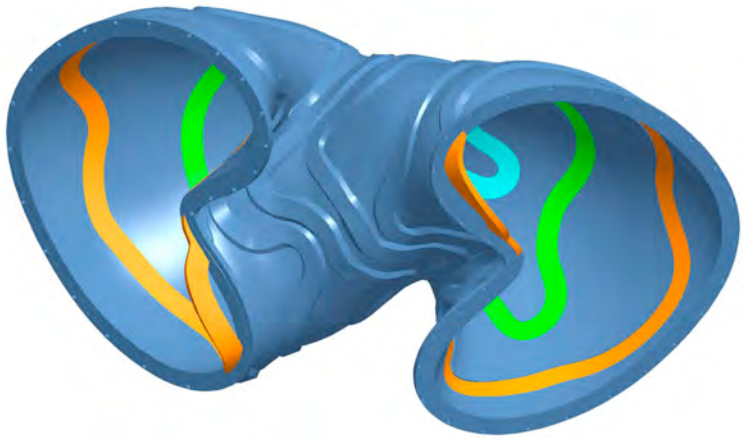

- Winding internal to structure.
- Entire coil system enclosed in a common cryostat.
- Coil structure designed to accommodate the forces on the coil

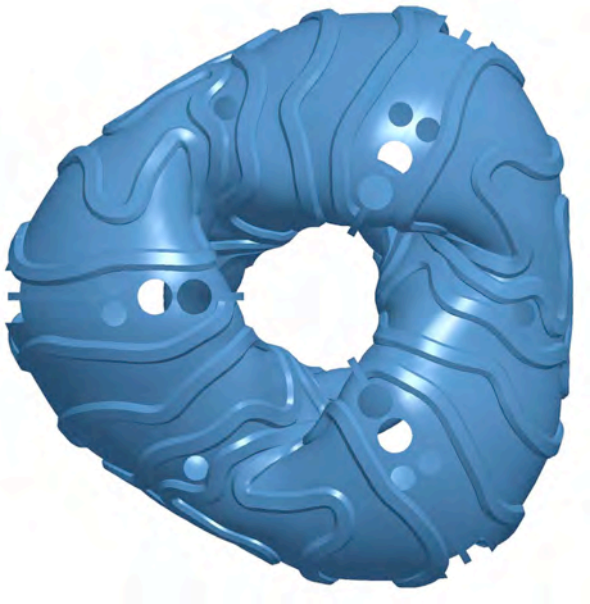

- Large centering forces pulling each coil towards the center of the torus. → Reacted by connecting coil structure together (hoop stress)
- Out-of plane forces acting between neighboring coils inside a field period. → Reacted inside the field-period of the supporting tube.
- Weight of the cold coil system. → Transferred to foundation by ~3 legs per field-period. Legs are long enough to keep the heat ingress into the cold system within a tolerable limit.
- Absence of disruptions reduces demand on coil structure.

Detailed EM and Stress Analysis Performed with ANSYS

- **Shell model used for trade-off studies**

- **Selected cases with 3-D solid model done for comparison to help better understand accuracy of shell model and effect of penetration**

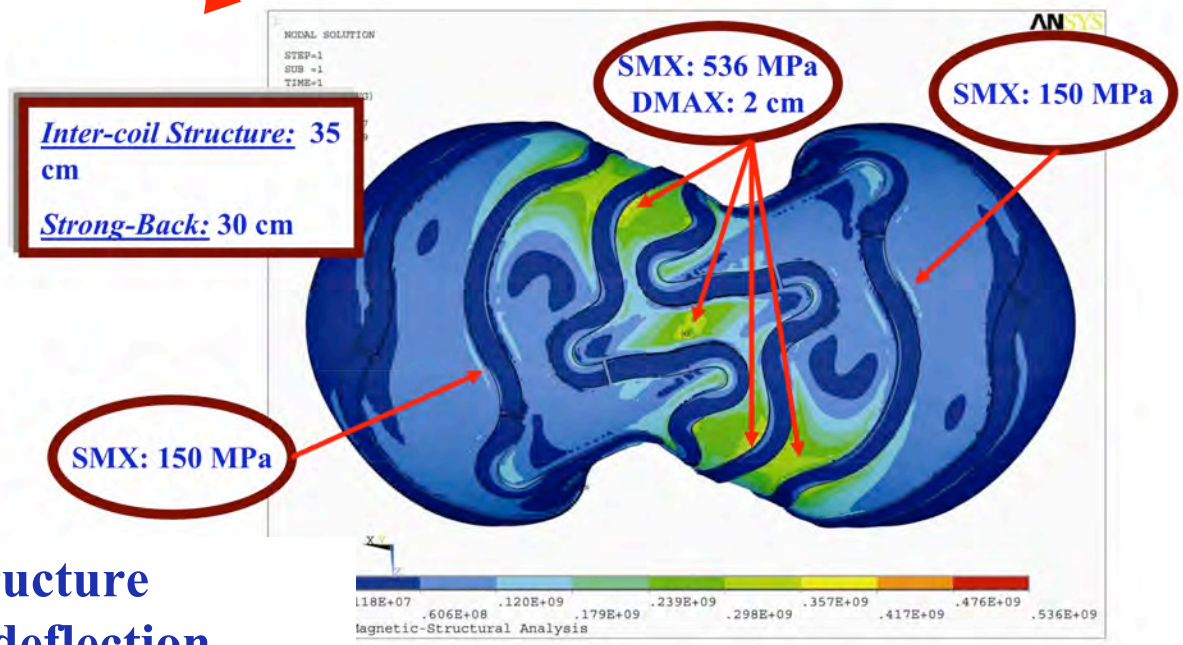

- **As a first-order estimate, structure thickness scaled to stress & deflection results to reduce required material and cost; e.g. in this case:**
  - **Avg. thickness inter-coil structure ~20 cm**
  - **Avg. thickness of coil strong-back ~28 cm**

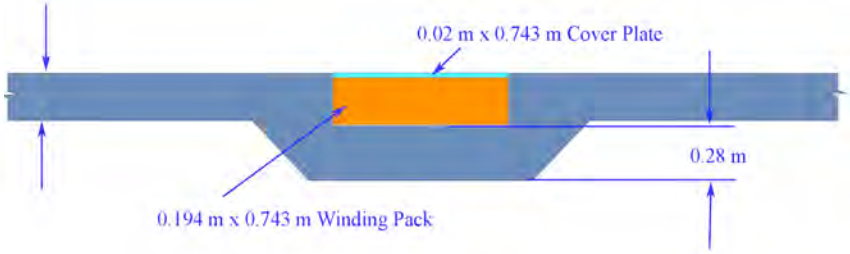

Divertor Design

Divertor Physics Study for 3-FP ARIES-CS

- **Physics modeling challenging due to complex 3-D stellarator geometry.**

- **In anticipation of the final physics results, we proceeded with the engineering design based on an assumed maximum heat flux of 10 MW/m^2.**

- **Limited analysis performed toward the end of the study based on field line tracing but not fully optimized due to lack of time and resources.**
  - **4 plates per field period with ~7% surface coverage fraction**
  - **Radiation loss fraction in core = 75%; in SOL=75%**
  - **Peak thermal heat flux ~ 13 MW/m^2**
  - **Including 5% alpha power loss fraction further increases the load to ~18 MW/m^2**

- **Optimization to reduce peak heat load would include:**
  - **Optimization of plasma operating parameters**
  - **Optimization of magnetic topology to reduce core ripple and alpha loss**
  - **Careful tailoring of divertor plates to reduce peaking factor and peak heat load**

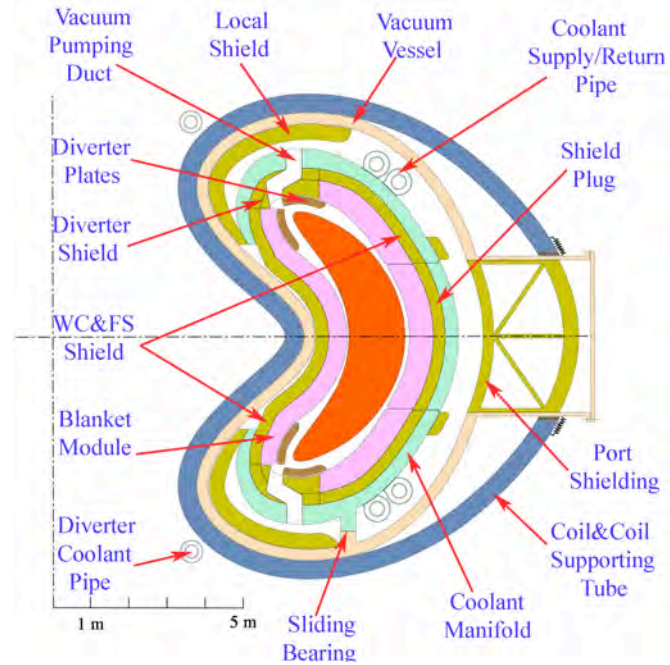

(+) : $0^o \le \phi \le 25^o$
(-) : $-25^o \le \phi < 0^o$ or $95^o \le \phi < 120^o$

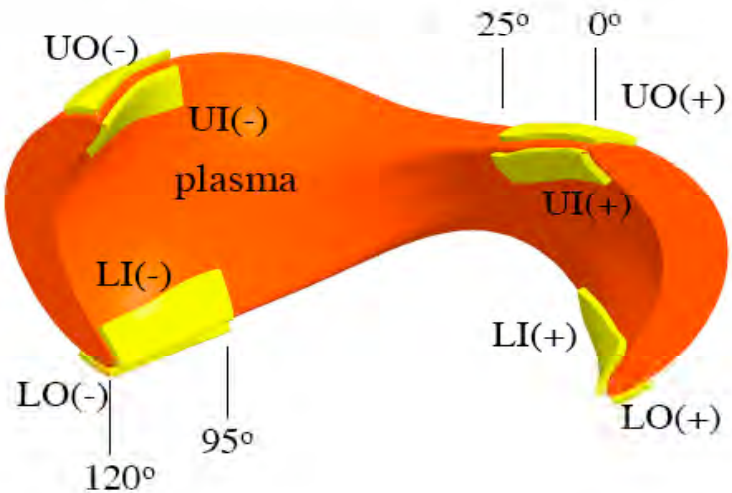

ARIES-CS Divertor Design

- **Design for a max. q'' of at least 10 MW/m²**
  - Productive collaboration with FZK
  - Absence of disruptions reduces demand on armor (lifetime based on sputtering)

- **Previous He-cooled divertor configurations include:**
  - W plate design (~1 m)
  - More recently, finger configuration with W caps with aim of minimizing use of W as structural material and of accommodating higher q'' with smaller units (~1-2 cm) (FZK)

- **Build on the W cap design and explore possibility of a new mid-size configuration with good q'' accommodation potential, reasonably simple (and credible) manufacturing and assembly procedures, and which could be well integrated in the CS reactor design.**
  - "T-tube" configuration (~10 cm)
  - Cooling with discrete or continuous jets
  - Effort underway at PPI to develop fabrication method

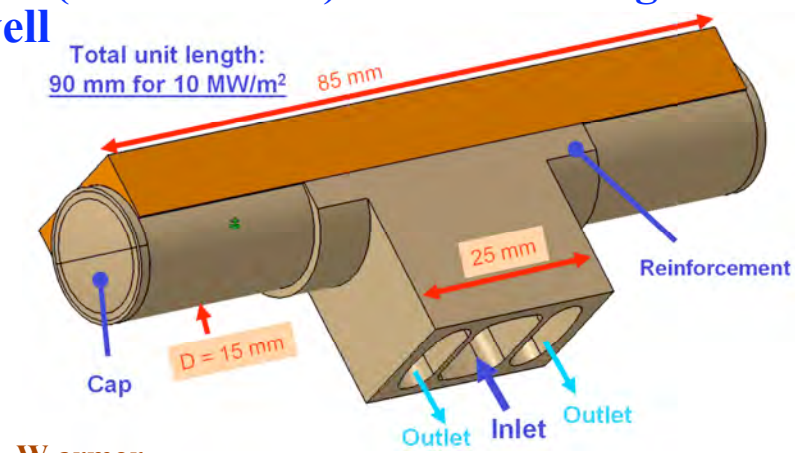

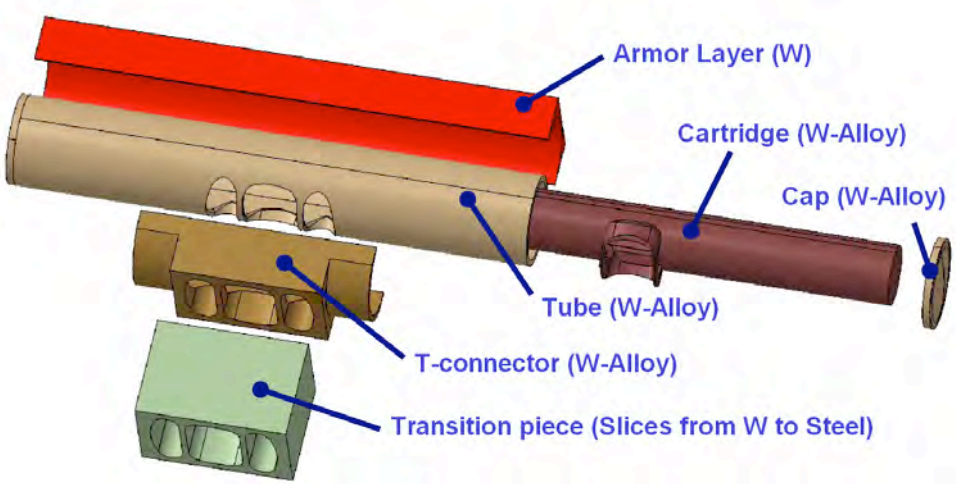

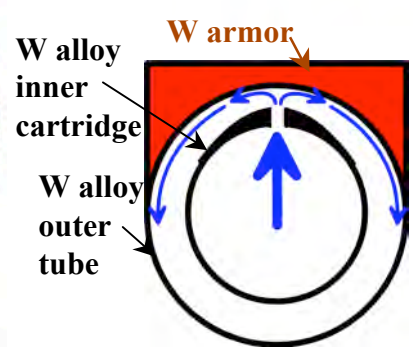

UC San Diego

T-Tube Configuration Looks Promising as Divertor Concept for ARIES-CS (also applicable to Tokamaks)

- **Encouraging analysis results from ANSYS (thermomechanics) and FLUENT (CFD) for q'' = 10 MW/m^2:**
  - W alloy temperature within ~600-1300°C (assumed ductility and recrystallization limits, but requires further material development)
  - Maximum thermal stress ~ 370 MPa
- **Results from experiments at Georgia Tech. have confirmed thermo-fluid modeling analysis.**

$\sigma_{th,max}$ ~ 370 MPa

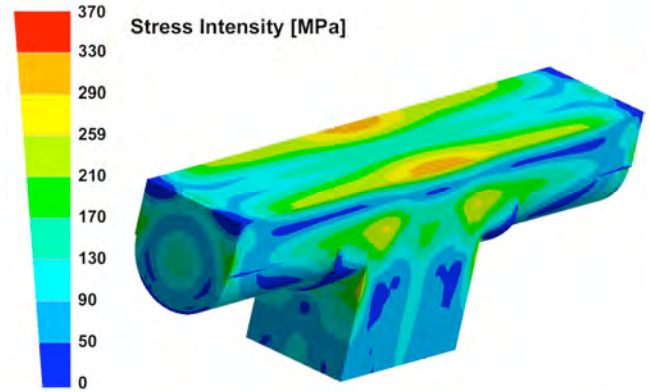

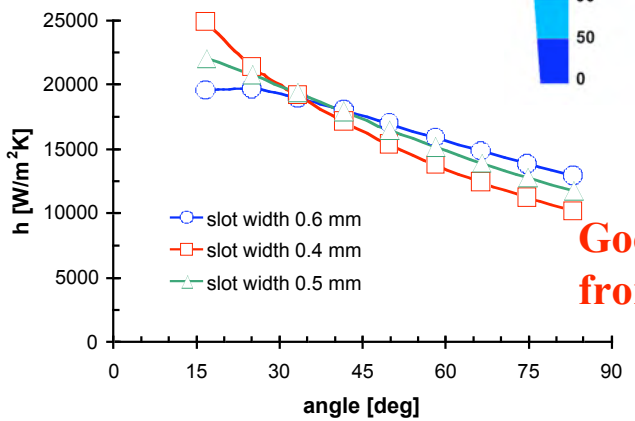

Good heat transfer from jet flow

Example Case:

- Jet slot width = 0.4 mm
- Jet-wall-spacing = 1.2-1.6 mm
- Specific mass flow = 2.12 g/cm^2
- Mass flow per tube = 48 g
- P = 10 MPa, ΔP ~ 0.1 MPa
- ΔT ~ 90 K for q'' = 10 MW/m^2
- T_{He} ~ 605 - 695°C

T_{max} ~ 1240°C

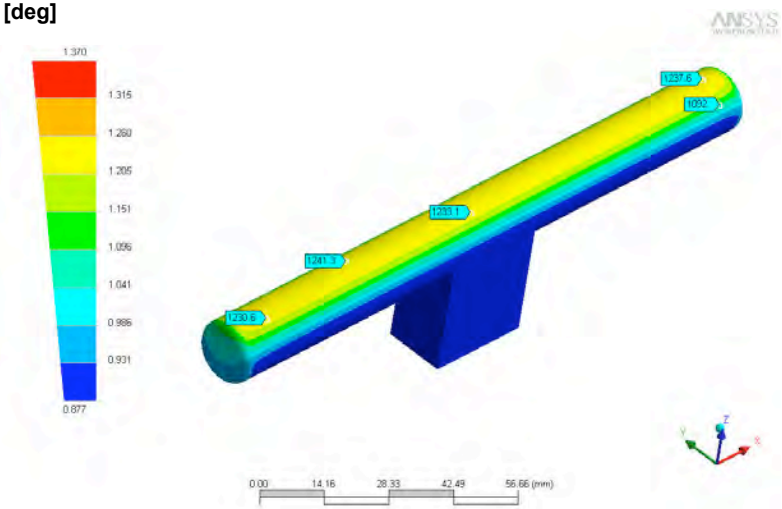

Divertor Manifolding and Integration in Core

- T-tubes assembled in a manifold unit.
- Typical target plate (~1m x 3 m) consists of a number of manifold units.
- Target plate supported at the back of VV to avoid effect of hot core thermal expansion relative to VV.
- Concentric tube used to route coolant and to provide support.
- Possibility of in-situ alignment of divertor plate if needed.
- 24 target plates in all.

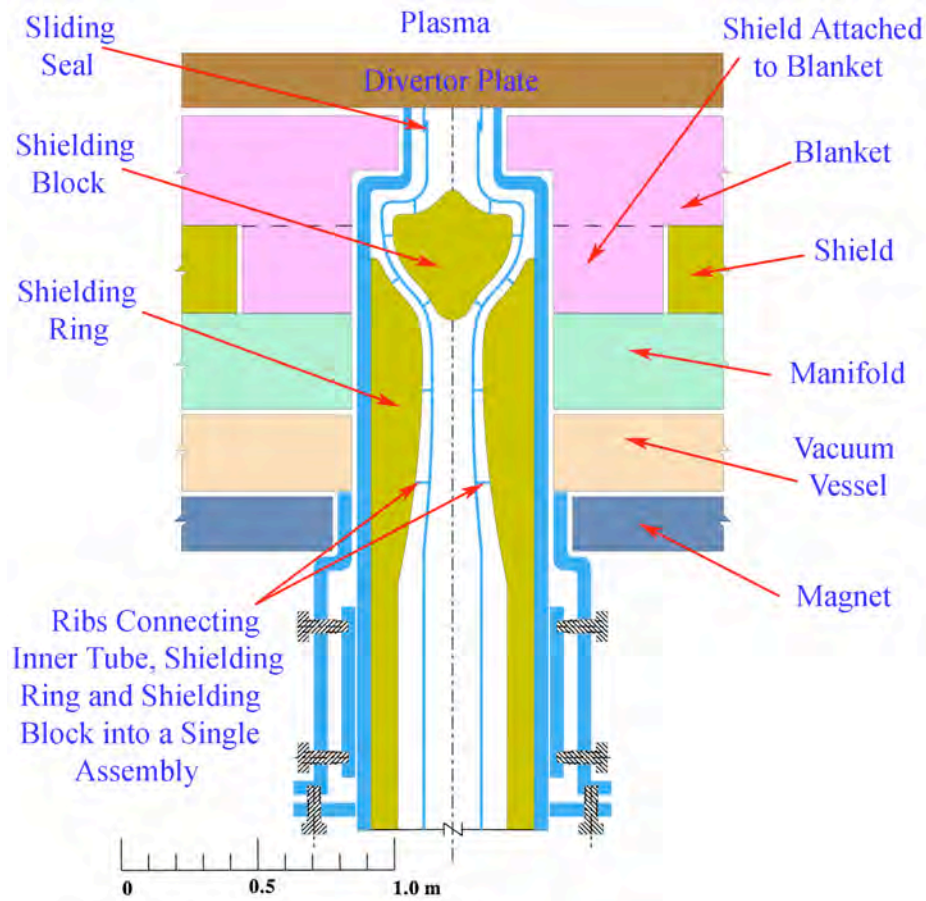

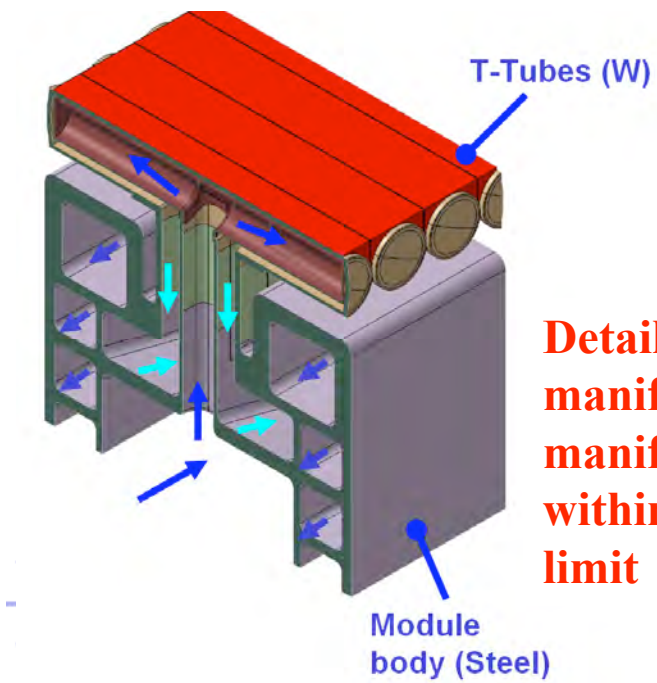

Details of T-tube manifolding to keep FS manifold structure within its temperature limit

UC San Diego

Alpha Loss

Accommodating Alpha Particle Heat Flux

- Significant alpha loss in CS (~5%) represents not only loss of heating power in the core, but adds to the heat load on PFC's.

- Impact of alpha particle flux on armor lifetime (erosion) is also a concern.

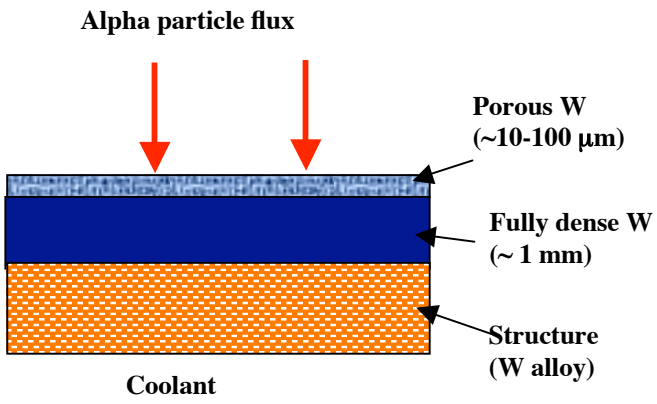

- Possibility of using nanostructured porous W (from PPI) to enhance implanted He release e.g. 50-100 nm at ~1800°C or higher

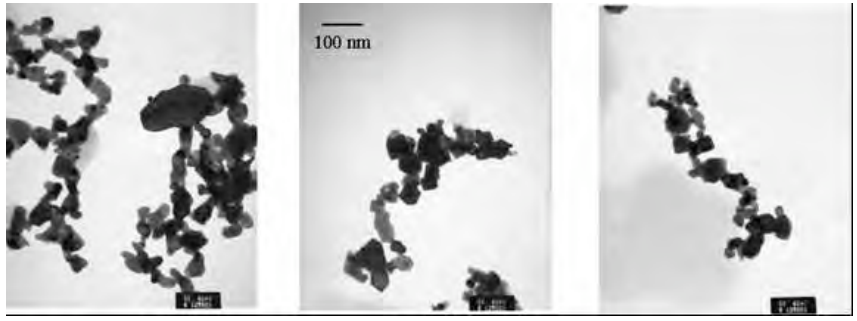

Safety Analysis

Confinement Strategy for ARIES-CS

- **ARIES-CS has adopted the confinement strategy call Defense-in-Depth, by establishing multiple radioactive confinement barriers between the radioactive source terms in the ARIES-CS vacuum vessel (VV) and the environment. For ARIES-CS these barriers are: VV, cryostat, heat transport system vault, and auxiliary rooms that adjoin to the cryostat**

- **The radioactive source terms of concern are:**
  - **Tritium implanted into plasma facing components (PFC)**
  - **Activated dust generated by PFC erosion (W)**
  - **Po-210 and Hg-203 produced by irradiation of the PbLi**

- **Energy sources that can challenge the confinement barriers are:**
  - **High pressure helium from the first wall (FW)/blanket wall cooling and secondary Brayton cycle systems**
  - **Decay heat**

- **Findings from analysis of reference accident scenarios:**
  - **Decay heat removal in ARIES-CS can be achieved by VV in natural convection mode.**
  - **Pressurizations events do not fail all ARIES-CS confinement boundaries.**

Summary (I)

- **Design point pushed to the limit for "compact" configuration with low aspect ratio; might be better to relax some parameters (e.g. major radius) to provide more margins on space and material stress/temperature limits.**
- **Assembly & maintenance, and penetration shielding are major factors in configuration optimization because of geometry and space constraints.**
- **Integration is particularly important because of interfaces and mutual impact of changes in one system design on others, including: modular coil design and structural support, power core design and maintenance & assembly.**
- **Alpha loss is a key issue: additional heat flux to divertor and He implantation need focused R&D.**

Summary (II)

- **Engineering effort has yielded some interesting and some new evolutions in power core design.**
  - **Novel blanket/shield approach to minimize plasma to coil minimum distance and reduce machine size.**
  - **First ever 3-D modeling of complex stellarator geometry for nuclear assessment using CAD/MCNP coupling approach.**
  - **Separation of hot core components from colder vacuum vessel (allowing for differential expansion through slide bearings).**
  - **Design of coil structure over one field-period with variable thickness based on local stress/displacement; when combined with rapid prototypic fabrication technique this can result in significant cost reduction.**
  - **Mid-size divertor unit (T-tube) applicable to both stellarator and tokamak (designed to accommodate at least 10 MW/m^2).**
  - **Possibility of in-situ alignment of divertor if required.**
  - **Significant reduction in stellarator radwaste stream.**
  - **Decay heat removal in ARIES-CS can be achieved by VV in natural convection mode.**
  - **Pressurizations events do not fail all ARIES-CS confinement boundaries.**

Papers to be Published in a Special Fusion Science & Technology Journal Issue on ARIES-CS

1. F. Najmabadi, A. R. Raffray and the ARIES-CS Team, “The ARIES-CS Compact Stellarator Fusion Power Plant”
2. L-P. Ku, P. R. Garabedian, J. Lyon, A. Grossman, T. K. Mau, A. Turnbull, M. Zarnstorff and the ARIES-CS Team, “Physics Design for ARIES-CS”
3. J. F. Lyon, L-P. Ku, L. El-Guebaly, L. Bromberg, and the ARIES-CS Team, “Systems Studies and Optimization of the ARIES-CS Power Plant”
4. A. R. Raffray, L. El-Guebaly, S. Malang, X. Wang, L. Bromberg, T. Ihli, B. Merrill, L. Waganer and the ARIES-CS Team, “Engineering Design and Analysis of the ARIES-CS Power Plant”
5. L. El-Guebaly, P. Wilson, D. Henderson, M. Sawan, G. Sviatoslavsky, T. Tautges, R. Slaybaugh, B. Kiedrowski, A. Ibrahim, C. Martin, R. Raffray, S. Malang, J. Lyon, L.P. Ku, X. Wang, L. Bromberg, B. Merrill, L. Waganer, F. Najmabadi and the ARIES-CS Team, "Designing ARIES-CS Compact Radial Build and Nuclear System: Neutronics, Shielding, and Activation"
6. T.K. Mau, T. Kaiser, A. A. Grossman, A. R. Raffray, X. R. Wang, J. F. Lyon, R. Maingi, L. P. Ku, M. C. Zarnstorff and the ARIES-CS Team, "Divertor Configuration and Heat Load Studies for the ARIES-CS Power Plant
7. L. M. Waganer, R. J. Peipert-Jr, X. Wang and S. Malang and the ARIES-CS Team, "ARIES-CS Maintenance System Definition and Analysis"
8. X. R. Wang, A. R. Raffray, L. Bromberg, J.H. Schultz, L. El-Guebaly, L. Waganer and the ARIES-CS Team, "ARIES-CS Magnet Conductor and Structure Evaluation"
9. B. J. Merrill, L. El-Guebaly, C. Martin, R. L. Moore, A. R. Raffray, D. A. Petti and the ARIES-CS Team, "Safety Assessment of the ARIES Compact Stellarator Design"
10. S. I. Abdel-Khalik, L. Crosatti, D. L. Sadowski, S. Shin, J. B. Weathers, M. Yoda and the ARIES-CS Team, “Thermal-Hydraulic Studies in Support of the ARIES-CS Divertor Design”
11. L. M. Waganer, K. T. Slattery, J. C. Waldrop-III and the ARIES-CS Team, "ARIES-CS Coil Structure Advanced Fabrication Approach”

Extra Slides

CAD/MCNP Coupling Approach Developed for 3-D Modeling of ARIES-CS Neutron Wall Load and Plasma Heat Flux Distribution

Neutron Wall Load:

Max/Min = 5.3/0.32 MW/m^2
Avg.= 2.6 MW/m^2

Neutron wall load

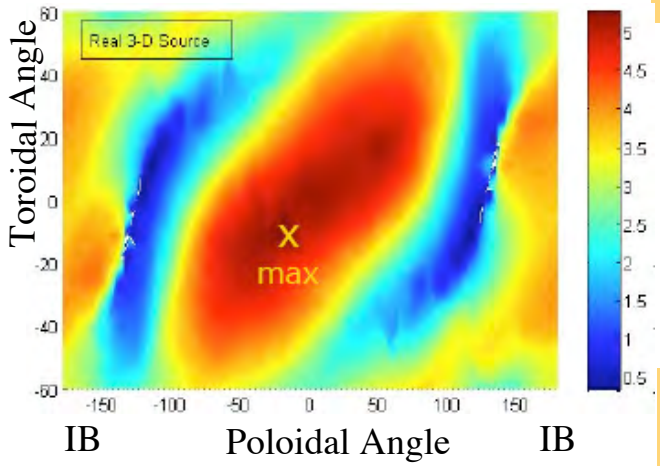

Plasma Heat Flux to FW:

Core radiation:

Max/Min=0.68/0.2 MW/m^2
Avg.=0.48 MW/m^2

Total:

Max/Min=0.76/0.28 MW/m^2
Avg.=0.57 MW/m^2

Radiation heat flux

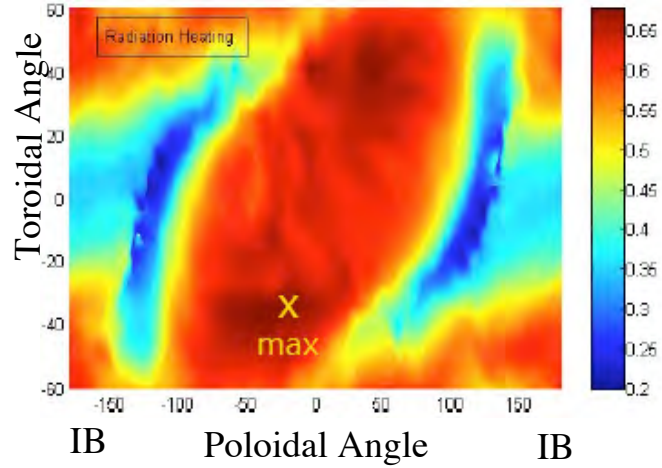

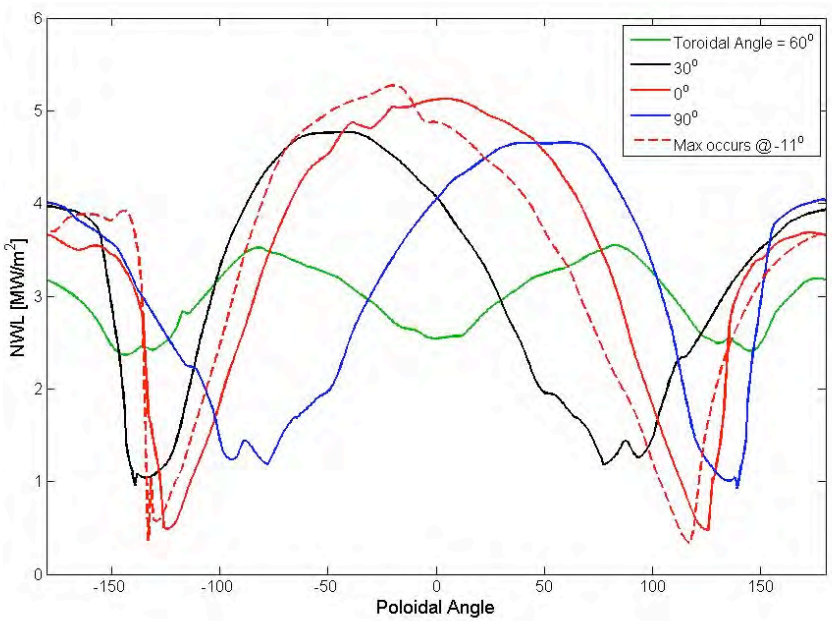

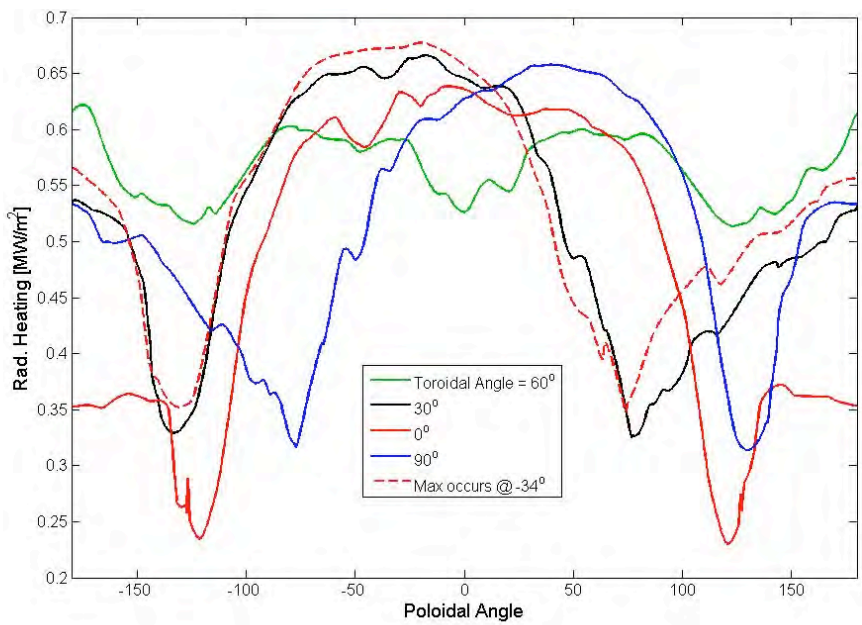

Optimized Blanket & Shield Provide Adequate Breeding (TBR=1.1) and Protect Vital Components

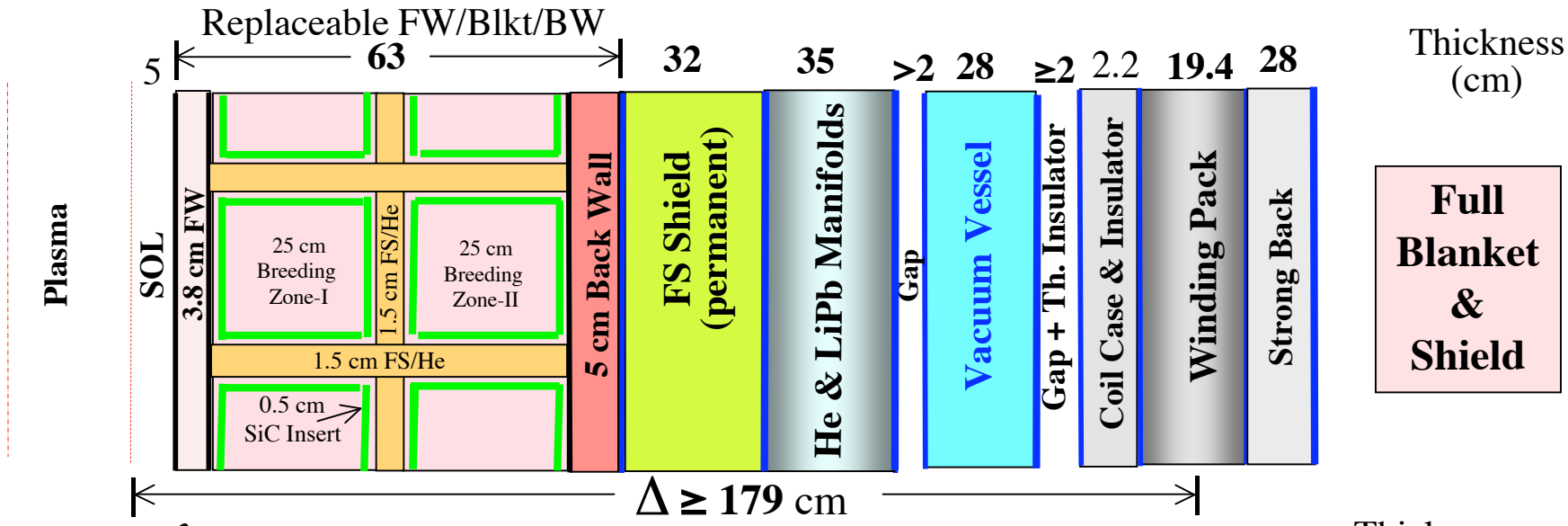

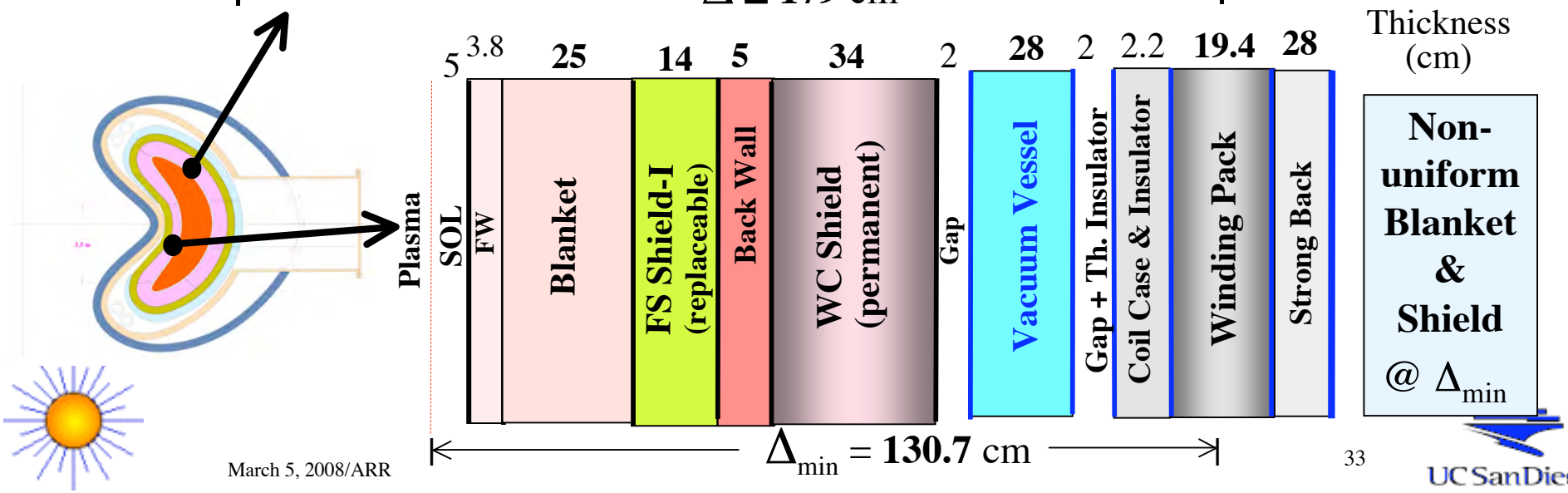

UC San Diego

Radial Build Satisfies Design Requirements

Overall TBR: **1.1**
(T self-sufficiency with liquid breeder blanket design providing for in-situ control)

Damage to Structure: **200 dpa - RAFS**
(for structural integrity) **3% burnup - SiC**

Helium Production @ Manifolds and VV: **1 He appm**
(for reweldability of FS)

S/C Magnet (@ 4 K):
- Peak fast n fluence to Nb_3Sn ($E_n > 0.1$ MeV): **10^{19} n/cm^2**
- Peak nuclear heating: **2 mW/cm^3**
- Peak dpa to Cu stabilizer: **6×10^{-3} dpa**
- Peak dose to electric insulator: **~ 10^{11} rads**

Plant Lifetime: **40 FPY**

Availability: **~ 85%**

Additional nuclear parameters:
- *Overall energy multiplication:* ***1.16***
- *FW/blanket lifetime:* ***3 FPY***

ARIES-CS Generates Only Low-Level Waste

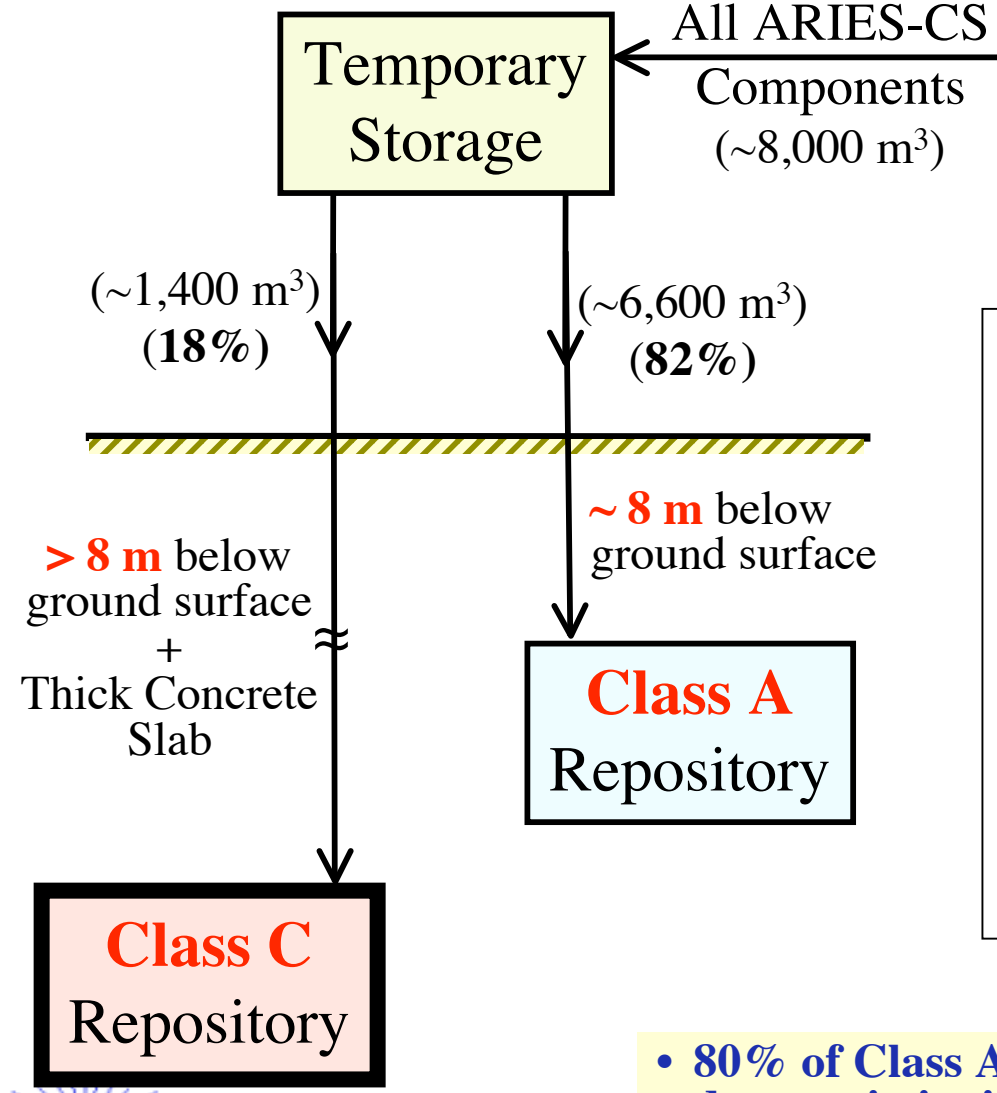

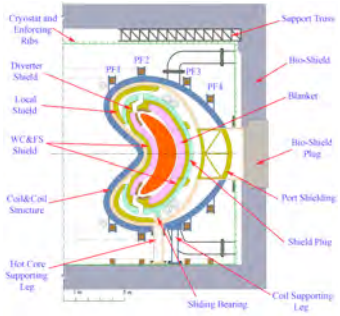

	Class C LLW	Class A LLW	Could be Cleared?
FW/Blkt/BW	√		no
Shield/Manifolds	√		no
Vacuum Vessel		√	no
Magnet:			
Nb_3Sn	√		no
Cu Stabilizer		√	√
JK2LB Steel		√	√
Insulator		√	√
Cryostat		√	√
Bioshield		√	√

- 80% of Class A waste can be cleared in < 100 y after decommissioning.
- All components could potentially be recycled.