EFDA
EUROPEAN FUSION DEVELOPMENT AGREEMENT

# Overview of EU DEMO activities and key Engineering Issues

David Maisonnier

Japan-US Workshop on
Fusion Power Plants and Related Advanced Technologies
with participation of EU

Kyoto, 5-7.02.2007

# Outline

Background

Key engineering and technological issues

- He-cooled divertor
- Blanket segmentation and maintenance
- Design integration

Future work

# Background

# Scope of work

DEMO activities in progress in Europe since 2005.

Work in 2005 focused on physics, on the helium-cooled divertor and on a few scoping studies, as reported at the last workshop.

All tasks started in 2005 were completed last year. A new round of tasks started in October 2006.

3 lines of work: physics, helium-cooled divertor R&D and DEMO design proper.

# Workprogramme 2006

Efforts focused on:

- Physics (iterative process: basic parameters fed from systems code to detailed models, and then update of the systems code)
- He-cooled divertor (first small mock-up tests)
- Blanket segmentation and in-vessel maintenance scheme (concentrate on vertical maintenance scheme)
- Design Integration

On physics issues, refer to presentation by L. Horton.

I will outline the critical issues and our current work on the other issues.

# Technological and Engineering Issues

# He-cooled Divertor (1)

## Finger Unit

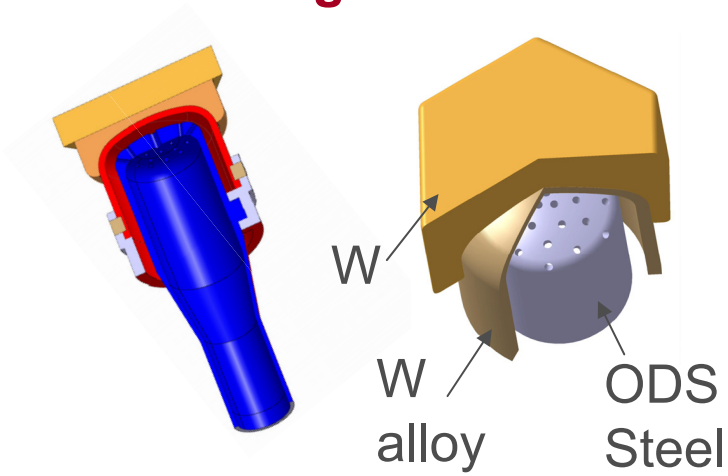


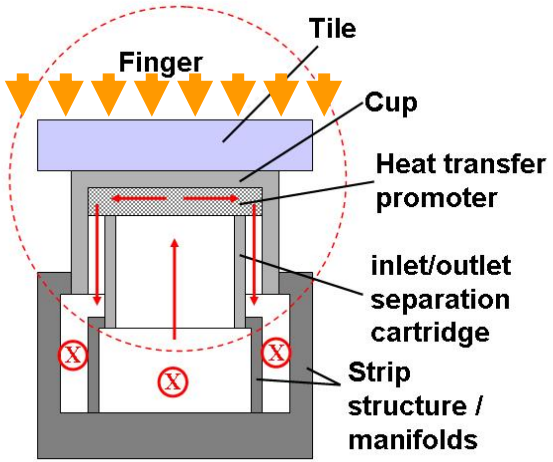


**Radial cooling basic principle**

## 9-Finger Unit

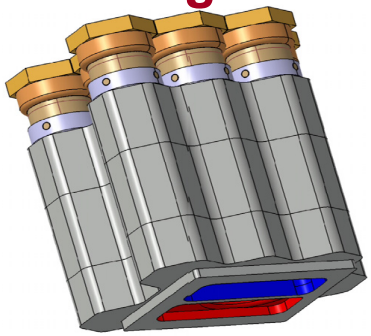

## Stripe-Unit

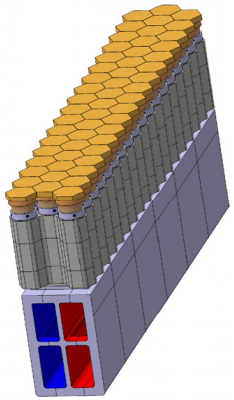

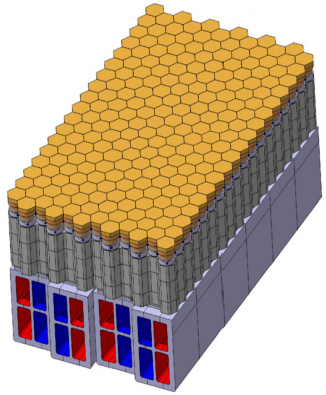

## Target Plate

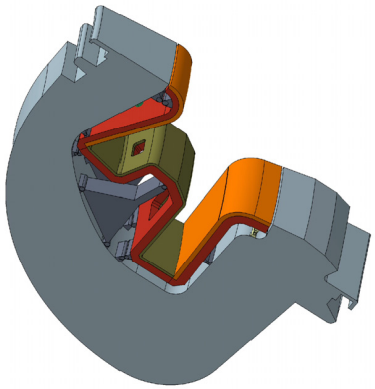

## Divertor Cassette

# HEMS and HEMJ design

## HEMS concept

*HT brazing*

*W/steel transition piece*

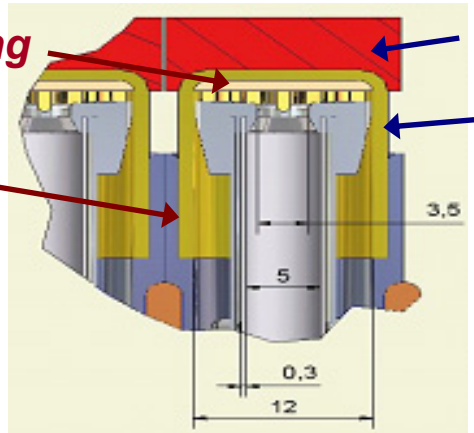


Tungsten tile

W-alloy thimble

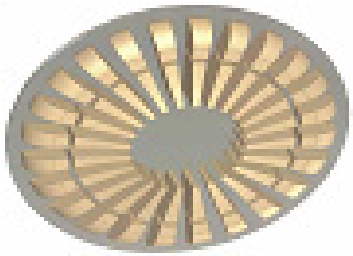

HEMS flow promoters

**HEMJ thimble mock-ups**
(5 HEMJ fingers and 2 HEMS fingers mock-up manufactured, 6 of which have been tested)

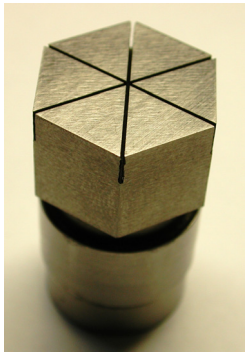

# Single vs. multi-jet

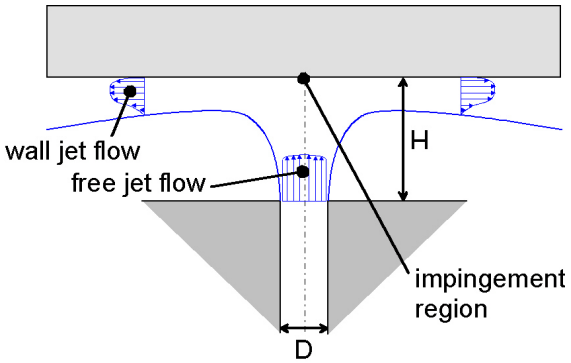


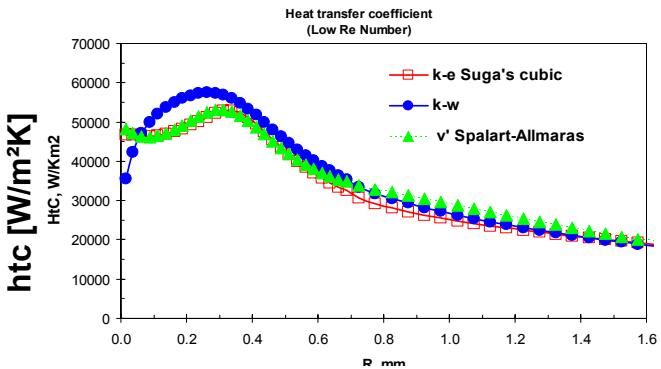


**Distance from Jet Center [mm]**

**$Ø_{jet}$ = 0.6 mm**

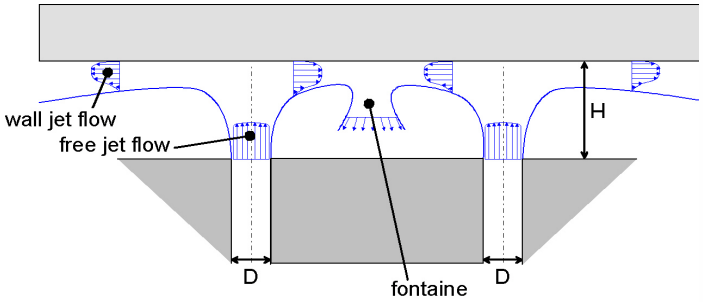


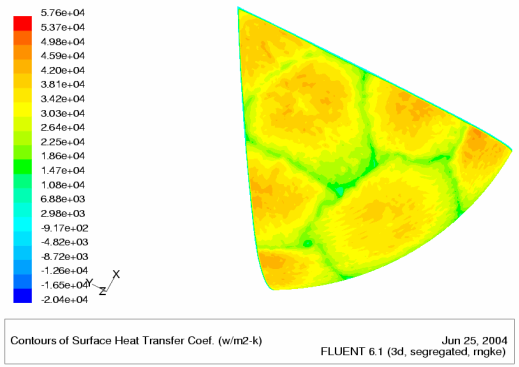

# HEMJ CFD analysis

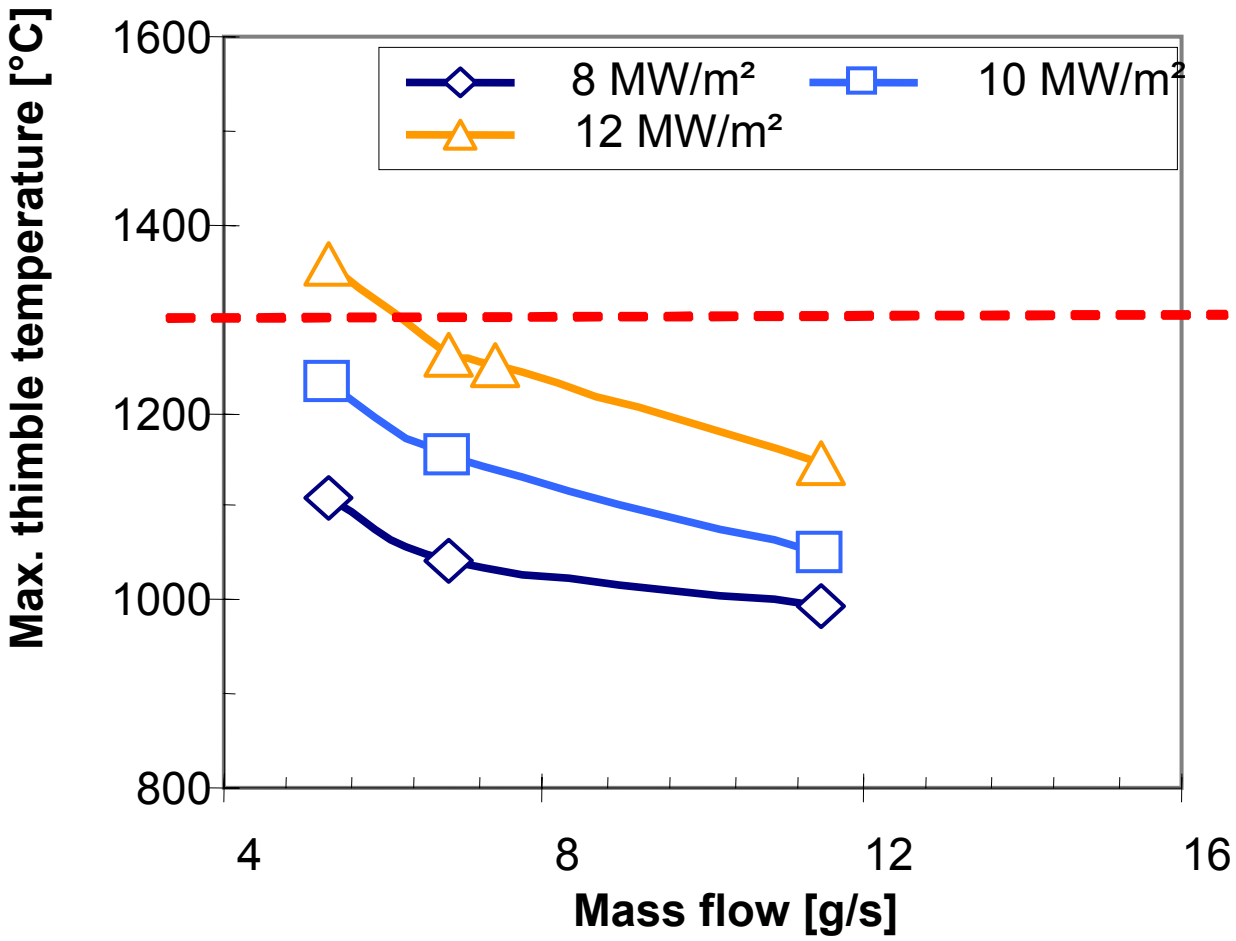

# HEMJ temperature windows

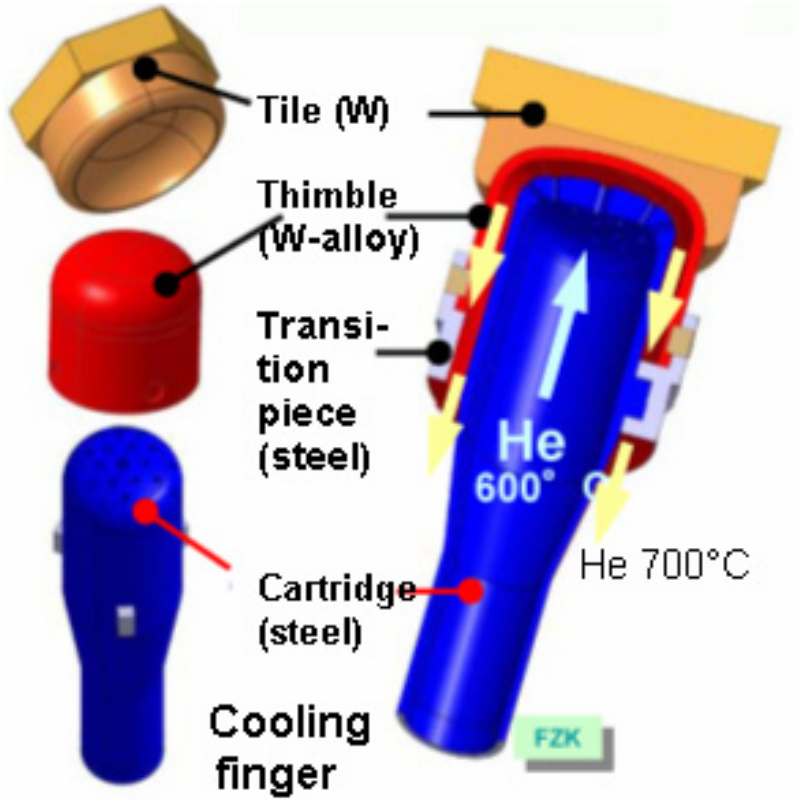


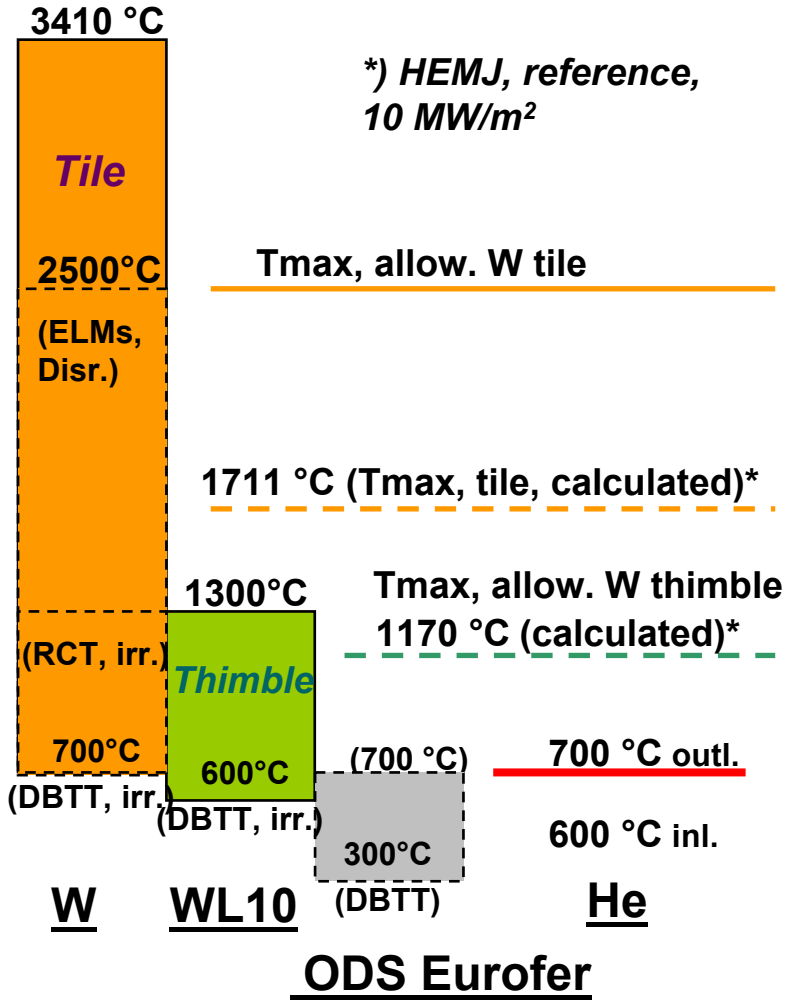

# Test Objectives

Thermal-mechanical experiments – to check technological/materials performance

- thermal-mechanical behavior of 1-finger divertor elements (materials, joints)
- examination of 1-finger design

Thermal-hydraulic experiments – to find optimal cooling parameters

- thermal-hydraulic performance of 1-finger elements at different cooling regimes

# Tsefey Test facility

- Stationary helium flow
- $T_{in}$ 600°C
- Pressure of at least 10 MPa
- Helium supply up to 600 g/s
- E-beam up to 60 kW (to be upgraded to 200) ⇔15 MW/m²

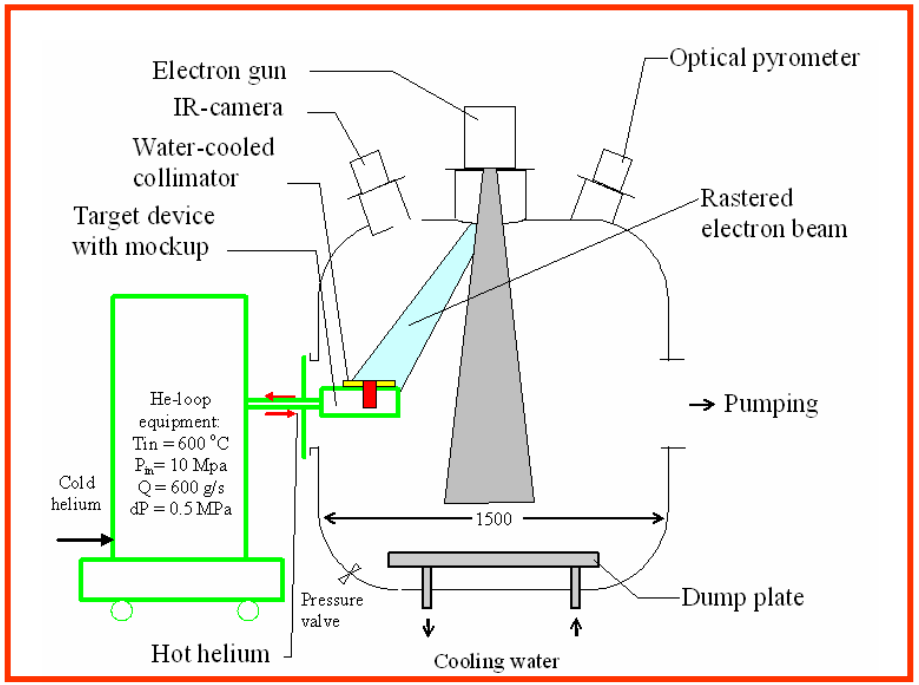


- Measurement of incident and absorbed heat loads
- Measurement of temperature by IR cameras
- Thermocouples measurements for calibration and bulk temperatures

# Test Results

Mock-ups tested under q=5-13 MW/m$^2$, with helium cooling parameters: $P_{in}$~10MPa, $T_{in}$~ 600°C and g~5-15g/s.

Comparison of measured and predicted surface temperature shows acceptable agreement – within 5%.

Three types of damages were detected – thimble cracking with or without gas leakage, tile cracking with and without cracks propagation through the thimble, loss of thermal contact at the tile/thimble interface.

Main concern is thimble cracking, due to manufacturing.

We believe that reliable operation are possible under heat loads <10-12 MW/m$^2$ with a pumping power in the range of 10-15 % (heat power deposited on the divertor).

# Remote Maintenance (1)

Blanket segmentation adopted in ITER not reactor relevant (availability just above 50%).

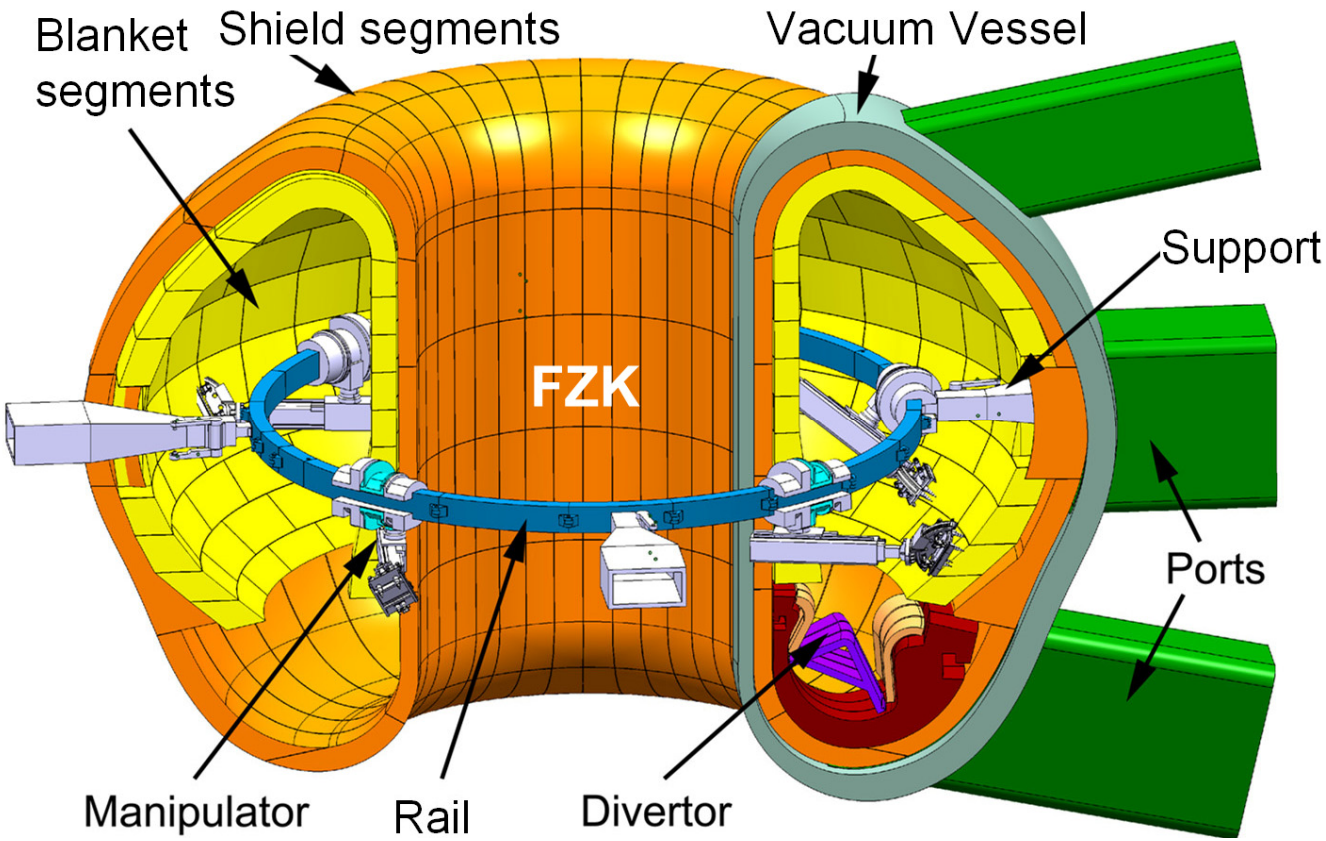

# Remote Maintenance (2)

Main drivers for maintenance time: number of components handled, parallel operations, logistics

Segmentation in a smaller number of elements required (ITER: more than 400, reactor: less than 200).

Possible alternatives: “large modules” (150-200) as in PPCS, vertical “bananas” (100-150) as in ITEER CDA or large “sectors” (≈16) as in ARIES-RS.

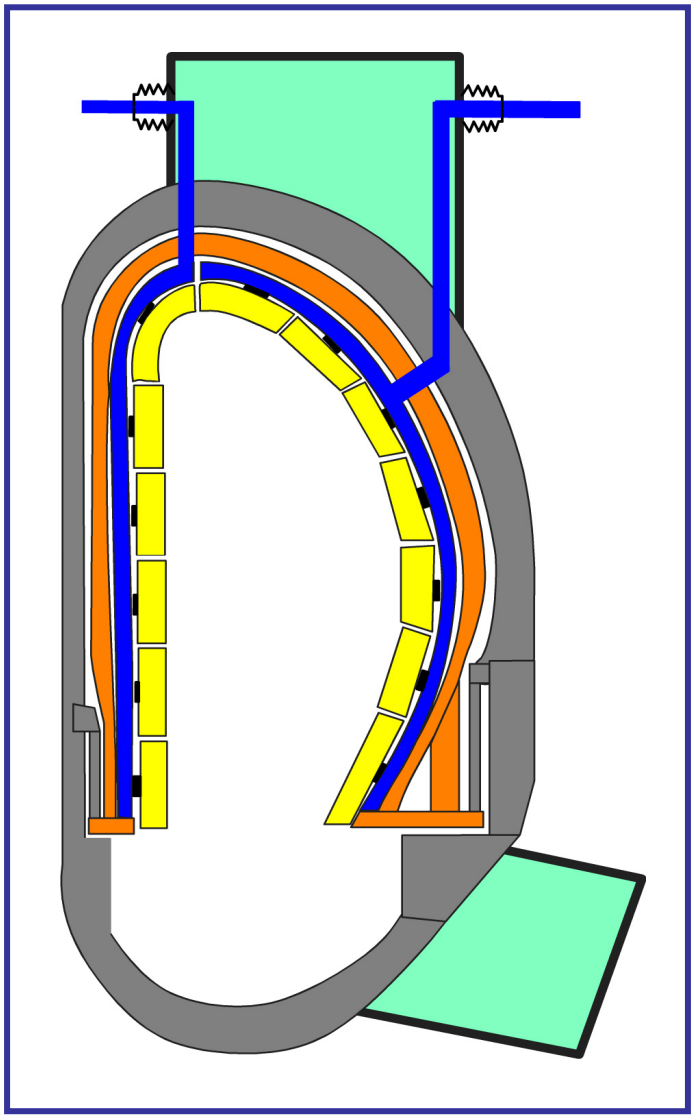

# Handling of “modules”

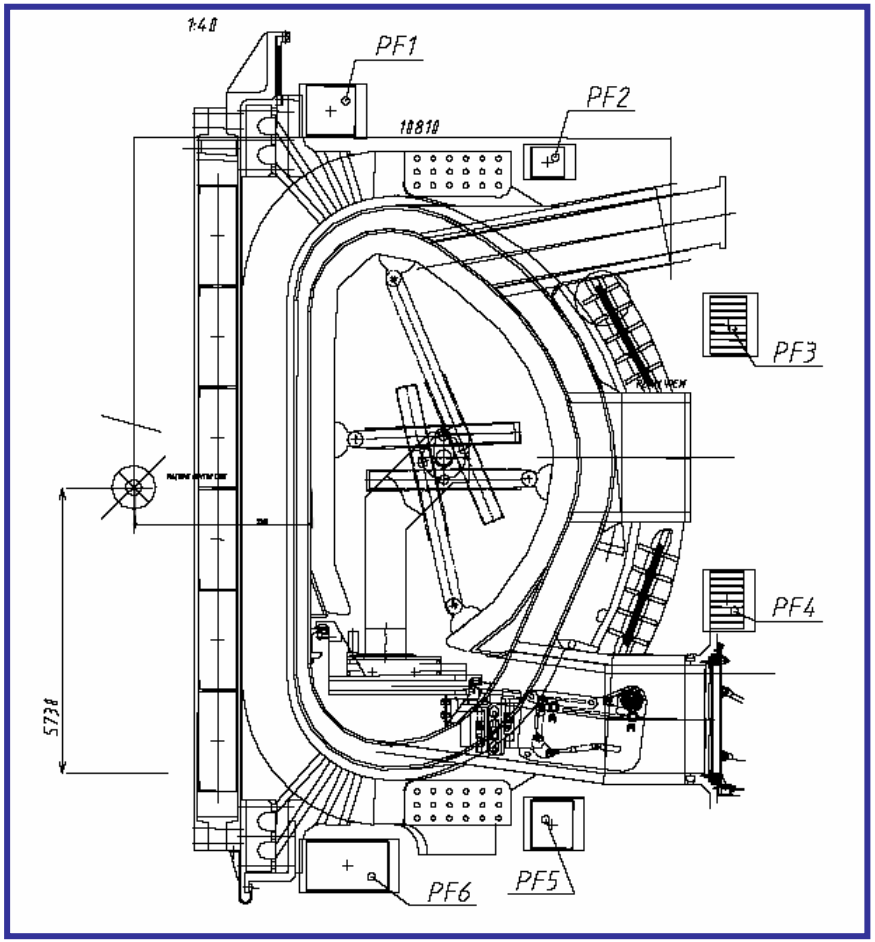


Lifetime: blanket 5 yr., divertor 2 yr.

Estimates for PPCS models A (189 BM, 54 DC) and B (162 BM, 54 DC):

Availability between 78 and 85 % without contingencies (depending in particular on number of parallel operations)

**(PPCS: 10th of a kind)**

# Handling of “bananas”

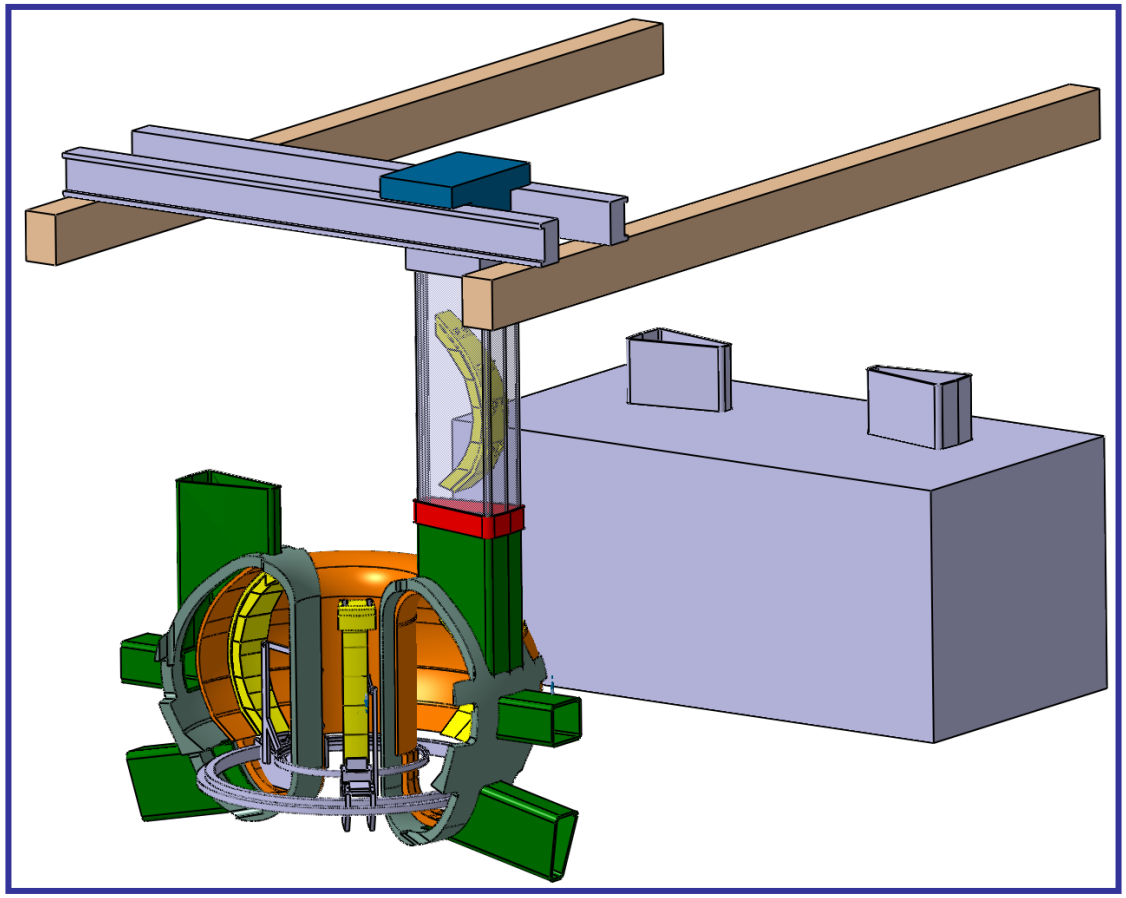

Assessment in progress.

Significant impact on overall reactor architecture and on blanket design.

# Handling of "sectors"

Our assessment of this concept is less favourable than in either Japan or in the US.

We foresee major feasibility issues and, if resolved, an intervention time comparable to that foreseen for the other maintenance concepts.

Our assessment may be wrong …

… the fact is, there is not yet a convincing in-vessel maintenance scheme for the internals of a large tokamak device.

# Design Integration

We have assumed helium cooling for the internals, LiPb for tritium breeding, segmentation in vertical segments.

DEMO parameters will be presented by L. Horton (1GWe, R=7.5m).

Radial-build practically completed (bore for CS, cross-section of TF coil inner leg, neutron shielding, VV structural integrity).

LTS considered for the radial-build. Potential benefits of HTS assessed separately.

# Conclusions, future work

# Conclusions

Our current plan is to finalise a DEMO design by the middle of 2008.

Our on-going work and a strategic document, currently being reviewed by our Committee system, will form the basis of our contributions to the BA activities.

We look forward to a closer technical cooperation with Japan and, hopefully, with other ITER Parties, within the BA framework.