Consideration on Maintenance Scheme of Slim-CS Tokamak Reactor

Japan-US Workshop on Fusion Power Plants and Related Advanced Technologies with Participation of EU, February 5-7 , 2007 at Kyoto, Japan

S. NISHIO and Reactor Design Team

Japan Atomic Energy Agency, Naka Fusion Institute,
Naka-shi, Ibaraki-ken 311-0193, Japan

nishio.satoshi@jaea.go.jp

Contents

Engineering Issues for Hot-cell Maintenance

- TFC bore size becomes too large ! ?
- Weight of transportable device becomes too heavy ! ?
- Reactor building becomes too large ! ?

In-situ Maintenance vs. Hot-cell Maintenance

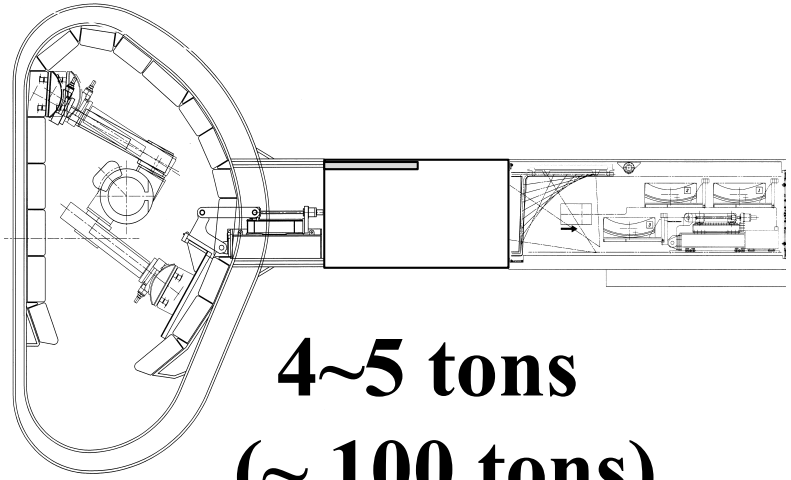

4~5 tons
(~ 100 tons)

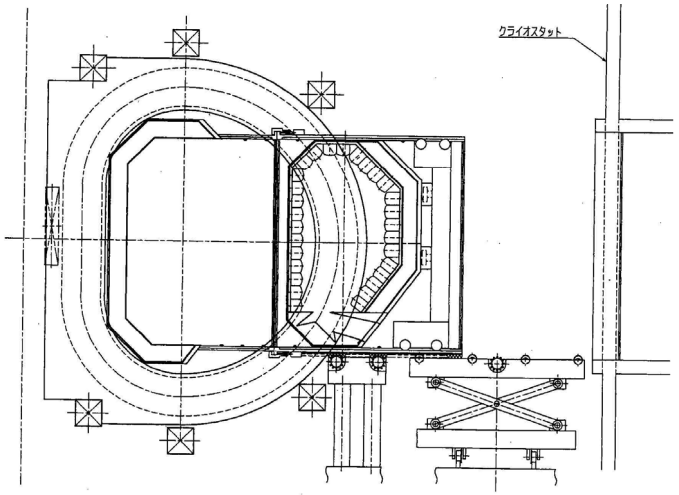

~300 tons
(~ 600 tons)

Too many processes
Too complicated processes
Too delicate Processes

Availability ??

Transportability ??

Why In-situ Maintenance for ITER ?

- High availability is not required.
- Scheduled maintenance is not scheduled.
  Damaged some modules are replaced.
- To avoid large TF coil.
- To avoid large reactor building.

How to mitigate the weaknesses of hot-cell maintenance scheme.

To avoid large TF coil

High Aspect Ratio

&

Massive TFC

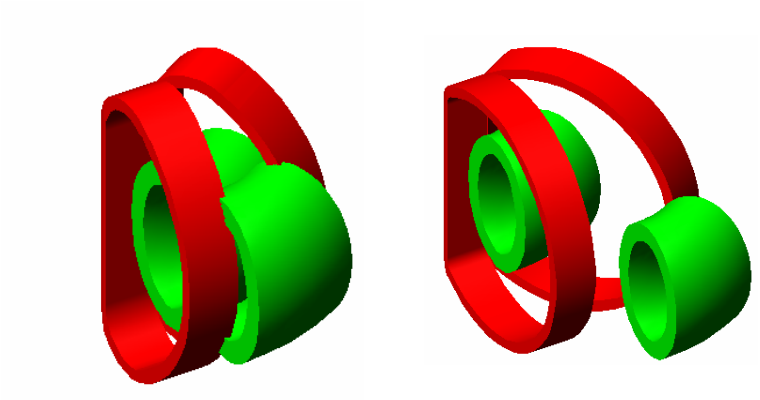

Interference

Low Aspect Ratio

&

Slim TFC

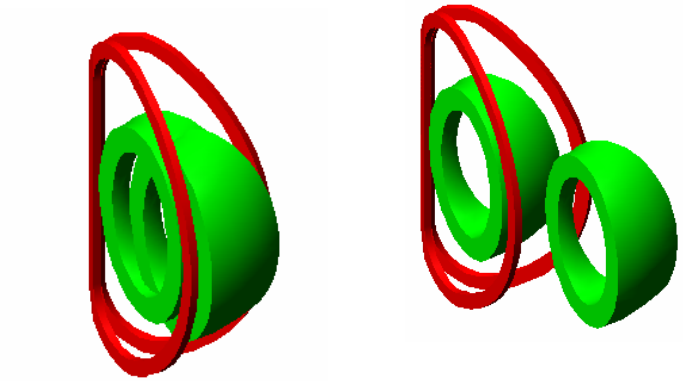

Low sensitivity

dW/dR

W : width between TF coils

R : Torus major radirs

High sensitivity

Field strength of slim TFC is sufficient ?

Low A plasma accepts weak toroidal field

$$P_f \propto \beta_t^2 B_0^4 \propto \beta_N^2 B_0^2$$

$$P_f = 3\ \text{GW},\quad P_n = 5\ \text{MW/m}^2$$

β strongly depends on A.

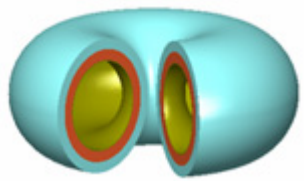

Wt ~ 3500 ton

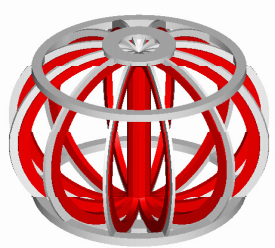

Wc < 2000 ton

Lightweight

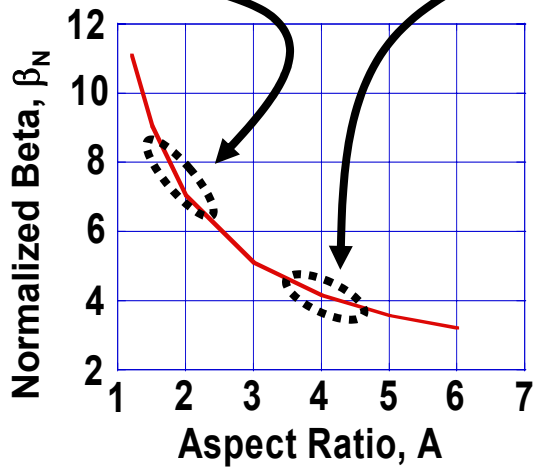

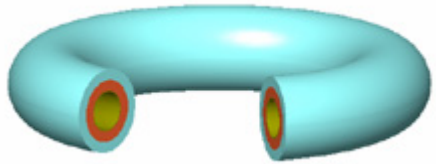

Wt ~ 3500 ton

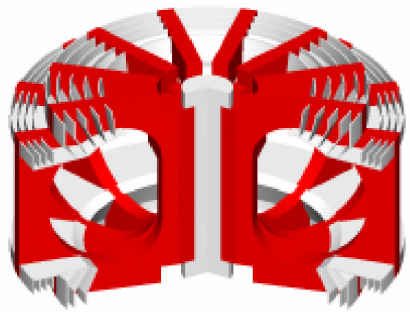

Wc > 15000 ton

Massive

To avoid large reactor building

Required space for U-turn motion of cask container

In-situ Maintenance

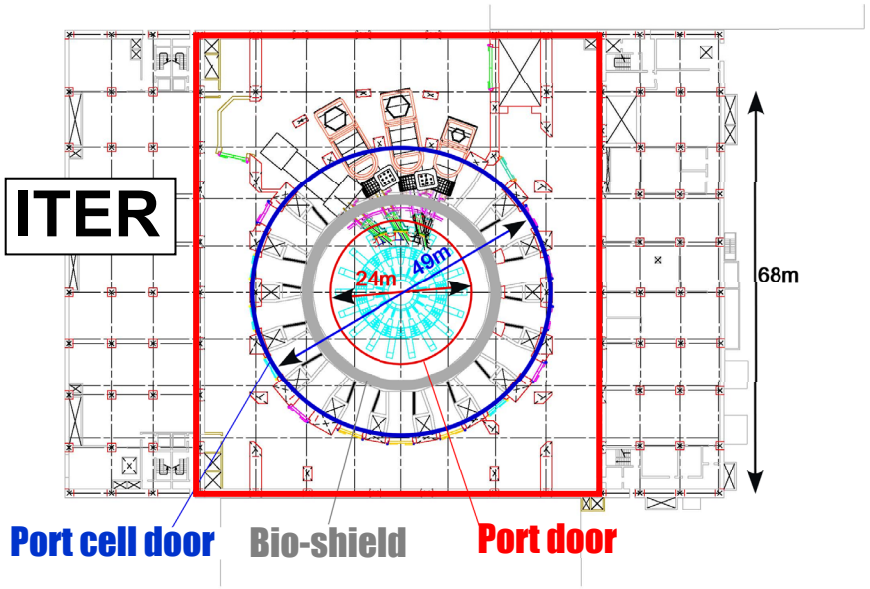

Cask with steering wheel and air-jack

Hot-cell Maintenance

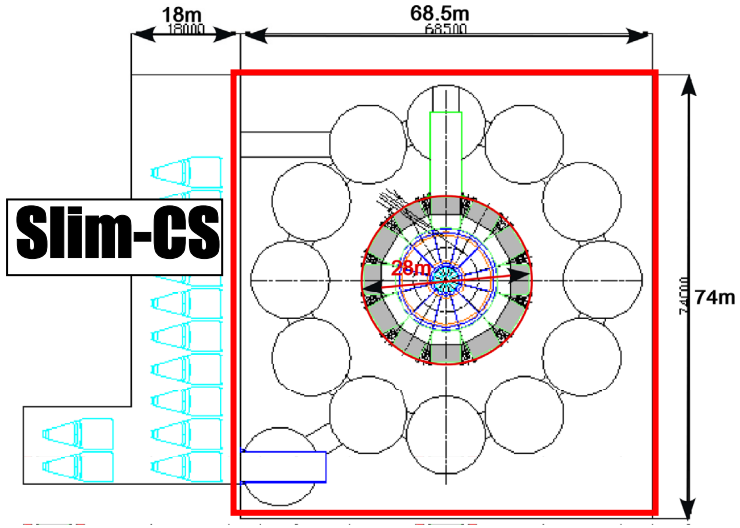

Cask without steering wheel

Sector Replacement Procedural Steps (2D)

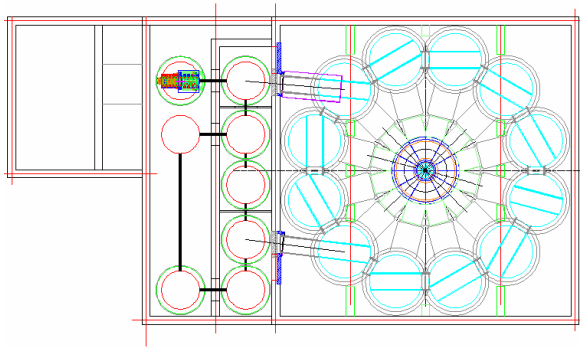

Cask traverse from turn table to turn table for the destination sector

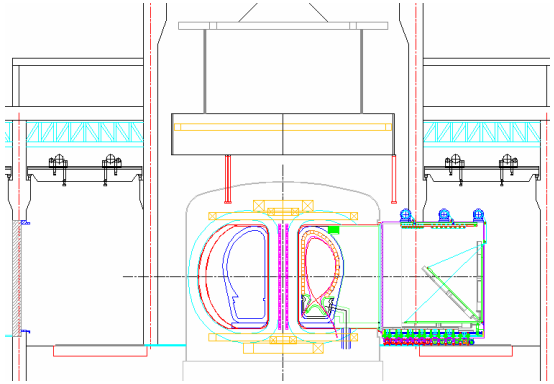

(1) Cask is connected to reactor.
(2) Shield plug is pulled out.
(3) Sliding plate is slipped into reactor.

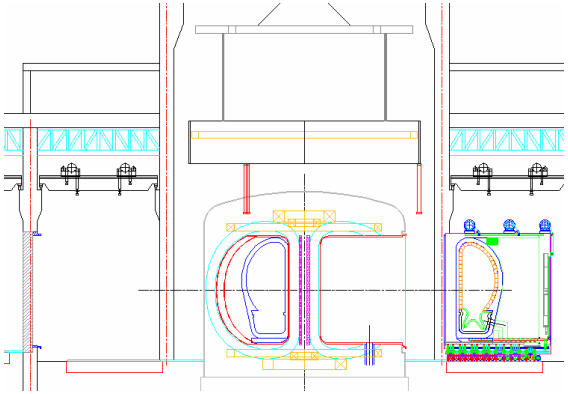

Old (spent) sector is housed in the cask

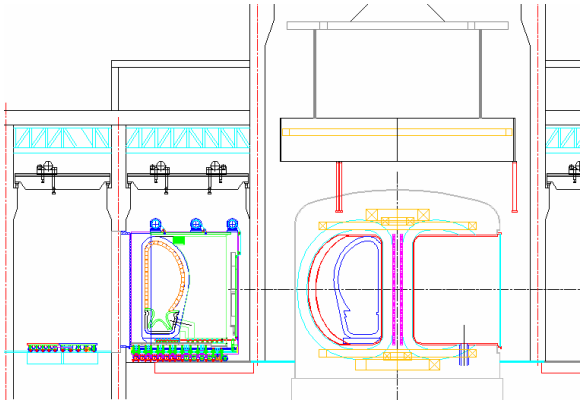

Old (spent) sector is delivered to hot-cell area

Sector Housing Process from Reactor to Cask (3D)

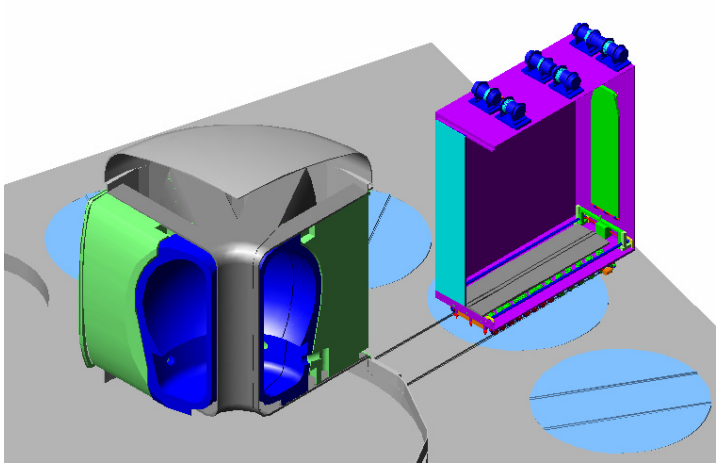

Cask is connected to reactor.

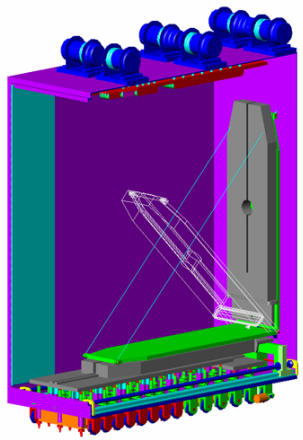

Shield plug is pulled out and fixed on back of cask.

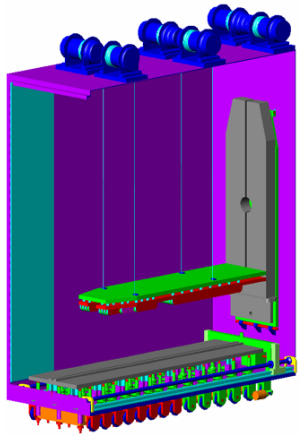

Sliding plate is lifted down.

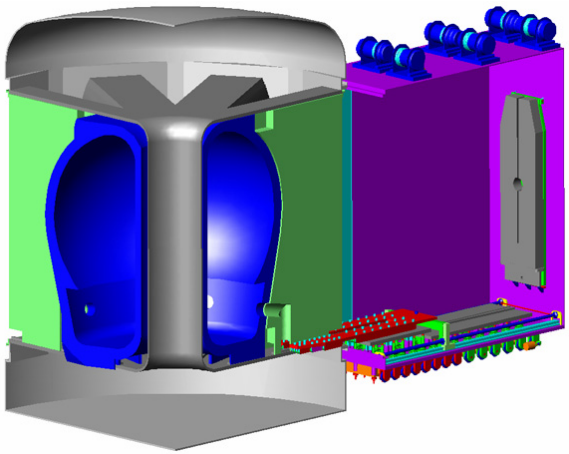

Sliding plate is slipped into reactor.

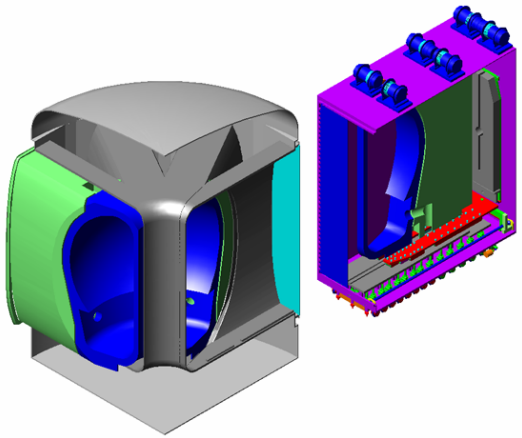

Old (spent) sector is housed in the cask

Summary
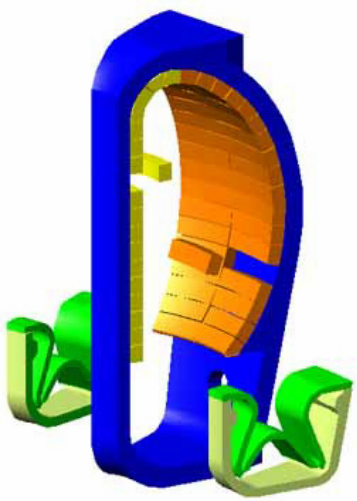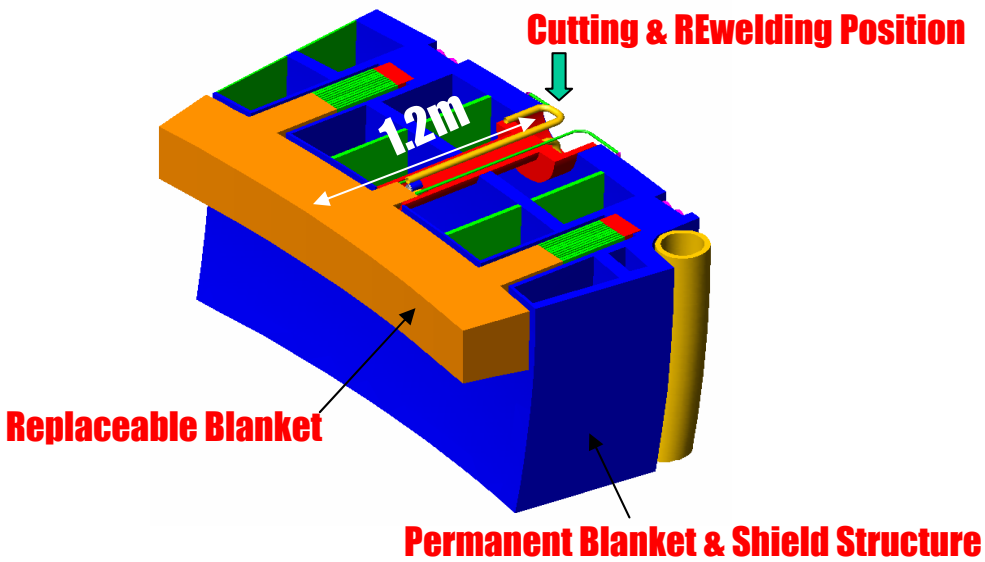
- Whole sector removal is compatible with low A reactor.
- Spent blanket and divertor are replaced in hot-cell area.
- Higher availability is expected for hot-cell maintenance scheme.