Engineering Design and Analysis of the ARIES-CS Power Plant

Presented by A. R. Raffray (UCSD)

Contributors:

Power Core Design & Integration:	S. Malang, X. R. Wang (UCSD)
Nuclear Analysis:	L. El-Guebaly (UW), P. Wilson (UW), D. Henderson (UW)
Coil Material and Design:	L. Bromberg (MIT)
Coil Structural Design and Analysis:	X. R. Wang (UCSD)
Divertor Design and Analysis:	T. Ihli (FZK), S. Abdel-Khalik (G. Tech)
Assembly and Maintenance:	S. Malang, X. R. Wang (UCSD), L. Waganer (Boeing), R. Peipert Jr (Boeing)
Safety and Environmental Analysis:	B. Merrill (INL), L. El-Guebaly (UW), C. Martin (UW)

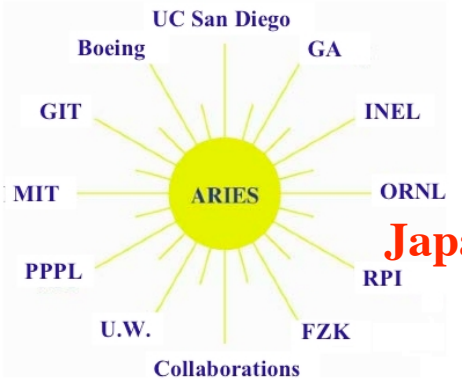

and the ARIES-CS Team

Japan-US Workshop on Fusion Power Plants and Related Advanced Technologies with Participation of EU

Kyoto, Japan, February 5-7, 2007

UC San Diego

Outline

- Design challenges associated with a CS
- Engineering effort to address these challenges
  - Neutron wall load and heat flux
  - Radial build
  - Blanket
  - Integration and Maintenance
  - Coil design and structural analysis
  - Divertor
  - Alpha loss
  - Safety and environmental analysis
- Summary

The ARIES Team Has Just Completed the Last Phase of the ARIES-CS Study

Phase I: Development of Plasma/coil Configuration Optimization Tool

1. Develop physics requirements and modules (power balance, stability, a confinement, divertor, etc.)
2. Develop engineering requirements and constraints through scoping studies.
3. Explore attractive coil topologies.

Phase II: Exploration of Configuration Design Space

1. Physics: b, aspect ratio, number of periods, rotational transform, shear, etc.
2. Engineering: configuration optimization through more detailed studies of selected concepts
3. Trade-off studies (systems code)
4. Choose one configuration for detailed design.

Phase III: Detailed system design and optimization

Key Stellarator Constraints Impacting the Engineering Design and Performance of the Power Plant

- Minimum distance between coil and plasma
- Neutron wall load peaking factor
- Space available for maintenance under complex coil configurations
- Alpha loss

- Our goal was to push the design to its constraint limits to help assess the attractiveness of a CS power plant and understand key R&D issues driving these constraints
  - Understanding that some parameters would have to be relaxed to increase margin

We Considered Different Con Þgurations Including NCSX-Like 3-Field Period and MHH2-Field Period Con Þgurations

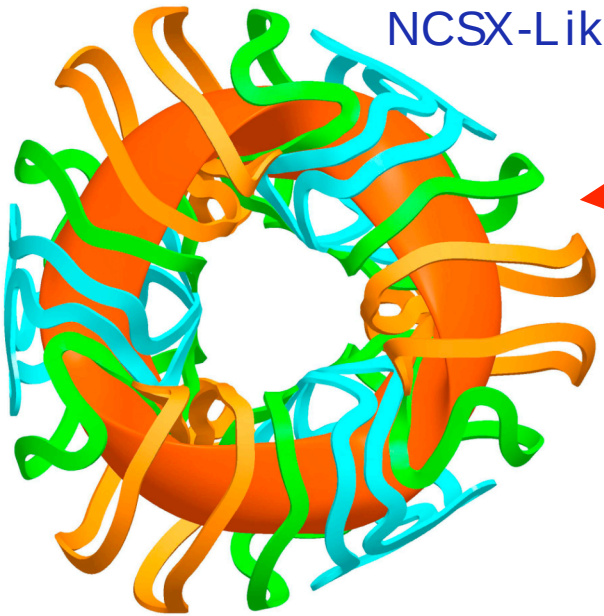

NCSX-Like 3-Field Period

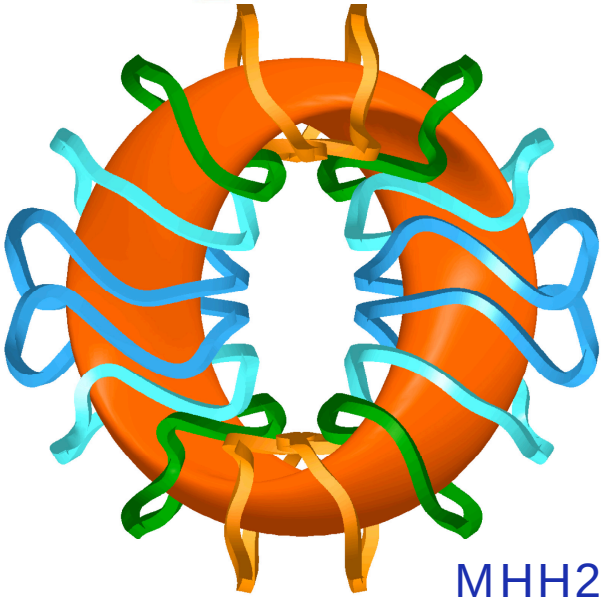

MHH2 2-Field Period

Parameters for NCSX-Like 3-Field Period (focus of last phase of study)

Min. coil-plasma distance (m)	1.3
Major radius (m)	7.75
Minor radius (m)	1.7
Aspect ratio	4.5
□ (%)	5.0
Number of coils	18
B_o (T)	5.7
B_{max} (T)	15.1
Fusion power (GW)	2.4
Avg./max. wall load (MW/m^2)	2.6/5.3
Avg./max. plasma qÕÕ (MW/m^2)	0.58/0.76
Alpha loss (%)	~5
TBR	1.1

UC San Diego

Neutron wall load distribution and heat ßux distribution

CAD/MCNP Coupling Approach Developed for 3-D Modeling of ARIES-CS Neutron Wall Load and Plasma Heat Flux Distribution

Neutron wall load

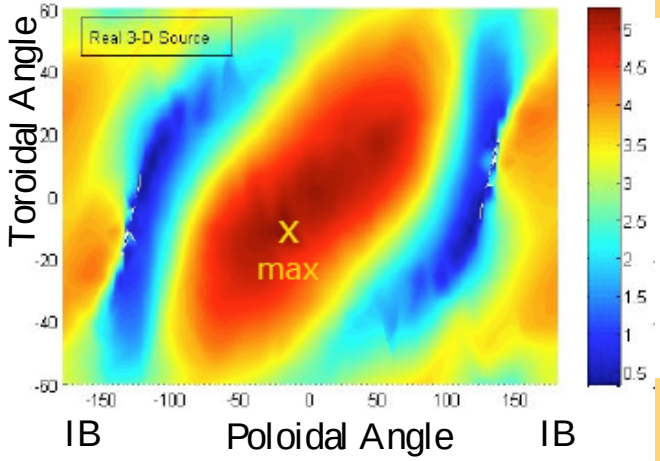

Neutron Wall Load:

Max/Min = 5.3/0.32 MW/m^2
Avg.= 2.6 MW/m^2

Plasma Heat Flux to FW:

Core radiation:

Max/Min=0.68/0.2 MW/m^2
Avg.=0.48 MW/m^2

Total:

Max/Min=0.76/0.28 MW/m^2
Avg.=0.57 MW/m^2

Radiation heat flux

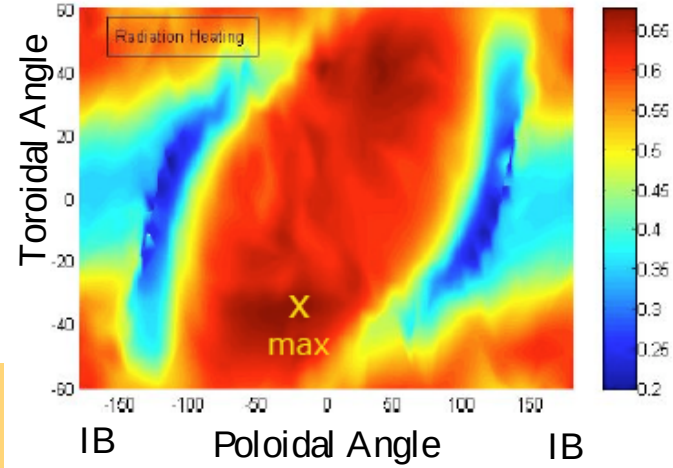

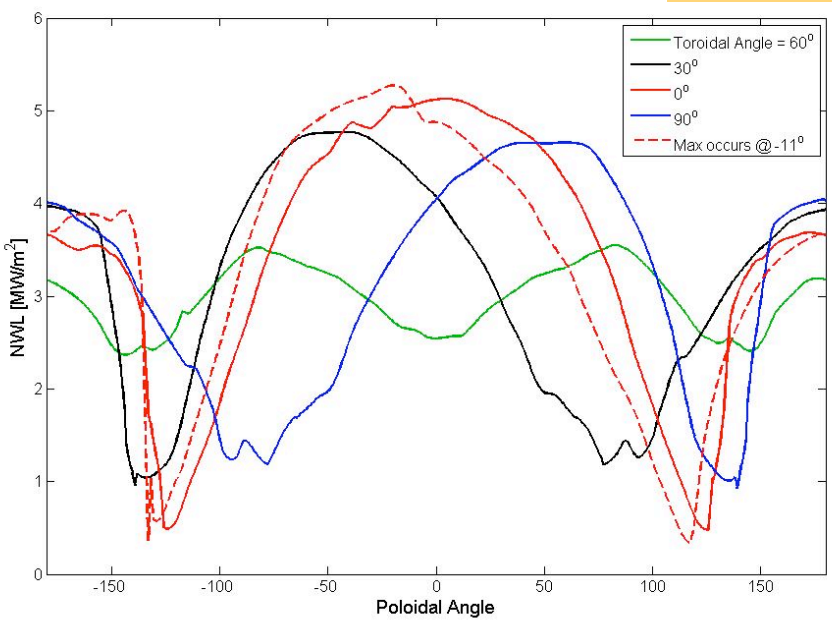

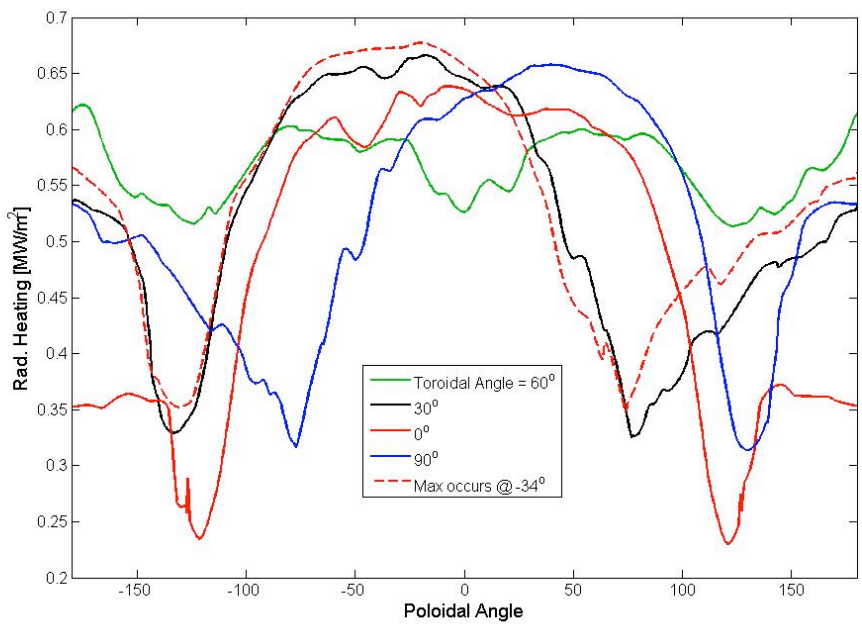

Radial build
(to provide required breeding and shielding)

Optimized Blanket & Shield Provide Adequate Breeding and Protect Vital Components

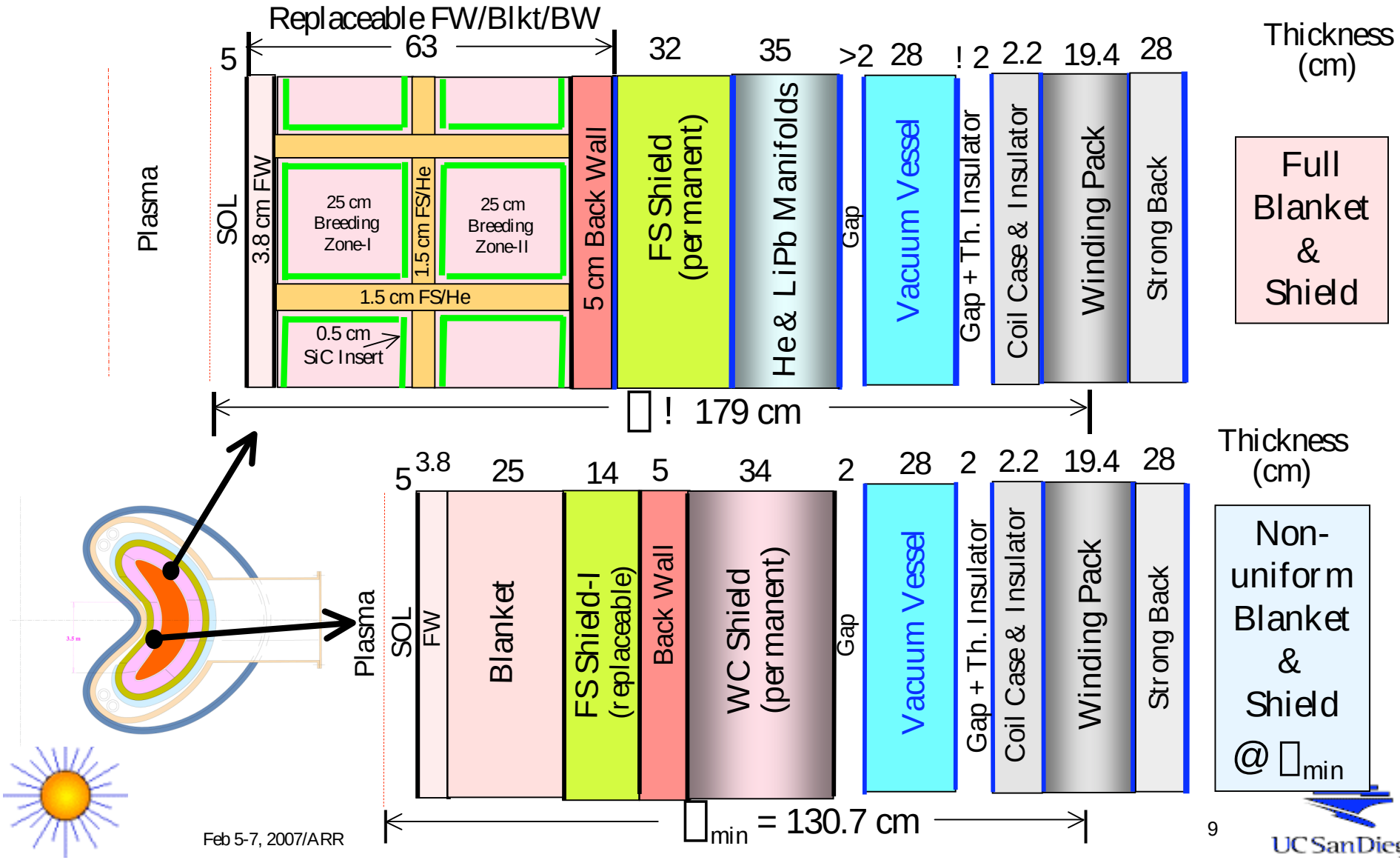

Radial Build Satisfies Design Requirements

Overall TBR: (for T self-sufficiency)	1.1 *
Damage to Structure: (for structural integrity)	200 dpa - RAFS 3% burnup - SiC
Helium Production @ Manifolds and VV: (for reweldability of FS)	1 He appm
S/C Magnet (@ 4 K):	
- Peak fast n fluence to Nb_3Sn (E_n > 0.1 MeV):	10^{19} n/cm^2
- Peak nuclear heating:	2 mW/cm^3
- Peak dpa to Cu stabilizer:	6×10^{-3} dpa
- Peak dose to electric insulator:	~ 10^{11} rads
Plant Lifetime:	40 FPY
Availability:	~ 85%

Additional nuclear parameters:

- Overall energy multiplication:	***1.16****
- FW/blanket lifetime:	***3 FPY***

* To be confirmed with ongoing 3-D analysis

Blanket and Power Cycle

Selection Based on Scoping Studies of a Number of Blanket Concepts

1. Dual Coolant concept with a self-cooled Pb-17Li zone and He-cooled RAFS structure.
   - ¥ He cooling needed for ARIES-CS divertor
   - ¥ Additional use of this coolant for the FW/structure of blankets facilitates pre-heating of blankets, serves as guard heating, and provides independent and redundant afterheat removal.
   - ¥ Generally good combination of design simplicity and performance.
   - ¥ Build on previous effort, further evolve and optimize for ARIES-CS configuration
     - Originally developed for ARIES-ST
     - Further developed by EU (FZK)
     - Now also considered as US ITER test module

2. Self-cooled Pb-17Li blanket with SiC_f/SiC composite as structural material.
   - ¥ More compact design (no He), higher efficiency, more attractive safety features (LSA=1), and lower COE.
   - ¥ Desire to maintain this higher pay-off, higher development risk option as alternate to assess the potential of a CS with an advanced blanket

Dual Coolant Blanket Module Redesigned for Simpler More Effective Coolant Routing

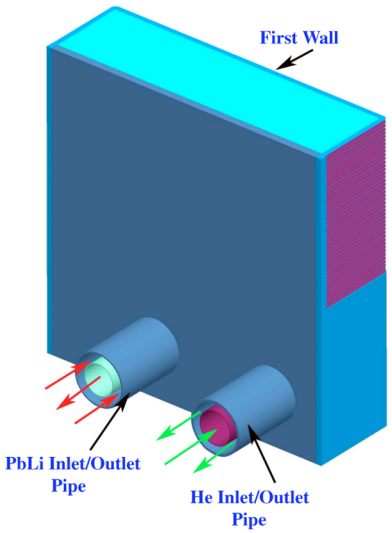

- ¥ 10 MPa He to cool FW toroidally and box
- ¥ Slow ßowing (<10 cm/s) Pb-17Li in inner channels
- ¥ RAFS everywhere (T_{max}<550¡C)
- ¥ Additional layer of ODS-FS on FW (T_{max}<700¡C)

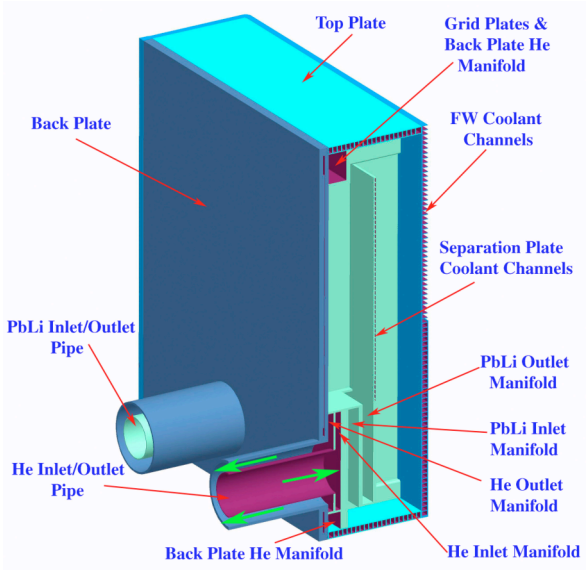

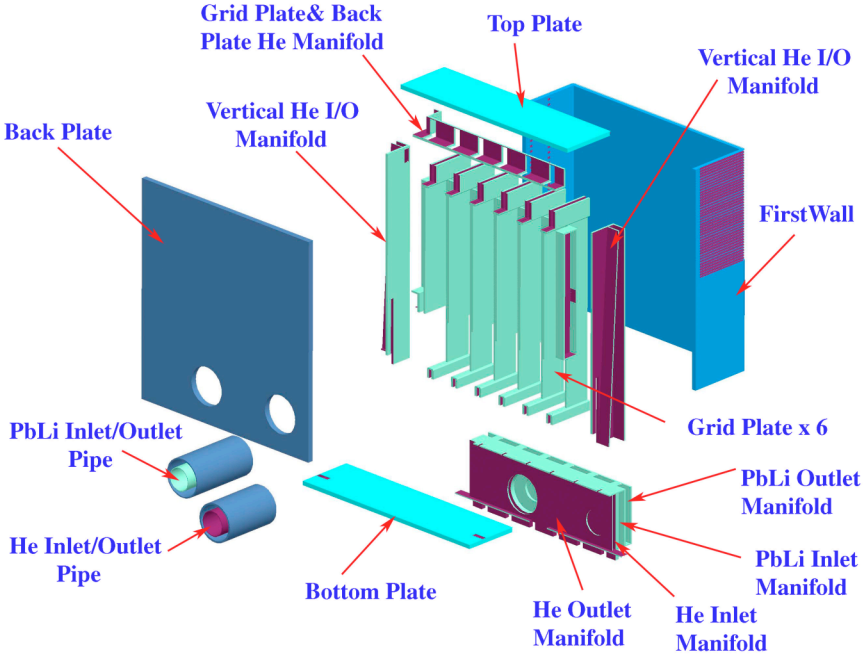

- ¥ SiC insulator lining Pb-17 Li channel for thermal and electrical insulation to maximize $T_{Pb\text{-}17Li}$ and minimize MHD □P while accommodating compatibility limit $T_{FS/Pb\text{-}17Li}$ <500¡C

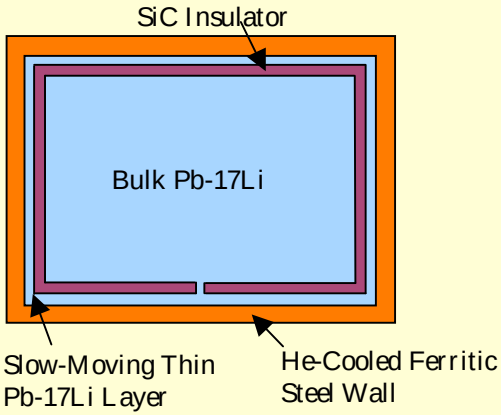

Coolant Routing Through HX Coupling Blanket and Divertor to Brayton Cycle

¥Min. ΔT_{HX} = 30¡C

¥$P_{Friction}$ ~ Δ_{pump} x P_{pump}

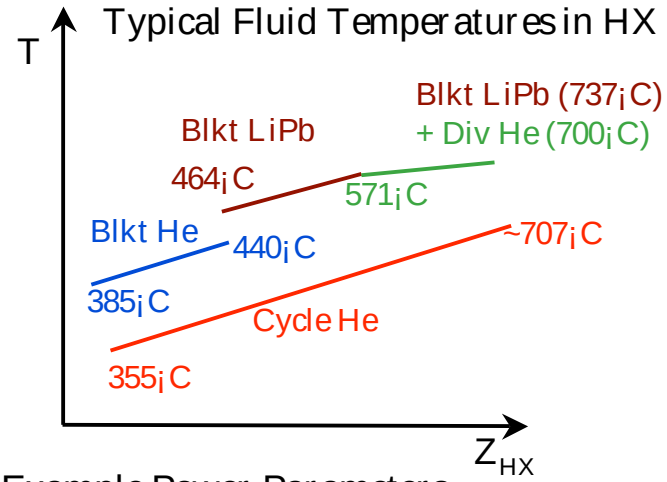

Example Power Parameters

Fusion Thermal Power in Reactor Core	2640 MW
Friction Thermal Power in Blkt He	153 MW
Friction Thermal Power in Div He	24 MW
Total Fusion + Friction Thermal Power	2817 MW
Thermal Power Removed by Pb-17Li (including ~113 MW reduction due to conducted power to He)	1323 MW
Tot. Thermal Power Removed by Blkt He	1305 MW
Thermal Power Removed by Div He	185 MW
Brayton cycle efÞciency	0.43

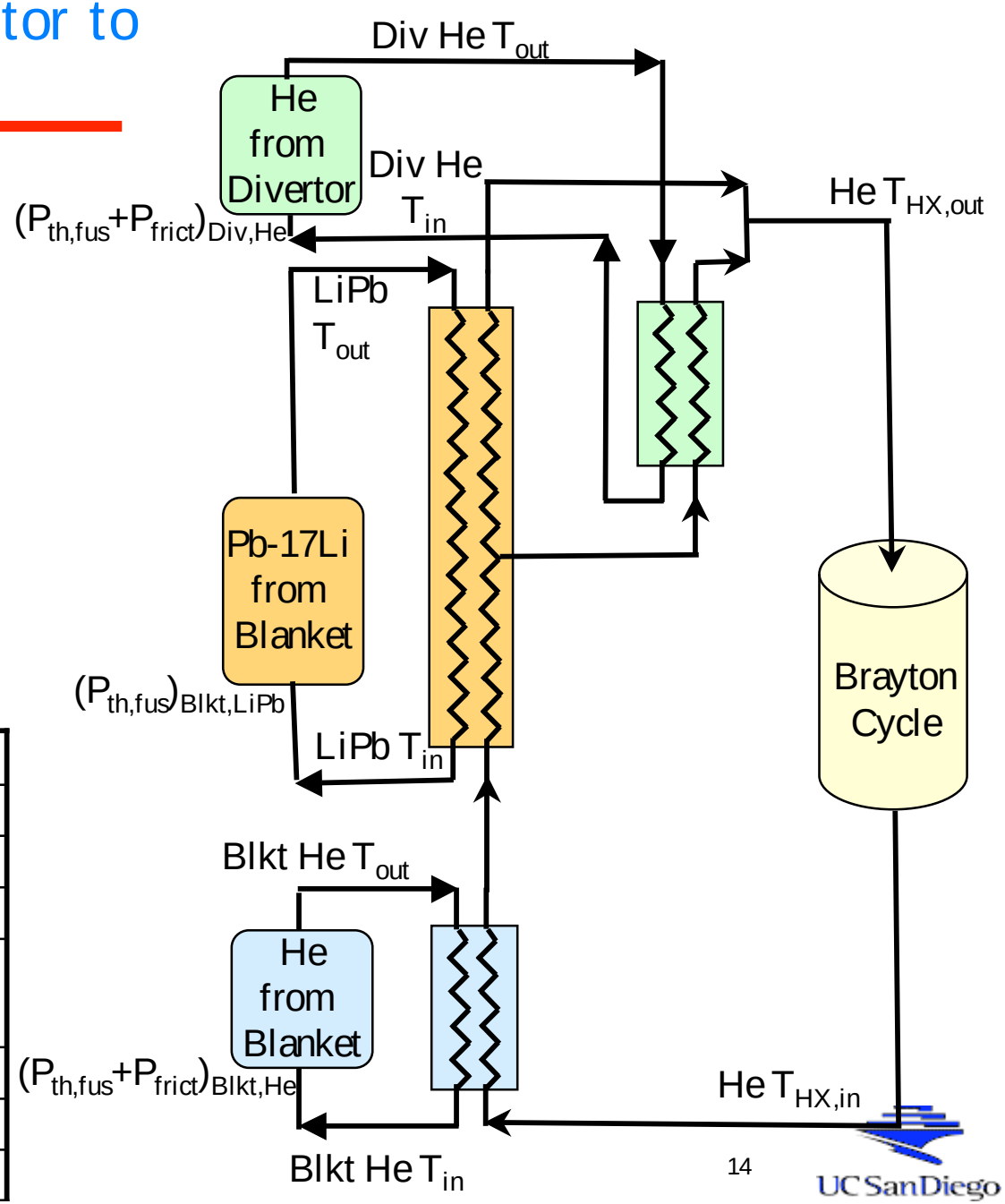

UC San Diego

Optimization of DC Blanket Coupled to Brayton Cycle Assuming a FS/Pb-17Li Compatibility Limit of 500¡C and ODS FS for FW

¥RAFS T_{max} < 550¡C; ODS T_{max} <700¡C

¥The optimization was done by considering the net efficiency of the Brayton cycle for an example 1000 MWe case.

- 3-stage compression + 2 inter-coolers and a single stage expansion
- $\eta_{Turbine}$ = 0.93; $\eta_{Compressor}$ = 0.89; $\eta_{Recuperator}$ = 0.95; Total comp. ratio < 3.5

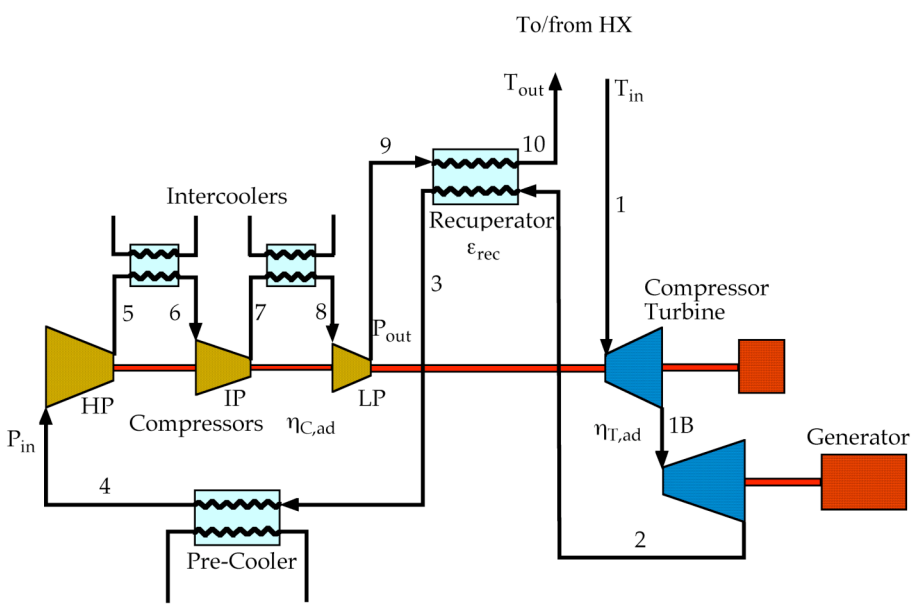

Example Trade-Off Study: Efficiency v. neutron wall load

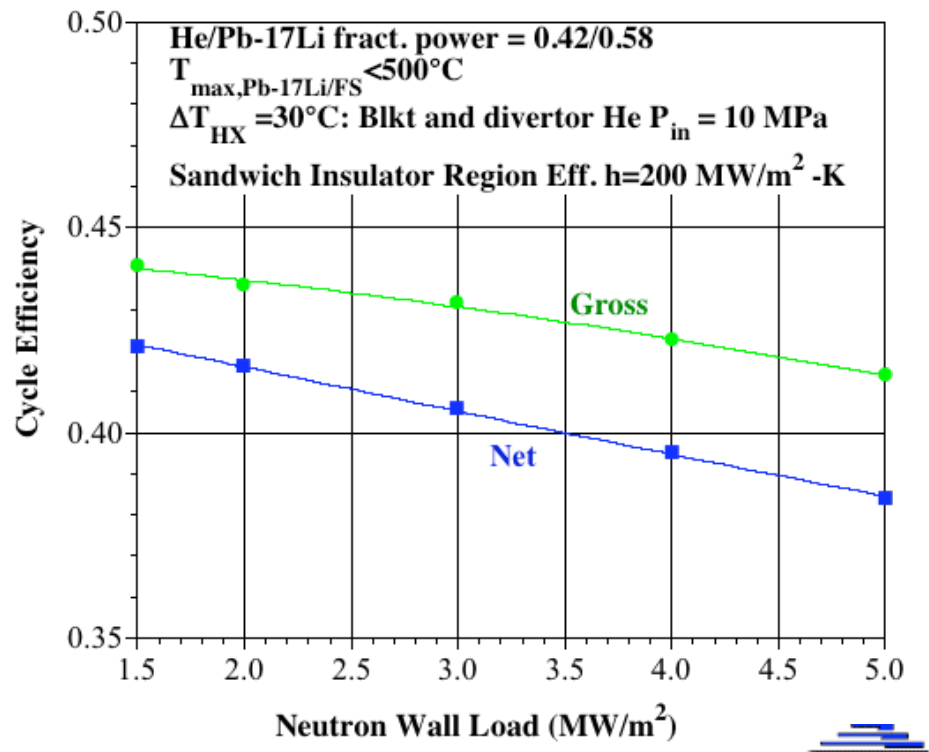

Challenging to Design Blanket FW/Module Within Stress Limits for High Heat Flux and Neutron Wall Load Location

Alloy	T (ûC)	S_m (MPa)	3 S_m (MPa)
F-82H	500	133	399
	550	118	354
	600	101	303
ODS LAF-3	500	268	804
	650	133	399
	700	111	333
ODS 12YWT	500	! 500	! 1500
	550	! 460	! 1380
	600	! 420	! 1260
	650	! 220	! 660
	700	! 210	! 630
	750	! 170	! 510
	800	! 155	! 465

q'' (MW/m^2)	0.5	0.76	0.76	0.76	0.76
NWL (MW/m^2)	2.6	2.6	2.6	2.6	5.2
Ref. T (°C)	369	369	369	432	369
He P (MPa)	10	10	0	10	10
Max. temp. of ODS-FS (°C)					~644
Max. stress in ODS-FS (MPa) (Plane strain)	487	635	590	533	667
Max. stress in ODS-FS (MPa) (Plane stress)	449	458	307	458	
Max. temp. of RAFS (°C)					~560
Max. stress in RAFS (MPa) (Plane strain)		~350			~390

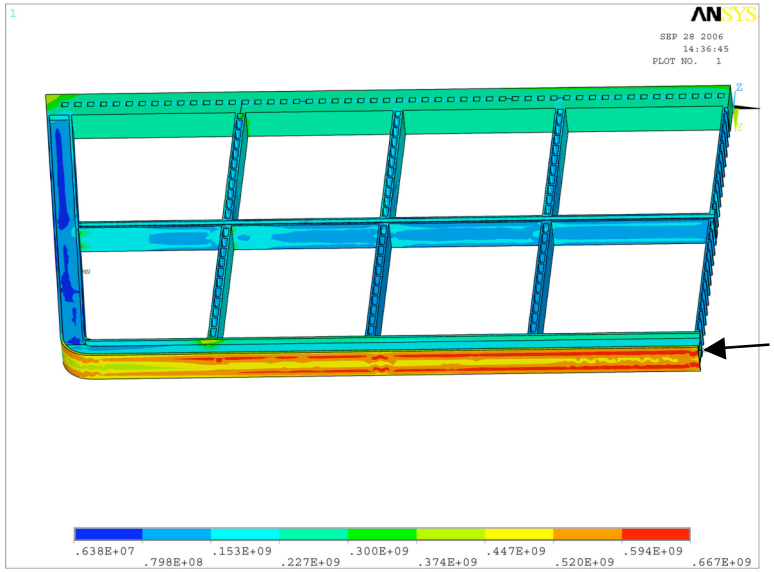

¥Design for:

$\square_{secondary} + \square_{primary} < 3\ S_m$

¥Use 3-mm layer of ODS FS on 1-mm RAFS layer for FW design to help maximize operating temperature and cycle efÞciency.

¥Max. NWL and qÕÕ can be reduced by moving wall back if needed.

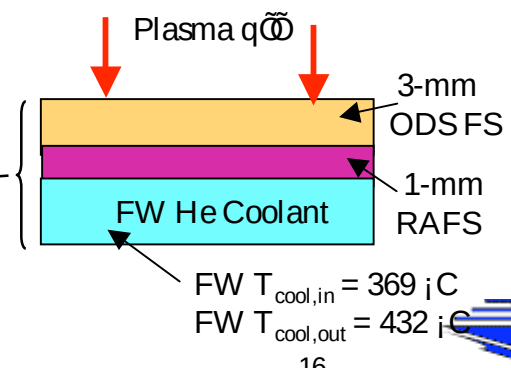

Maintenance Scheme and Integration

Port-Based Maintenance Chosen

(suited for both 2-field and 3-field period configurations)

- Two dedicated ports per field period
  - 4 m high by 1.8 m wide at 0¡ and ~2 m^2 at 35¡ (also used for ECH)
  - Modular design of blanket (~2 m x ~2m x ~0.63 m) and divertor plates (~ 3 m x ~1m x ~0.2 m) compatible with maintenance scheme.
- Vacuum Vessel Internal to the Coils
  - For blanket maintenance, no disassembling and re-welding of VV required and modular coils kept at cryogenic temperatures.
  - Closing plug used in access port.
  - Articulated booms utilized to remove and replace 198 blanket modules and 24 divertor modules (max. combined weight ~5000 kg).

Bird's eye view of 3 field-period configuration showing location of ports

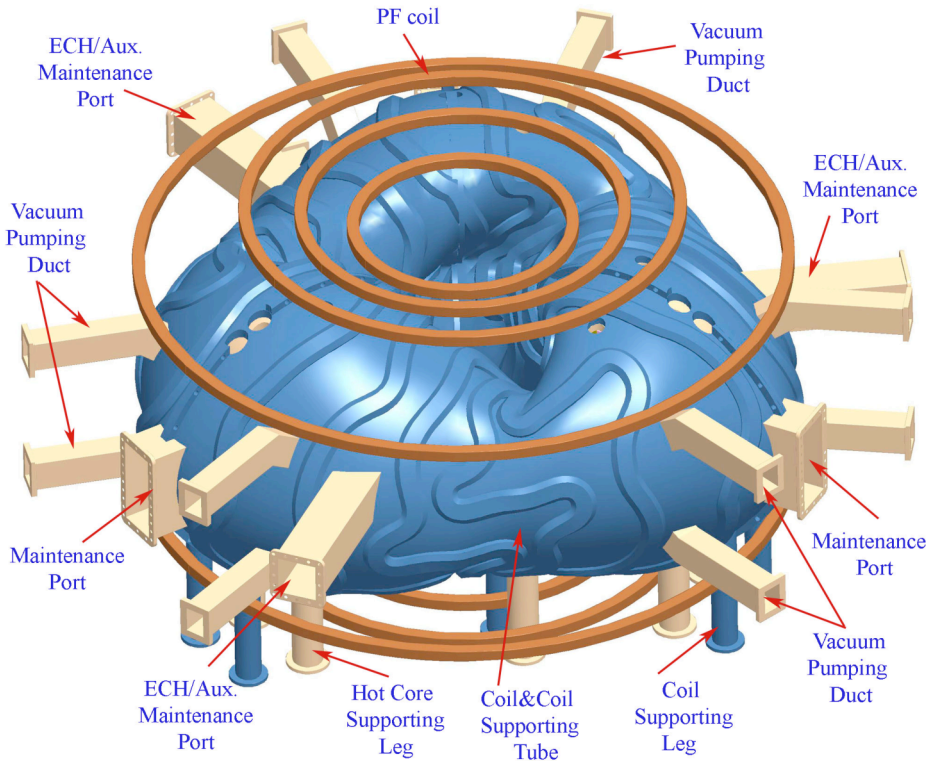

Port Maintenance Design Approach

- Replace all FW/blanket and divertor modules, and ECH launchers every 3 FPY. Remainder is life-of-plant.
  - Blanket and divertor modules removable inside core
  - ECH launcher designed as a removable assembly
- All power core maintenance fully robotic and automated based on prototypes and production plants
- Work simultaneously on all three Þeld periods
- Employ maintenance machines inside Þxed port transfer chambers just outside bio-shield
- Pass all used and new modules via airlocks to mobile transporters
- If conventional tube welding is used, auxiliary maintenance machines ports are needed. More advanced scheme with remote disconnects would cut maintenance time by a factor of 4.

Mid-Plane View Shows Maintenance At Main and ECH/Aux Maintenance Ports

- ¥Simultaneous maintenance in 3 FP
- ¥Fixed transfer chambers control contamination and enhance times
- ¥Mobile transporters transfer used and new components to/from Hot Cell
- ¥Main port is used for removing blanket and divertor modules
- ¥ECH launcher/waveguide removed as an assembly
- ¥ECH port can then be used as auxiliary maintenance port
- ¥Manipulators inside bioshield at center of power core remove divertor inner tubes and shielding and cut outer divertor tube/support

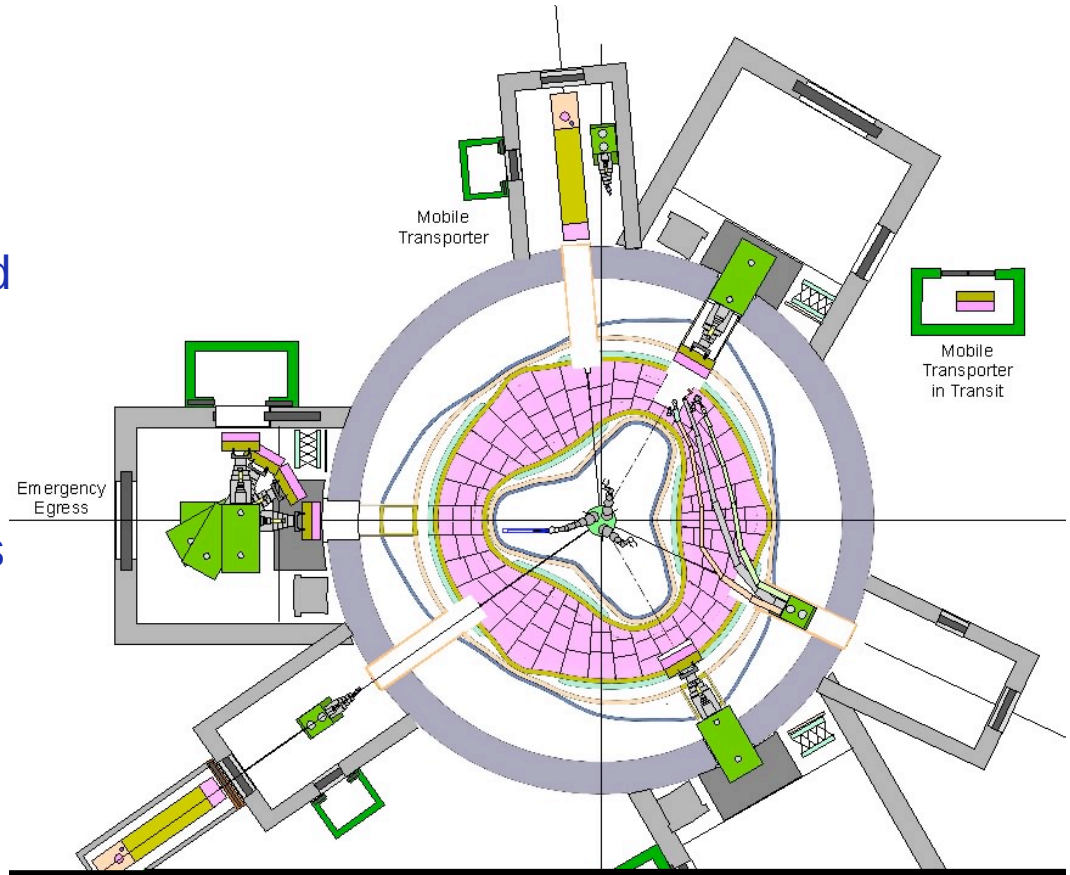

[redacted]

Maintenance study indicates possibility of 85% availability